ATP INDEX

COPYRIGHT © 2002

COPYRIGHT IS NOT CLAIMED AS TO ANY PART OF AN ORIGINAL WORK PREPARED BY A UNITED STATES GOVERNMENT OFFICER OR EMPLOYEE AS PART OF THAT PERSONS OFFICIAL DUTIES OR BY ANY OTHER THIRD PARTY OFFICER OR EMPLOYEE AS PART OF THAT PERSONS DUTIES.

"ATP" is a registered trademark of Aircraft Technical Publishers. All original authorship of ATP is protected under U.S. and foreign copyrights and is subject to written license agreements between ATP and its Subscribers.

ALL RIGHTS RESERVED. NO PART OF THIS PUBLICATION MAY BE REPRODUCED, STORED IN A RETRIEVAL SYSTEM, OR TRANSMITTED IN ANY FORM BY ANY MEANS, ELECTRONIC, MECHANICAL, PHOTOCOPYING, RECORDING OR OTHERWISE, WITHOUT PRIOR WRITTEN PERMISSION OF THE PUBLISHER.

Aircraft Technical Publishers
101 South Hill Drive
Brisbane, CA 94005

Customer Service
6AM-5PM PST M-F
(800)227-4610

ATP Grid Index to Manufacturer's Publications:

Sabreliner Corp.
NA-265-80 380-1 & UP
Wiring Diagram Manual

Section	Topic
	General Information
	Title Page
	List of Chapters (Table of Contents)
	Manufacturer's Introduction
	Record of Revisions
	Record of Temporary Revisions
	Letter of Transmittal (Highlights of Changes)
	List of Effective Pages
	Service Bulletin List
	Relay Terminal Identification
	Wiring Diagram Cross Reference
	Component Location
	Wiring Diagram Index
	Airframe Systems
20.00.00	Standard Practices - Airframe
20.00.00	General
20.00.00	Description
21.00.00	Air Conditioning
21.20.00	Distribution
21.20.01	Foot Heaters System
21.30.00	Pressurization Control
21.30.01	Cabin Pressure & Temperature Control and Warning
21.30.01	Cockpit & Cabin Temperature Control and Warning
21.30.02	Door Seal and Lock Indicator System
21.30.03	Nose Ground Cooling Blower and Pressure Failure System
21.30.04	Cabin Press, Warning Signs, Oxy Flow & Oxy Press Systems

Copyright ® Aircraft Technical Publishers

Section	Topic
21.30.05	Vacuum Pump
21.50.00	Cooling
21.50.01	Three Wheel Cooling Package
21.60.00	Temperature Control
21.60.01	Aft Fuselage Overheat Indicating System
23.00.00	Communications
23.00.00	General
23.00.01	Audio System Provisions
23.00.02	Avionics Antenna Provisions
24.00.00	Electrical Power
24.20.00	AC Generation
24.20.01	AC Inverter System
24.20.02	AC Inverter System - Solid State Inverter
24.30.00	DC Generation
24.30.01	DC Generator System
24.30.02	Battery Temperature Indicating and Control
24.30.07	Battery Temperature Indicating and Control
24.50.00	Electrical Load Distribution
24.50.01	DC Bus Tie-In System
24.50.02	DC Power Distribution System
24.50.03	AC Power Distribution System
24.50.04	AC Instrument and Indirect Lighting System
24.50.05	Electrical Ground System
26.00.00	Fire Protection
26.10.00	Detection
26.10.01	Engine Fire Detector System
26.20.00	Extinguishing
26.20.01	Engine Fire Extinguisher System
27.00.00	Flight Controls
27.00.00	General
27.00.01	Trim Position Indicating System
27.00.02	Flap Control and Position Indicating Systems
27.00.03	Flight Control Trim System
27.00.04	Control Wheel and Column
27.40.00	Horizontal Stabilizer
27.40.01	Trim Disconnect System
27.60.00	Spoiler, Drag Devices, and Variable Aerodynamic Fairings

Copyright ® Aircraft Technical Publishers

Section	Topic
27.60.01	Speed Brake System
28.00.00	Fuel
28.10.00	Storage
28.10.01	Fuel Drain Recovery System
28.20.00	Distribution
28.20.01	Fuel Cross Feed System
28.20.02	Fuel Boost Pump
28.20.02	Fuel Boost System
28.20.03	Fuel Shut-Off System
28.20.04	Fuel Filter Warning System
28.40.00	Indicating
28.40.01	Fuel Boost Warning System
28.40.02	Fuel Flow Indicating System
28.40.03	Fuel Quantity Indicating System
29.00.00	Hydraulic Power
29.10.00	Main
29.10.01	Hydraulic Pump System
29.30.00	Indicating
29.30.01	Hydraulic Pressure Indicating System
30.00.00	Ice and Rain Protection
30.10.00	Airfoil
30.10.01	Pneumatic Boot System
30.20.00	Air Intakes
30.20.00	Ram Air Inlets Anti-Ice System
30.30.00	Pitot and Static
30.30.01	Pitot Heat System
30.40.00	Windows, Windshields, and Doors
30.40.01	Windshield & Side Windows Anti-Ice Control System
30.40.01	Windshield Anti-Ice Power System
30.40.02	Windshield Wiper System
31.00.00	Indicating/Recording Systems
31.00.00	General
31.00.01	Instrument Panel Vibrators
31.00.02	Hourmeter
32.00.00	Landing Gear
32.00.00	General

Copyright ® Aircraft Technical Publishers

Section	Topic
32.00.01	Landing Gear Control System
32.10.00	Main Gear and Doors
32.10.01	Modulating Anti-Skid Control System
32.50.00	Steering
32.50.01	Nose Gear Steering System
32.60.00	Position and Warning
32.60.01	Landing Gear Position Indicating and Warning System
33.00.00	Lights
33.10.00	Flight Compartment
33.10.01	Caution Warning and Indicator Lights Dim and Test System
33.10.02	Engine, Radio, and Instrument Indirect Lights System
33.10.03	Cockpit Dome, Map, and Utility Lighting Systems
33.10.04	Flood Light System
33.10.05	Console Indirect Lighting System
33.10.06	Standby Compass, Pedestal, Overhead and LH Outboard Instrument Panel Indirect Light System
33.20.00	Passenger Compartment
33.20.01	Cabin Entrance and Passenger Reading Lights (Provisions)
33.20.03	Dome, Coat, and Baggage Compartment Lighting Systems
33.30.00	Cargo and Service Compartments
33.30.01	Aft Fuselage Compartment Lighting System
33.40.00	Exterior
33.40.01	Thunderstorm Lights System
33.40.02	Landing and Taxi Light System
33.40.03	Position and Anti-Collision Lights System
33.40.04	Ice Check Light System
33.40.05	High Intensity Lights
33.50.00	Emergency Lighting
33.50.01	Emergency Lighting System
34.00.00	Navigation
34.00.00	General
34.00.01	Magnetic Compass Provisions
34.10.00	Flight Environment Data
34.10.01	Free Air Temperature Indicating System
34.10.02	Mach Airspeed Warning System
34.10.03	Stall Warning System (RH)
34.10.03	Stall Warning System (LH)
34.20.00	Attitude and Direction
34.20.01	Turn and Slip Indicators - Pilot's and Co-Pilot's

Copyright ® Aircraft Technical Publishers

Section	Topic
49.00.00	Airborne Auxiliary Power
49.00.00	General
49.00.01	Auxiliary Power Unit System

Power Plant

71.00.00	Power Plant
71.00.00	General
71.00.01	Engine Pylon - Firewall Disconnects, LH
71.00.01	Engine Pylon - Firewall Disconnects, RH
74.00.00	Ignition
74.10.00	Electrical Power Supply
74.10.01	Engine Ignition System
75.00.00	Air
75.10.00	Engine Anti-icing
75.10.01	Engine Anti-Ice System
77.00.00	Engine Indicating
77.00.00	General
77.00.01	Engine Oil Low Pressure Warning
77.10.00	Power
77.10.01	RPM Speed Indicator
77.10.02	Exhaust Temperature Indicating System
77.10.03	Engine Pressure Ratio System
77.20.00	Temperature
77.20.01	Engine Oil Pressure Indicators
77.20.02	Fuel and Oil Temperature Indicating System
78.00.00	Exhaust
78.30.00	Thrust Reverser
78.30.01	RH/LH Engine Thrust Reverser Control System
78.30.02	Thrust Reverser Indicating System
80.00.00	Starting
80.20.00	Starting
80.20.01	Engine Start System

Copyright ® Aircraft Technical Publishers

Section	Topic

*** End of Index ***

Copyright ® Aircraft Technical Publishers

MFG.

INTRO

Report No. SR-73-26

Sabreliner Wiring Diagram Manual

Model NA 265-80
(S/N 380-1 and Subs)

ORIGINAL ISSUE: 1 OCT 1973
REVISED: 30 MAY 1990 — REVISION NO. 15

Sabreliner®
CORPORATION

© COPYRIGHT, 1990 BY SABRELINER CORPORATION

RECORD OF REVISIONS

MFG REV NO	DESCRIPTION	ISSUE DATE	ATP REV DATE	INSERTED BY
15	See Highlights	5/30/90	6/20/90	ATP/JLB

REVISION LOG

Manual Control No: _____ Assigned To: _____

Manual Located At: _____

REV. NO.	Basic/ Rev. Date	Insertion Date	Inserted By (Initial)	Remarks
0	Oct 01/73			Basic Issue
1	Sep 30/74			
2	Oct 06/75			
3	Nov 25/77			
4	Nov 10/78			
5	May 30/80			
6	Jan 15/81			
7	Jun 05/81			
8	Apr 15/83			
9	Feb 03/84			
10	Jan 16/86			
11	Jan 09/87			
12	Nov 23/87			
13	Feb 2/88			
14	May 31/89			
15	May 30/90	6-20-90	JLB	

© COPYRIGHT, 1990 BY SABRELINER CORPORATION

RECORD OF TEMPORARY REVISIONS

TEMP REV NO	DESCRIPTION	ISSUE DATE	ATP REV DATE	INSERTED BY	DATE REMOVED	REV INCORP	REMOVED BY

IMPORTANT

READ THIS NOTICE ! ! !

REVISION NOTICE
30 MAY 1990

SABRELINER
WIRING DIAGRAM MANUAL

MODEL NA 265-80

REVISION INSTRUCTIONS

This is the latest revision dated May 30, 1990, Revision No. 15 to your Sabreliner Wiring Diagram Manual, Report No. SR-73-26. Insert latest revised pages, remove and destroy superseded pages.

This revision changes chapter 27 the Flaps Position Indicating System and incorporates engineering changes in chapter 78, Thrust Reverser System changed by SOK 28. Please note that new vertical and horizontal zones are being added to all new and revised wiring diagrams. These new zones will aid the technician in locating referenced components.

When revising your manual, the List of Effective Pages appearing in the front of the manual should be used as a cross reference for removing obsolete pages and inserting new and/or revised material. This ensures that only the latest material remains in the manual.

Sabreliner®
CORPORATION

LIST OF EFFECTIVE PAGES

Chapter/ Section	Page	Date
TITLE PAGE	*	May 30/90
REVISION LOG	1/2*	May 30/90
L.E.P.	1*	May 30/90
	2*	May 30/90
	3*	May 30/90
	4*	May 30/90
FRONTAL-CONTENTS	1/2*	May 30/90
SERVICE PUB. LIST	1	Feb 2/88
	2	May 31/89
	3/4	Jan 9/87
INTRO-CONTENTS	1/2*	May 30/90
INTRODUCTION	1	Jun 5/81
	2	Jun 5/81
	3	Jun 5/81
	4	Jun 5/81
	5	Jun 5/81
	6*	May 30/90
	7	Jun 5/81
	7A	Jun 5/81
	7B*	May 30/90
	8	Jan 16/86
	9	Jun 5/81
	10	Jun 5/81
	11	Jun 5/81
	12	Jun 5/81
	13	Jun 5/81
	14	Jun 5/81
	15	Jun 5/81
	16	Jun 5/81
	17	Jun 5/81
	18	Jun 5/81
	19	Jun 5/81
	20	Jun 5/81
	21	Jun 5/81
	22	Jun 5/81
	23	Jun 5/81
	24	Jun 5/81
	25	Jun 5/81
	26	Jun 5/81
	27	Jun 5/81
	28	Jun 5/81
	29/30	Jun 5/81
20-S.E.P. CONTENTS	1/2	Nov 23/87

Chapter/ Section	Page	Date
20-00-0 STANDARD ELECTRICAL PRACTICES	1	Jun 5/81
	2	Jun 5/81
	3	Jun 5/81
	4	Jun 5/81
	5	Jun 5/81
	6	Jun 5/81
	7	Jun 5/81
	8	Jun 5/81
	9	Jun 5/81
	10	Jun 5/81
	11	Jun 5/81
	12	Jun 5/81
	13	Jun 5/81
	14	Jun 5/81
	15	Jun 5/81
	16	Jun 5/81
	17	Jun 5/81
RELAY TERMINAL IDENTIFICATION	1	Jun 5/81
	2	Jun 5/81
	3	Jun 5/81
	4	Jun 5/81
	5	Jun 5/81
	6	Jun 5/81
	7	Jun 5/81
	8	Jun 5/81
	9	Jun 5/81
	10	Jun 5/81
	11	Jun 5/81
	12	Jun 5/81
	13	Jun 5/81
	14	Jun 5/81
	15	Jun 5/81
	16	Jun 5/81
	17	Jun 5/81
	18	Jun 5/81
	19	Jun 5/81
	20	Jun 5/81
	21	Jun 5/81
	22	Jun 5/81
	23	Jun 5/81
	24	Jun 5/81
	25	Jun 5/81
	26	Jun 5/81
	27	Jun 5/81
	28	Jun 5/81
	29	Jun 5/81
	30	Jun 5/81

* The asterisk indicates pages revised, added, or deleted by the current revision.

© COPYRIGHT, 1990 BY SABRELINER CORPORATION

LIST OF EFFECTIVE PAGES (Continued)

Chapter/ Section	Page	Date
WIRING DIAGRAM CROSS REFERENCE	1	Nov 23/87
	2	Jan 9/87
	3	Jan 9/87
	4	Jan 9/87
COMPONENT LOCATION	1	May 31/89
	2	May 31/89
	3	May 31/89
	4	May 31/89
	5	May 31/89
	6	May 31/89
	7	May 31/89
	8	May 31/89
	9	May 31/89
	10	May 31/89
	11	May 31/89
	12	May 31/89
	13	May 31/89
	14	May 31/89
	15	May 31/89
	16	May 31/89
	17	May 31/89
	18	May 31/89
WIRING DIAGRAM INDEX	1	Nov 23/87
	2	Nov 23/87
	3	Nov 23/87
	4	Nov 23/87
	5/6	Nov 23/87
21-20-1	1	Jun 5/81
21-30-1	1/2	Jun 5/81
	3/4	Jun 5/81
	5/6	Jun 5/81
	7	Jun 5/81
21-30-2	1	Jun 5/81
21-30-3	1	Feb 3/84
21-30-4	1/2	Jun 5/81
	3/4	Jun 5/81
	5/6	Jun 5/81
	7	Jun 5/81
21-30-5	1/2	Jun 5/81
	3	Jun 5/81
21-50-1	1	Jun 5/81
21-60-1	1	Jun 5/81
23-00-1	1	Jun 5/81
23-00-2	1	Jun 5/81
24-20-1	1/2	Apr 15/83
	3/4	Apr 15/83
	5/6	Jun 5/81
	7	Jun 5/81
24-20-2	1/2	Jun 5/81
	3/4	Jun 5/81
	5	Jun 5/81
24-30-1	1/2	Jun 5/81
	3/4	Jun 5/81
	5/6	Jun 5/81
	7/8	Jun 5/81
	9	Jun 5/81
24-30-2	1/2	Jun 5/81
	3	Jun 5/81
24-30-7	1/2	Jun 5/81
	3	Jun 5/81
24-50-1	1/2	Jan 16/86
	3/4	Jan 16/86
	5/6	Jan 16/86
	7/8	May 31/89
	9/10	May 31/89
	11/12	May 31/89
24-50-2	1/2	Jan 9/87
	3/4	Jan 9/87
	5/6	Jan 9/87
	7/8	Feb 2/88
	9/10	Jan 9/87
	11/12	Jan 9/87
	13/14	Jan 9/87
24-50-3	1	Jun 5/81
24-50-4	1/2	Feb 3/84
	3	Feb 3/84
24-50-5	1/2	Jun 5/81
	3/4	Jun 5/81
	5/6	Jun 5/81
	7	Jun 5/81
26-10-1	1/2	Jan 9/87
	3/4	Jan 9/87
26-20-1	1/2	Jan 9/87
	3/4	Jan 9/87
27-00-1	1	Jun 5/81
27-00-2	1/2 *	May 30/90
	3/4 *	May 30/90
27-00-3	1/2	Jun 5/81
	3/4	Jun 5/81
	5/6	Apr 15/83

* The asterisk indicates pages revised, added, or deleted by the current revision.

© COPYRIGHT, 1990 BY SABRELINER CORPORATION

LIST OF EFFECTIVE PAGES (Continued)

Chapter/ Section	Page	Date
27-00-3 (Con't)	7/8	Apr 15/83
	9/10	Apr 15/83
	11/12	Jun 5/81
	13/14	Jun 5/81
	15/16	Apr 15/83
	17/18	Apr 15/83
	19	Apr 15/83
27-00-4	1	Jun 5/81
27-40-1	1/2	Jun 5/81
	3	Jun 5/81
27-60-1	1/2	Jun 5/81
	3	Jun 5/81
28-10-1	1/2	Jan 9/87
	3/4	Jan 9/87
	5/6	Jan 16/86
	7/8	Jan 16/86
28-20-1	1/2	Jun 5/81
	3/4	Jun 5/81
	5/6	Jun 5/81
	7	Jun 5/81
28-20-2	1/2	Jan 9/87
	3/4	Jan 9/87
	5/6	Jan 9/87
	7/8	Jan 9/87
28-20-3	1/2	Jun 5/81
	3/4	Jun 5/81
	5/6	Jun 5/81
	7	Jun 5/81
28-20-4	1	Jun 5/81
28-40-1	1/2	Jun 5/81
	3	Jun 5/81
28-40-2	1/2	Jun 5/81
	3	Jun 5/81
28-40-3	1/2	Feb 3/84
	3	Feb 3/84
29-10-1	1/2	Jun 5/81
	3/4	Jun 5/81
	5/6	Jun 5/81
	7/8	Jun 5/81
	9/10	Jun 5/81
	11/12	Jun 5/81
	13/14	Jun 5/81
	15/16	Jun 5/81
	17/18	Jun 5/81
	19/20	Jun 5/81
	21/22	Jun 5/81
	23	Jun 5/81
29-30-1	1	Jun 5/81
30-10-1	1/2	Feb 3/84
	3	Feb 3/84
30-20-1	1/2	Jun 5/81
	3	Jun 5/81
30-30-1	1/2	Jun 5/81
	3	Jun 5/81
30-40-1	1/2	Jun 5/81
	3/4	May 31/89
	5/6	May 31/89
30-40-2	1	Jun 5/81
31-00-1	1/2	Nov 23/87
31-00-2	1/2	Nov 23/87
32-00-1	1/2	Apr 15/83
	3	Apr 15/83
32-10-1	1/2	Feb 3/84
	3/4	Feb 3/84
	5/6	Feb 3/84
	7/8	Feb 3/84
	9/10	Feb 3/84
	11	Feb 3/84
32-50-1	1/2	Feb 3/84
	3/4	Feb 3/84
	5/6	Feb 3/84
	7/8	Feb 3/84
	9/10	Feb 3/84
	10A/10B	Jan 16/86
	10C/10D	Jan 16/86
	10E/10F	Jan 16/86
	10G/10H	Jan 16/86
	10I/10J	Jan 16/86
	11/12	Feb 3/84
	13/14	Feb 3/84
	15/16	Feb 3/84
	17/18	Feb 3/84
	19	Feb 3/84
	21/22	Jan 16/86
	23/24	Jan 16/86
	25/26	Jan 16/86
	27/28	Jan 16/86
	29/30	Jan 16/86
32-60-1	1/2	Feb 3/84
	3/4	Feb 3/84
	4A/4B	Feb 3/84
	5/6	Jan 9/87
	7/8	Jan 9/87
	9/10	Jan 9/87

* The asterisk indicates pages revised, added, or deleted by the current revision.

© COPYRIGHT, 1990 BY SABRELINER CORPORATION

LIST OF EFFECTIVE PAGES (Continued)

Chapter/ Section	Page	Date
33-10-1	1/2	Jan 16/86
	3/4	Jan 16/86
	5/6	Jun 5/81
	7	Jun 5/81
33-10-2	1/2	Jun 5/81
	3	Jun 5/81
33-10-3	1	Jun 5/81
33-10-4	1/2	Jun 5/81
	3	Jun 5/81
33-10-5	1	Jun 5/81
33-10-6	1/2	Jun 5/81
	3	Jun 5/81
33-20-1	1	Jun 5/81
33-20-3	1	Jun 5/81
33-30-1	1	Jun 5/81
33-40-1	1	Jun 5/81
33-40-2	1/2	Jun 5/81
	3/4	Jun 5/81
	5/6	Jun 5/81
	7	Jun 5/81
33-40-3	1	Jun 5/81
33-40-4	1	Jun 5/81
33-40-5	1	Jun 5/81
33-50-1	1	Jun 5/81
34-00-1	1	Jun 5/81
34-10-1	1	Jun 5/81
34-10-2	1	Jun 5/81
34-10-3	1/2	Jun 5/81
	3/4	Jun 5/81
	5/6	Jun 5/81
	7/8	Jun 5/81
	9/10	Jun 5/81
	11	Jun 5/81
34-20-1	1	Jun 5/81
49-00-1	1/2	Nov 23/87
	3/4	Feb 2/88
	5/6	Feb 2/88
	7/8	Feb 2/88
	9/10	Nov 23/87
	11/12	Feb 2/88
49-00-1 (Cont'd)	13/14	Nov 23/87
	15/16	Feb 2/88
	17/18	Feb 2/88
	19/20	Nov 23/87
	21/22	Nov 23/87
	23/24	Nov 23/87
	25/26	Nov 23/87
	27/28	Feb 2/88
	29/30	Nov 23/87
	31/32	Nov 23/87
	33/34	Nov 23/87
	35/36	Nov 23/87
	37/38	Nov 23/87
71-00-1	1/2	Jun 5/81
	3	Jun 5/81
74-10-1	1/2	Jun 5/81
	3	Jun 5/81
75-10-1	1/2	Jun 5/81
	3	Jun 5/81
77-00-1	1	Jun 5/81
77-10-1	1	Jun 5/81
77-10-2	1	Jun 5/81
77-10-3	1/2	Jun 5/81
	3	Jun 5/81
77-20-1	1	Jun 5/81
77-20-2	1/2	Jun 5/81
	3	Jun 5/81
78-30-1	1/2	Apr 15/83
	3/4	Apr 15/83
	5/6	Jan 9/87
	7/8	Jan 9/87
	9/10*	May 30/90
	11/12*	May 30/90
	13/14*	May 30/90
	15/16*	May 30/90
78-30-2	1/2	Jun 5/81
	3/4	Jun 5/81
	5/6*	May 30/90
	7/8*	May 30/90
80-20-1	1/2	Nov 23/87
	3/4	Feb 2/88
	5/6	Nov 23/87
	7/8	Nov 23/87
	9/10	Nov 23/87

* The asterisk indicates pages revised, added, or deleted by the current revision.

© COPYRIGHT, 1990 BY SABRELINER CORPORATION

SERVICE PUBLICATION LIST

The following is a list of Service Publications that are incorporated in this manual. They consist of Service Bulletins (S/B), Service Letters (S/L), and Optional Kits (SOK).

Listed below is a list of the Sabreliner Service Bulletins (S/B) incorporated in this manual.

SERVICE BULLETIN	SUBJECT
71-5	Installation of Auxiliary Power Unit (Solar T-62T-39 Gas Turbine)
73-20	Installation of Pneumatic De-Icer Boot System
74-6	Flight Control — Installation of Trim Disconnect
74-7	Flight Control — Installation of Audio Signal for Horizontal Stabilizer Trim
74-9	Electrical — Addition of Diodes to Protect Audio Warning Signal Generator
74-22	Electrical — Battery Temperature Indicating System Modification
74-29	Auxiliary Power Unit — Fault Indication Wiring Change
75-1	Electrical — Installation of Rectifier in Main Landing Gear Control System
75-2	Engine (G.E. -CF700) — Installation of Fuel Recovery System
75-11	Electrical — Revision of Main Landing Gear Strut Door Position Indicating Switch
75-17	Thrust Reverser (Aeronca) — Installation of Automatic Stow System
75-22	Flight Control — Modification of Trim System
12	Auxiliary Power Unit (APU) — Installation of 68 ohm Resistor for use with Solar APU Control Assembly Part No. 116076-200
13	Electrical Wiring Change to Anti-Collision Light Switch
20	Pylon — Inspection and Modification of Engine Mount for Clearance
28	Electrical — Repositioning and Reconnection of Instrument Inverter Remote Reset Circuit Breaker Relay (K1066)
29	Electrical Wiring Change to Landing Gear Downlock Relays K1069 and K1070 (Thrust Reverser Interlocks)
40	Electrical — Modification of Emergency Windshield Heat System
85-2	Landing Gear — Nose Wheel Steering Test System

© COPYRIGHT, 1988 BY SABRELINER CORPORATION

SERVICE PUBLICATION LIST (Continued)

Listed below is a list of the Sabreliner Service Letters (S/L) incorporated in this manual.

SERVICE LETTER	SUBJECT
26	Electrical — Parallel Connection of Batteries for Engine Starting
34	Electrical — Installation of Engine Fire Warning Bell in Model NA 265-70 and NA 265-80 Aircraft
64	Electrical System — Modification of the Secondary Bus Relay (K568) Electrical Wiring
72	Electrical — Reduction of Amperage Rating of the Cabin Entrance Light Circuit Breaker
81-12	Electrical — Engine Start Switch Improvements
81-23	Electrical — Addition of Suppression Diodes in Fuel Recovery System
82-17	Anti-Ice — Improved Forward Windshields Part Numbers 265-318202-51 and 265-318202-52
83-11	Electrical — Replacement of Battery Isolation Diodes
83-12	APU — Modification to Allow Ground Operation With Both Engines
84-4	Fire Protection — Modification of Engine Fire Warning Annunciation System
85-1	Electrical — Battery Isolation Relay Voltage Transient Suppression

© COPYRIGHT, 1989 BY SABRELINER CORPORATION

SERVICE PUBLICATION LIST (Continued)

Listed below is a list of the Sabreliner Optional Kits (SOK) incorporated in this manual.

OPTIONAL KIT	SUBJECT
6	Electrical — Fuel Recovery System Time Delay Relay Installation
16	Electrical — Addition of Thermoswitch for Ground Cooling Blower Fan in Nose Compartment
17	Electrical — Parallel/Series Battery Engine Start System Modification
20	Flight Controls — Control Wheel Trim Switch Change
25	Electrical — Decrease Electrical System Affect of Hydraulic Pump Starting Transient
26	Fuselage — Installation of Floatation Kits-FAA Airways Inspection Aircraft
27	Electrical — Audio Pitch Trim Time Delay Relay Installation
28	Thrust Reverser — Electrical Control Switch Change and Modification to Related Circuitry
81-4	Electrical — Fuel Boost Pump Control Circuit Improvements

© COPYRIGHT, 1987 BY SABRELINER CORPORATION

FRONTAL

TABLE OF CONTENTS

Chapter/ Section	Latest Rev. Date
INTRODUCTION	Jan 16/86
STANDARD ELECTRICAL PRACTICES	Jun 5/81
RELAY TERMINAL IDENTIFICATION	Jun 5/81
WIRING DIAGRAM CROSS REFERENCE	Nov 23/87
COMPONENT LOCATION	May 31/89
WIRING DIAGRAM INDEX	Nov 23/87
WIRING DIAGRAMS	May 30/90

© COPYRIGHT, 1990 BY SABRELINER CORPORATION

INTRODUCTION

TABLE OF CONTENTS

Subject	Page
General	1
Identification of Wiring Diagrams	1
Page Numbering	3
Wiring Diagram Presentation	3
Wire Identification	3
Reference Designator Index (RDI) Numbers	5
Deleted	
Terminal Board Identification	6
Electrical Symbols	7
Items of Equipment Without Terminal Identification	7
Replacing Wire	7
Revisions	7B
Wiring Diagram Index	7B
Wiring Diagram Cross Reference	7B
Terminal Board and Wire Identification (Figure 1-1)	8
Wire Types (Figure 1-2)	10
Electrical Symbols (Figure 1-3)	12

© COPYRIGHT, 1990 BY SABRELINER CORPORATION

INTRODUCTION

GENERAL

The function of this Wiring Diagram Manual is to illustrate the airplane wiring circuitry to enable trouble shooting and servicing of the electrical systems. Only the installations made in the airplane during manufacture or those installations changed by service bulletins, letters, and optional kits, are included in this manual. After delivery by the completion center to the customer, changes made to the airplane (other than by service bulletins, letters, and optional kits) are not included. Installations (avionic, interiors and etc.) installed by the completion center are furnished as a supplement to this manual.

This manual provides coverage for all Sabre 75A (NA265-80) airplanes, with the exception of specific systems applicable to FAA Airway Inspection airplanes only. Wiring diagrams for those systems which are applicable to FAA Airway Inspection' airplanes only are contained in a supplement to this manual. This manual is to be used in conjunction with Maintenance Manual, Report No. NA69-420.

IDENTIFICATION OF WIRING DIAGRAMS

The title, a three-dash number system, and a page numbering system are employed to identify each wiring diagram. This numbering system is in accordance with the Air Transport Association, Specification No. 100 (ATA-100). The first two dash numbers of the three-dash number are assigned to specific systems in the same manner as the numbering system used in the SABRELINER Maintenance Manual. The page numbers (ie, 24-50-0) of the Wiring Diagram Manual, therefore, correspond to the chapter and section numbers of the Maintenance Manual wherein the system description and maintenance information are found. The first dash number identifies the chapter; the second dash number identifies the section of the chapter; the third dash number provides a numbering system within the Wiring Diagram Manual and <u>does</u> <u>not</u> correspond to the breakout used in the Maintenance Manual;

i.e. 24-50-00

- 00 — Sequence Number
- 50 — Sub-systems (ELECTRICAL LOAD DISTRIBUTION)
- 24 — Chapter Number (ELECTRICAL POWER)

The following chart provides a list of all chapters and their identification in accordance with the ATA-100 specification. The GAMA "Specification for Manufacturers Maintenance Data" contains the same chapter breakdown as the ATA-100 Specification.

© COPYRIGHT, 1981 BY ROCKWELL INTERNATIONAL

CHAPTER NUMBER	TITLE
5	Time Limits/Maintenance Checks
6	Dimensions and Areas
7	Lifting and Shoring
8	Leveling and Weighing
9	Towing and Taxiing
10	Parking and Mooring
12	Servicing
20	Standard Practices
21	Air Conditioning
22	Autopilot
23	Communications
24	Electrical Power
25	Equipment/Furnishings
26	Fire Protection
27	Flight Controls
28	Fuel System
29	Hydraulic Power
30	Ice and Rain Protection
31	Instruments
32	Landing Gear
33	Lights
34	Navigation
35	Oxygen
36	Pneumatic
37	Vacuum
38	Water/Waste
49	Auxiliary Power Unit
51	Structures General
52	Doors
53	Fuselage
54	Nacelles/Pylons
55	Stabilizers
56	Windows
57	Wings
71	Power Plant General
72	Engine
73	Engine Fuel and Control
74	Ignition
75	Air
76	Engine Controls
77	Engine Indicating
78	Exhaust
79	Oil
80	Starting
82	Water Injection
91	Charts

© COPYRIGHT, 1981 BY ROCKWELL INTERNATIONAL

PAGE NUMBERING

Pages within any one specific ATA code are page-numbered consecutively, starting with page 1. Since the wiring diagrams are printed on one side only, page numbers for blank pages are identified on the printed side of each sheet.

WIRING DIAGRAM PRESENTATION

The circuit wiring diagrams give complete wiring information on each circuit in the airplane. All equipment and wire segments and their numbers are shown. The wiring diagrams can be used to determine electrical failure sources and to isolate electrical trouble to definite areas by performing a continuity check between and, where necessary, through major items of equipment. The detailed circuit wiring diagrams include disconnect plugs, terminal boards, switch contact numbers, relay terminals, wire numbers, and pin and socket numbers or letters. With the aid of these diagrams, a point-to-point check can be made on the circuit. On the wiring diagrams, all pins with a dash in front of the pin letter are identified by a lower case letter on the equipment.

Items of equipment on the face of the wiring diagrams are shown in the following conditions:

Electrical power off. External power not connected.

Landing gear down and locked, normal weight on gear.

Engine power levers in full retarded (OFF) position.

Main entrance door open.

WIRE IDENTIFICATION

To aid installation and trouble shooting of wiring, each wire, except shielded wires or high-temperature wires, is identified by a letter-number combination stamped at designated intervals along the entire length of the wire.

The wire identification code contains a unit number (when applicable), a circuit function letter, a wire number, a wire segment letter, a wire size number, and in some cases, a phase letter and a ground kit, or test letter (See figure 1-1).

UNIT NUMBER

When two or more identical items of equipment are installed in the same airplane, the unit number is used to differentiate between wires or cables having the same identification.

CIRCUIT FUNCTION LETTER

The cirucit function letter (P44A20) is used to identify the circuit function. A circuit designation letter is used with circuit function letters "R" and "S". The following table shows the circuits or systems identified by each circuit function letter.

© COPYRIGHT, 1981 BY ROCKWELL INTERNATIONAL

CIRCUIT FUNCTION LETTER	CIRCUIT
C	CONTROL SURFACE
D	INSTRUMENT (other than flight or engine instruments)
E	ENGINE INSTRUMENT
F	FLIGHT INSTRUMENT
G	LANDING GEAR
H	HEATING, VENTILATING AND DEICING
J	IGNITION
K	ENGINE CONTROL (thrust reverser)
L	LIGHTING
M	MISCELLANEOUS
P	DC POWER
Q	FUEL AND OIL
R	RADIO (navigation and communication) RA - Instrument Landing RM - Marker Beacon RN - Navigation RU - UHF Command RX - Recorder RZ - Interphone, Headphone
S	RADAR SN - Navigation SS - Search SX - Recognition (IFF)
V	DC POWER AND DC CONTROL CABLES
W	WARNING AND EMERGENCY (in addition to those listed under other circuits)
X	AC POWER

All wiring in the ac power system is identified by the circuit function letter "X", with a circuit designation letter to indicate phase.

The letters "A," "B," and "C" are applied, in that order, to indicate the phase sequence.

X34A14A - Phase A
X29A14B - Phase B
X5A14C - Phase C
X17A14N - Neutral or ground

NOTE: The letter "I" is never used for circuit or cable identification. This avoids confusion with the numeral one.

- The letter "O" is never used for circuit or wire identification. This avoids confusion with the numeral zero.

© COPYRIGHT, 1981 BY ROCKWELL INTERNATIONAL

WIRE NUMBER

The wire number is used to differentiate between wire runs in a particular electrical system. A different number is used for wire runs not having the same junction or terminal.

WIRE SEGMENT LETTER

The wire segment letter (P44A20) is used to differentiate between wire segments in a particular circuit. A different letter is used for wire segments having a common terminal or connection. A group of wire segments, therefore, makes a wire run.

WIRE SIZE NUMBER

The wire size number (P44A20) identifies the AN or AL size of the wire.

GROUND LETTER (N)

The ground letter (D34B20N) is used at the end of the wire identification code to identify any wire that completes the circuit to ground.

KIT LETTER (M)

The kit letter (D34B20N M)is used when the wire segment or circuit has been modified by a Sabreliner Service Publication. This letter is placed at the end of the wire identification code.

MULTIPLE CONDUCTOR CABLES

The following abbreviations are used as part of the wire number, when specified:

BLU - blue	WHT - white
BLK - black	YEL - yellow
BRN - brown (or tan)	VIO - violet
GRN - green	GY - gray
RED - red	ORN - orange

REFERENCE DESIGNATOR INDEX (RDI) NUMBERS

Each item of electrical equipment appearing on the diagram is assigned a reference designator index (RDI) number appearing next to the component. This RDI number is a letter, number combination depicted as K514. The letter in this case represents a relay. The following list provides a complete listing as to the identification of these letters.

B - Blower, Actuator, Motor, Pump, Shaker, Servo, Synchronizer	E - Antenna, Panel Assembly
C - Capacitor, Filter	G - Generator
D - Inverter	H - Gland, Shell
	J - Receptacle, Jack

© COPYRIGHT, 1981 BY ROCKWELL INTERNATIONAL

K — Relay
L — Detector, Solenoid
M — Indicator, Loadmeter, Accelerometer, Ammeter, Voltmeter, Clock, Altimeter
P — Plug, Shell
R — Resistor, Rheostat, Shunt, Potentiometer
S — Switch
T — Transformer
W — Cable Assembly
Z — Antenna Selector, Transponder
AR — Amplifier, Compensator, Computers, Heater, Speaker
BT — Battery
CB — Circuit Breaker
CM — Computer
CN — Control Unit
CR — Diode, Rectifier
DS — Light Assembly, Sign
FL — Filter
GY — Gyro
HR — Heater Element
KB — Relay Box
LS — Speaker, Horn
MT — Mount, Racks
PS — Power Unit
RE — Receiver
SN — Synchronizer
SS — Sensor
TB — Terminal Board
TM — Timer
TR — Transmitter
TS — Transducer
VR — Voltage Regulator
VV — Valve

RDI numbers are not part numbers. They are used to locate an item in the airplane and aid in finding the correct part number. This may be accomplished by utilizing the Reference Designation Index (RDI) in the Illustrated Parts Catalog (IPC).

TERMINAL BOARD IDENTIFICATION

Two basic types of terminal boards (MS27212 and OP370) are used in the airplane. These terminal boards are identified by a letter-number combination. This number corresponds to the terminal board number which appears on the face of the wiring diagrams, and is usually mounted with the No. 1 stud adjacent to the terminal board identification marking (See figure 1-1).

Terminal board MS27212 has a single row of terminals (studs). Each stud is identified by a number adjacent (right or left) to the stud.

© COPYRIGHT, 1990 BY SABRELINER CORPORATION

Terminal board OP370 has three rows of studs. Each row is identified by the letter "L", "M", or "U". These letters are at the end of the terminal board which has the identification marking. The numbers for the studs are in the "M" row. The first number nearest the letter "M" is the number 1, which applies to the first stud in each row. However, terminal numbers "M1" and "M10" may be replaced with a screw which provides mounting for the terminal board. When this hole is used for mounting, it does not affect the numbering for the remaining terminals (See figure 1-1).

NOTE: When locating a specified stud in the "M" row of terminals, make sure that every stud, including mount boltholes, is counted, start from the letter "M". This will give the correct terminal number.

ELECTRICAL SYMBOLS

For electrical symbols used on wiring diagrams, see figure 1-3.

NOTE: On the wiring diagrams, all pins with a dash in front of the pin letter are identified by a lower case letter on the equipment.

ITEMS OF EQUIPMENT WITHOUTH TERMINAL IDENTIFICATION

There are items of electrical equipment in the airplane having no terminal identification decals on the units; however, the units are identified by part number. Figure 1-4 identifies the terminal points of these items of equipment as shown in the wiring diagrams.

These items of equipment are identified in the index (sheets 1 and 2, figure 1-4) by descriptive nomenclature and part numbers. Note part number of item concerned and refer to the index for correct sheet on which the terminals of the item in question are identified. In each case, an identifying marker has been selected as a locator. Lugs, keyways, beads, and even trade-marks have been used as locators.

REPLACING WIRE

Wire removed from the airplane must be replaced with wire of the same type and gage as that removed. This is important. Wire is selected for a circuit because it can withstand the circuit loads and heat that are the result of the nature of the circuit and its location in the airplane. The gage of the wire is selected to ensure that the wire will be large enough to carry the current load. The type of wire is selected to ensure that heat and voltage will not cause the wire to break down and that RF energy will not be radiated or absorbed by circuits that require shielded wire. Shielded wire should be bonded in the same manner as it was bonded on the removed wire. Various manufacturers may use different materials in the construction of any given type of wire, and the wire may look different, yet all of them satisfy specification requirements. However, regardless of the manufacturer or the external appearance of the wire, the conductor itself is always of the same material for any given type of wire. See figure 1-2 for wire types and an example of the various types of wires.

© COPYRIGHT, 1981 BY ROCKWELL INTERNATIONAL

THIS PAGE LEFT INTENTIONALLY BLANK

© COPYRIGHT, 1981 BY ROCKWELL INTERNATIONAL

REVISIONS

Change symbols are used to identify changes to text and illustrations generated by manual revisions. There are five symbols used in this manual.

Changes within text are identified by a black change bar ▌ located along the outside of the page adjacent to the change. A change bar located by the page number and date indicates a non technical change to the page.

Changes to illustrations and schematics are identified by either pointing fingers ☛ or screen ▒ shading. Changes to notes or other text used on illustrations and schematics are indicated by a change bar located immediately adjacent to the change.

A major change symbol [MAJOR CHANGE] appearing in the lower outer corner of the page indicates that more than 50% of the page has changed.

New pages are indicated by the symbol [NEW] appearing in the lower outer corner of the page.

The manual is provided with a "Revision Log" page which provides a record of revisions by number and date.

WIRING DIAGRAM INDEX

The Electrical Wiring Diagram Index is an alphabetical listing of all wiring diagram titles, listing airplane effectivity, chapter/section, and page.

WIRING DIAGRAM CROSS REFERENCE

The wiring diagram cross reference is provided to assist the technician in rapidly cross referencing from one wiring diagram to another wiring diagram. The letter number (B1.1-1) combination referenced on the wiring diagrams is used to locate the applicable wiring diagram chapter where the item is found. This cross reference chart follows the Relay Terminal Identification section. The new vertical and horizontal zones being added, help the technician pinpoint a reference, example: Zone B2 would mean that the wire or relay reference is on the same diagram at Zone B2, if the reference has a ⬡ or wiring diagram title before the zone number that would be the continuation location of the relay or wire on the referenced wiring diagram.

© COPYRIGHT, 1990 BY SABRELINER CORPORATION

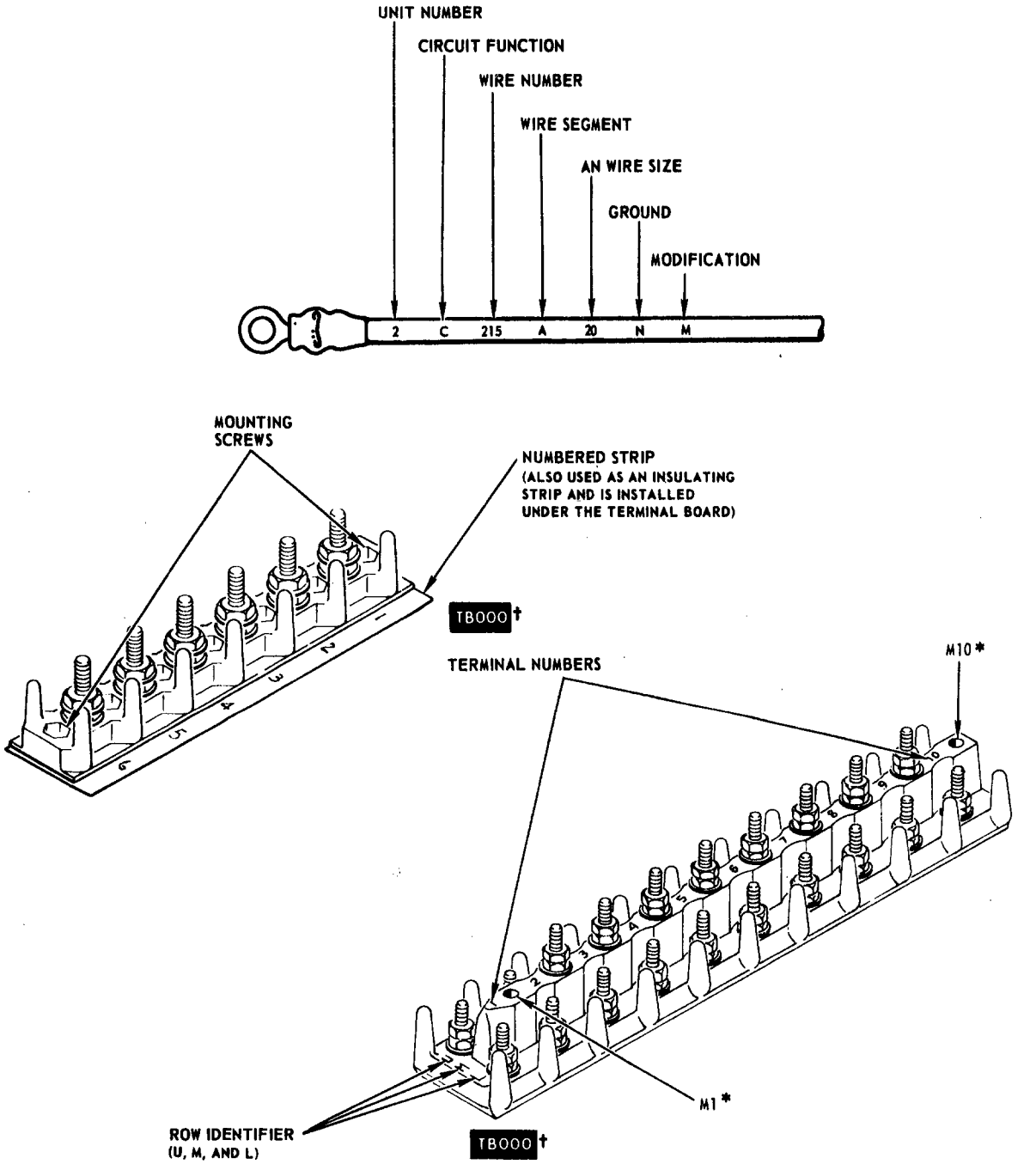

* MAY BE USED AS MOUNTING HOLES

† TERMINAL BOARD IDENTIFIER USUALLY LOCATED ON THE FORWARD, UPPER, OR INBOARD SIDE OF TERMINAL BOARD.

S370-2-34-28

Figure 1-1 Terminal Board and Wire Identification

© COPYRIGHT, 1986 BY SABRELINER CORPORATION

WIRE TYPES

BB-20479 -2 CONDUCTORS (SHIELDED, GAGE NO. 22, COLOR CODED RED AND GREEN.)

BB-20514 -6 CONDUCTORS (NO SHIELDING, GAGE NO. 22, COLOR CODED RED, GREEN, YELLOW, ORANGE, BLUE, AND BROWN.)

CABLES IDENTIFIED APPROXIMATELY EVERY EIGHT INCHES.

MANUFACTURED BY BB ELECTRONIC CORP.
GARDENA, CALIFORNIA

MIL-C-27500

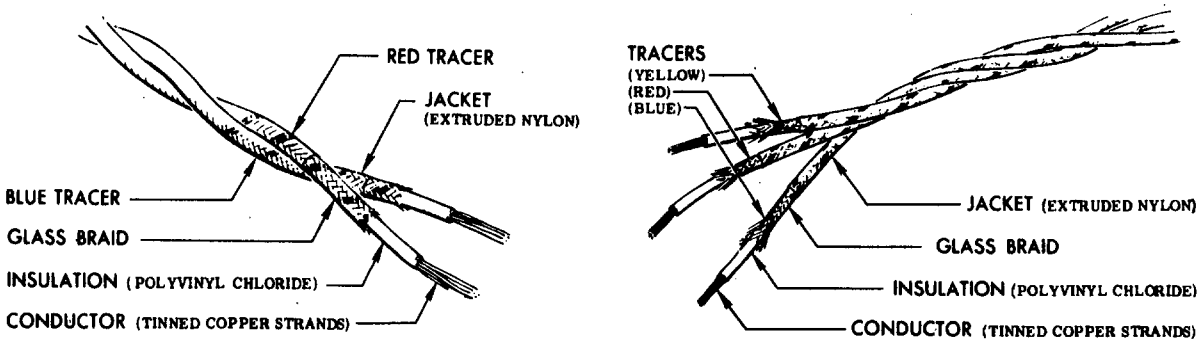

MIL-C-7078A— TYPE II

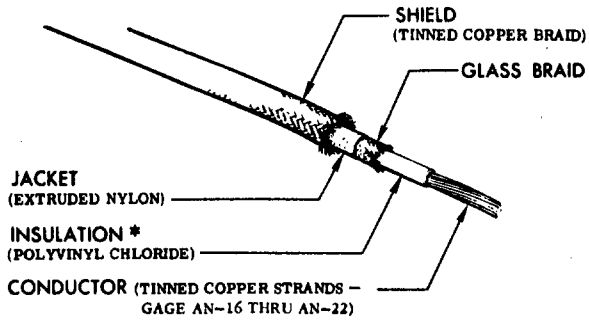

* COLOR CODED

2 CONDUCTORS – RED–BLUE
3 CONDUCTORS – RED–BLUE, YELLOW

5370-2-54-29

WIRE TYPES
Figure 1-2 (Sheet 1 of 3)

© COPYRIGHT, 1981 BY ROCKWELL INTERNATIONAL

WIRE TYPES

MIL-W-3861—TYPE S

AN UNINSULATED SOLID-COPPER WIRE
(TIN COATED—GAGE NO. 16 THRU NO. 22)

MIL-W-5086A-TYPE II

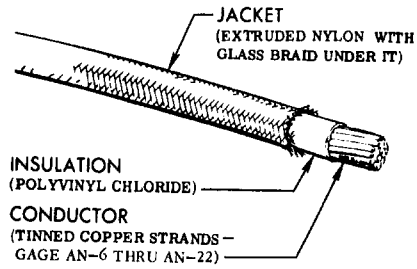

MIL-W-7139B CLASS 1 OR 2 OR MIL-W-22759/1/2

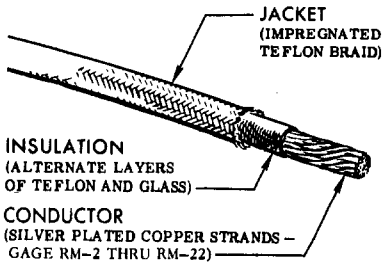

MIL-W-8777A

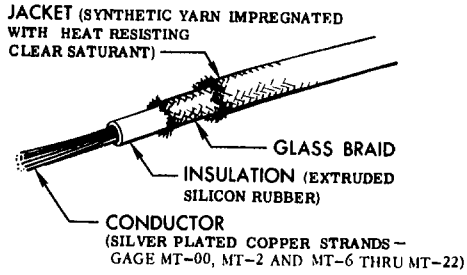

MIL-W-16878C - TYPE B (HOOKUP)

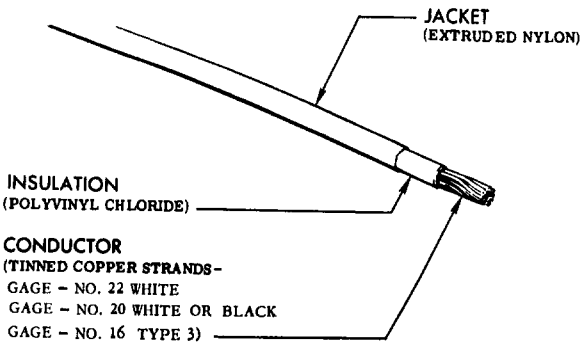

MIL-W-25038B

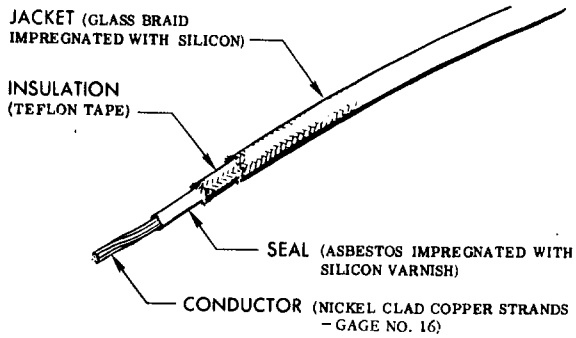

S370-2-54-30A

WIRE TYPES
Figure 1-2 (Sheet 2 of 3)

© COPYRIGHT, 1981 BY ROCKWELL INTERNATIONAL

WIRE TYPES

MIL-C-27500

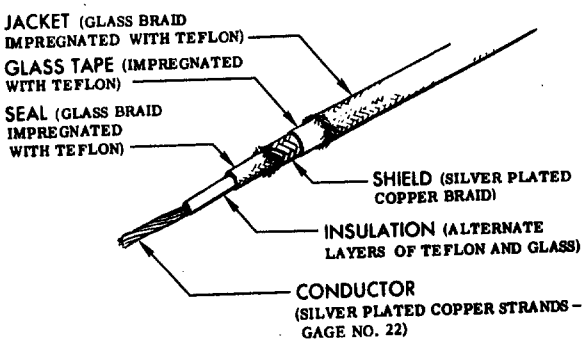

NA2-6115—CLASS 3, TYPE 2

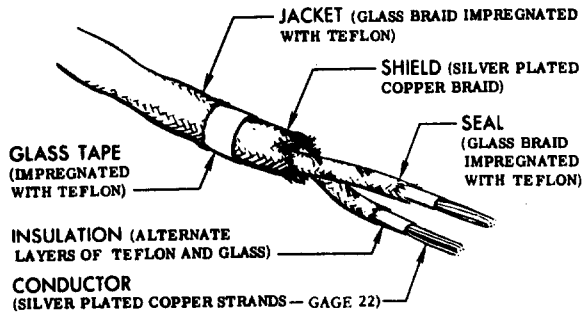

NA2-6115—CLASS 3, TYPE 3

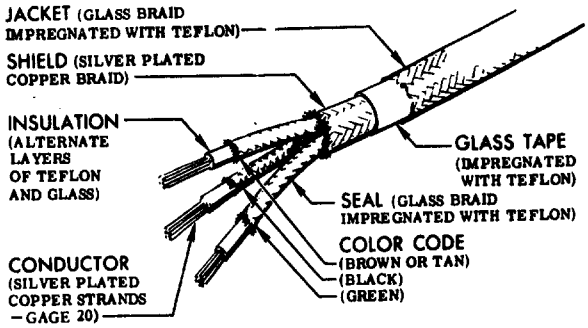

NA SPEC NO.	CLASS	TYPE	MANUFACTURER'S NAME AND ADDRESS
NA2-6115			BOSTON INSULATED WIRE AND CABLE CO, BOSTON, MASS.
	3	1	
	3	2	PACKARD ELECTRIC DIV, GENERAL MOTORS CORP, WARREN, OHIO
	3	3	
			ROCKBESTOS PRODUCTS CORP, NEW HAVEN, CONN.
			TENSOLITE INSULATED WIRE CO, INC, TARRYTOWN, NEW YORK
			WARREN WIRE CO, POWNAL, VERMONT

NOTE WHEN ORDERING WIRE BY NA SPECIFICATION NUMBER DIRECT FROM A LISTED MANUFACTURER, GIVE THE NA SPECIFICATION NUMBER, CLASS, TYPE, AND WIRE SIZE.

S370-2-54-31

WIRE TYPES
Figure 1-2 (Sheet 3 of 3)

© COPYRIGHT, 1981 BY ROCKWELL INTERNATIONAL

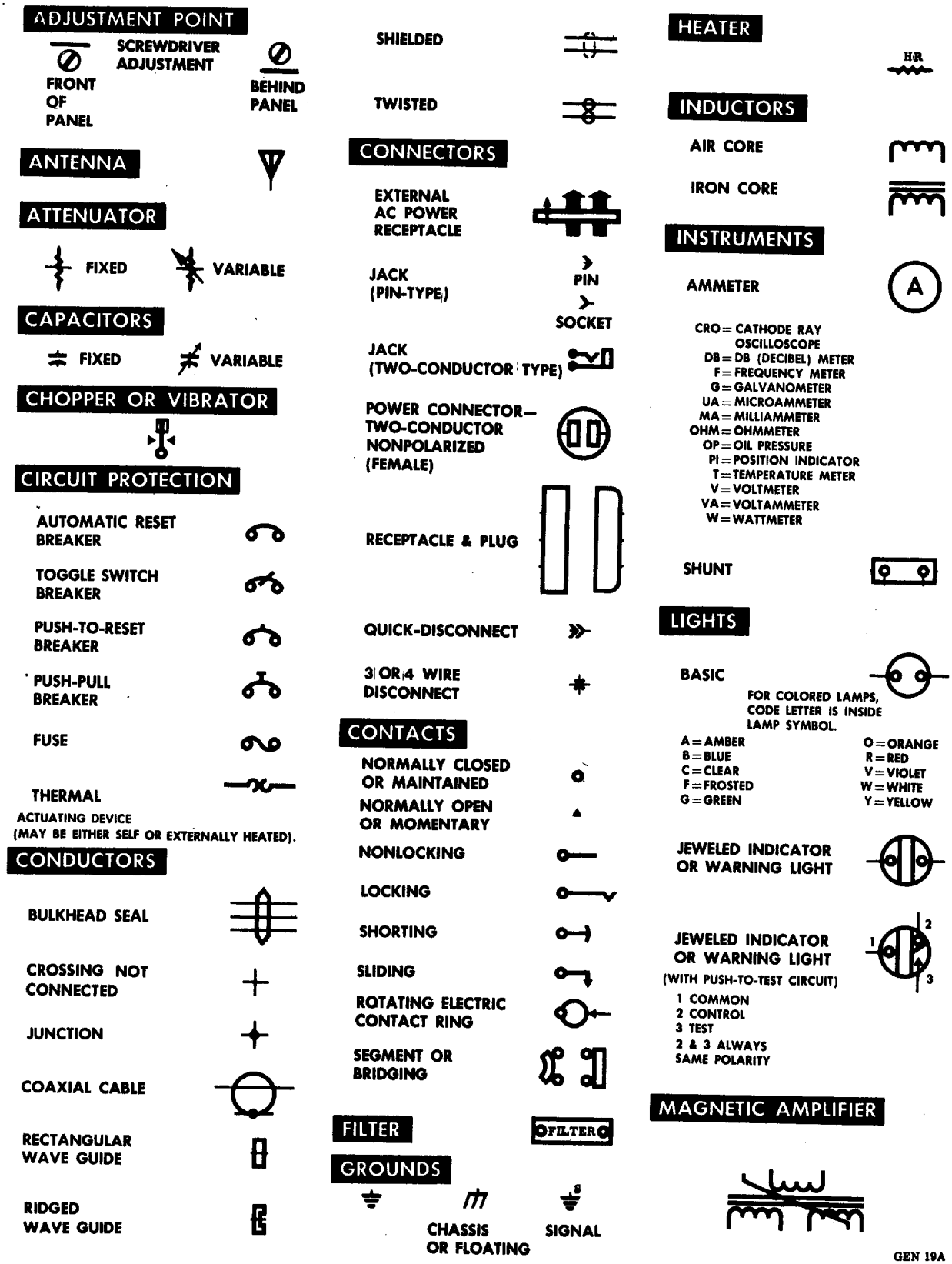

ELECTRICAL SYMBOLS
Figure 1-3 (Sheet 1 of 3)

© COPYRIGHT, 1981 BY ROCKWELL INTERNATIONAL

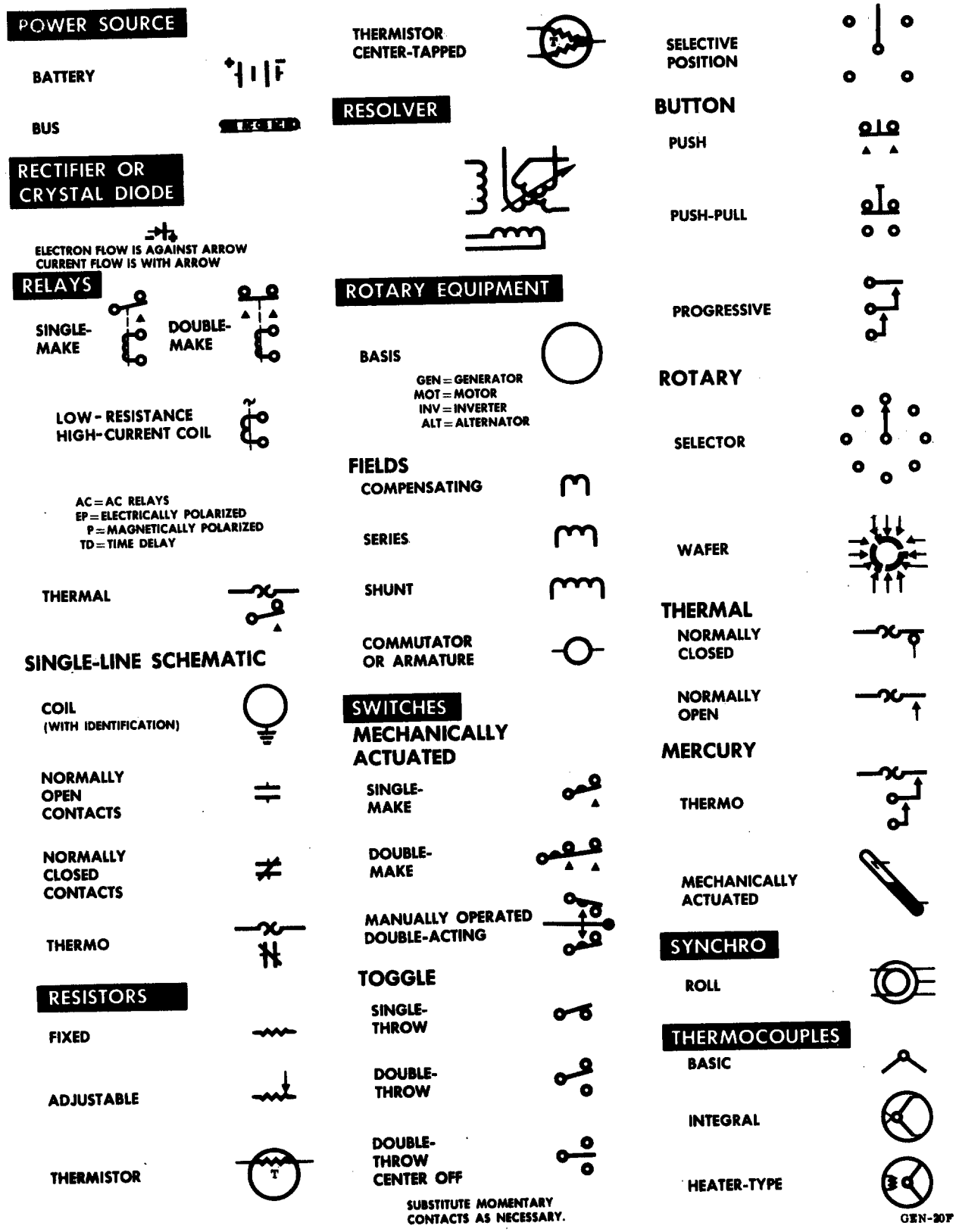

ELECTRICAL SYMBOLS
Figure 1-3 (Sheet 2 of 3)

© COPYRIGHT, 1981 BY ROCKWELL INTERNATIONAL

TRANSFORMERS

GENERAL

IRON CORE

CURRENT TRANSFORMER

VACUUM TUBES

ANODE

GRID

CATHODE

CATHODE—COLD

HEATER

GAS-FILLED

ENVELOPE

SPLIT ENVELOPE

MISCELLANEOUS

HORN

IGNITER CONTACT PIN

MECHANICAL LINKAGE

SPARK PLUG

TEST POINT

TRANSISTORS

JUNCTION (PNP-TYPE)

JUNCTION (NPN-TYPE)

POINT CONTACT (N-TYPE)

POINT CONTACT (P-TYPE)

NOTE The build-up examples found in this manual are typical combinations of basic symbols. No attempt is made to list all possible build-up examples on this chart.

GEN-21C

ELECTRICAL SYMBOLS
Figure 1-3 (Sheet 3 of 3)

© COPYRIGHT, 1981 BY ROCKWELL INTERNATIONAL

ITEMS-OF-EQUIPMENT-WITHOUT-TERMINAL-IDENTIFICATION INDEX

1 On items having one terminal, the terminal is always designated as "A."

2 On items having two terminals, when polarity is not a factor, the arbitrary input terminal is designated as "A" and the arbitrary output terminal is designated as "B"; similarly, when polarity is a factor, the input terminal is designated as "A" and the output terminal is designated as "B."

CAPACITOR
CP54B4EG104V (2X.1 MFD) 3
GENERAL ELECTRIC

CIRCUIT BREAKERS
7274-2-( ) 3
MS25244-( ) 3

CONTROL WHEEL 17

DIODE
INTERNATIONAL RECTIFIER
265-540300 & -11 NR (SEE RECTIFIER) 6

DOME LIGHT
L-15977 4
LUMINATOR

ENGINE HARNESS
10-166435-5 15
BENDIX

40961 16
PRATT & WHITNEY

FILTER - RADIO NOISE
TF-57160 4
THOMPSON PROD

LIGHT ASSEMBLY
2182 4
READING LIGHT ASSEMBLY
WEMAC

1276-12 4
UNITED CONTROL CORP

PLUG
AN3116-2 6

RECEPTACLE
265-540332 6
EXTERNAL POWER RECEPTACLE
NR
107A 6
INDIRECT LIGHTED PANEL
COASTAL

RECTIFIER
10B4 (SEE DIODE) 6
INTERNATIONAL RECTIFIER

3ES1 6
INTERNATIONAL RECTIFIER

265-540300 & -11 (SEE DIODE) 6
NR

S370-2-54-32

ITEMS OF EQUIPMENT WITHOUT TERMINAL IDENTIFICATION
Figure 1-4 (Sheet 1 of 15)

© COPYRIGHT, 1981 BY ROCKWELL INTERNATIONAL

ITEMS-OF-EQUIPMENT-WITHOUT-TERMINAL-IDENTIFICATION

INDEX (CONTINUED)

RELAYS SHEET

3440-10004 OR 3440 32007 8
12 VOLT COIL, 4 PDT, 10 AMP
HURLETRON

9224-3823 7
NA5-7820-22 TYPE V
LEACH

400-40540 2 AMP DPDT 7
ELECTRO-TEC

MS24143-1 7
MS24143-1D 7

UN331457-005 7
NA5-7820-30 TYPE VI
UNION SWITCH & SIGNAL

BR12-675A8-S73 8
BR7X-300E8-26V 8
BR7X-300D8-26V 8
BABCOCK

2705Y5E60 8
2745K17D15
AGASTAT

RHEOSTATS

45809 TYPE I OHMITE 9
45810 TYPE II OHMITE 9
45811 TYPE III OHMITE 9
45812 TYPE IV OHMITE 9
45813 TYPE V OHMITE 9

RESISTOR

1-TA-51-F-S-( ) 6
ADJUSTABLE RESISTOR
OHMITE

SHUNT

8414-600 11
JANCO

SWITCHES

MS25068-( ) 10
MS25089-( ) 10
MS25128-( ) 11
MS35058-( ) 11
MS35059-( ) 11

H11-1091 13
CONTROLS COMPANY OF AMERICA

1900-5-B7 12
JANCO

8905K783 CUTLER HAMMER (SWITCH FLAP) 12

2PB11 13
MICROSWITCH (PUSH BUTTON)

THERMOSTAT

11041-49-1 9
11041-49-2
METALS AND CONTROLS

WINDOW HEAT ELEMENTS AND TEMP SENSOR 14
WINDSHIELD HEAT ELEMENT & TEMP SENSOR 14

S370-2-54-33A

ITEMS OF EQUIPMENT WITHOUT TERMINAL IDENTIFICATION
Figure 1-4 (Sheet 2 of 15)

© COPYRIGHT, 1981 BY ROCKWELL INTERNATIONAL

CAPACITOR

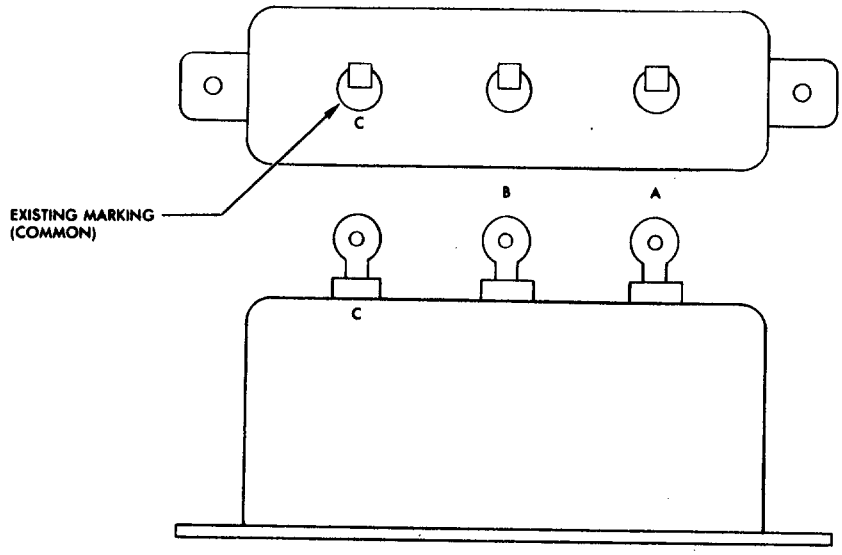

CP54B4EG104V (2X.1 MFD)
GENERAL ELECTRIC

CIRCUIT BREAKER

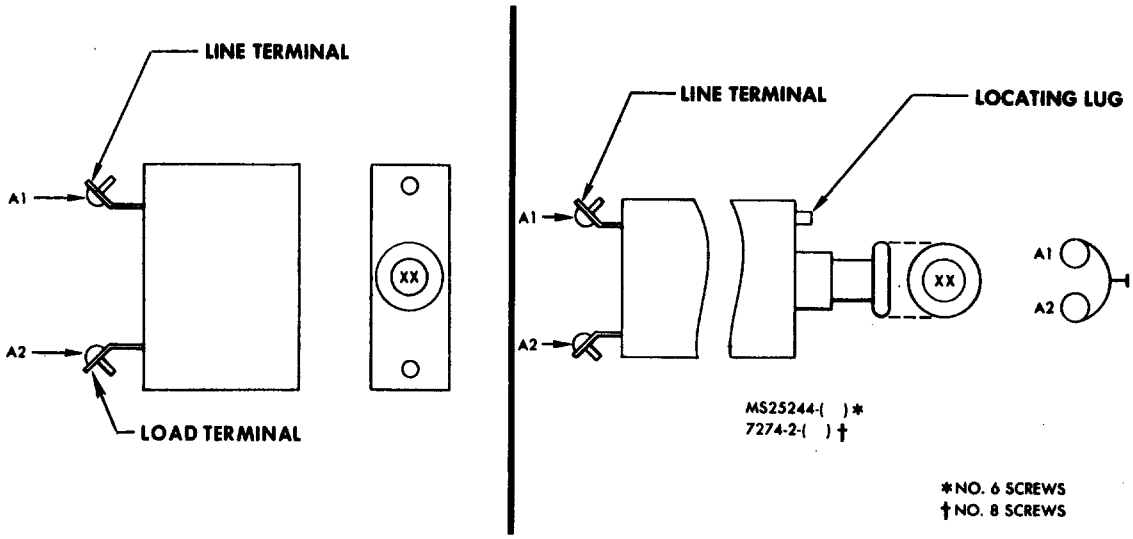

5370-2-54-34

ITEMS OF EQUIPMENT WITHOUT TERMINAL IDENTIFICATION
Figure 1- (Sheet 3 of 15)

© COPYRIGHT, 1981 BY ROCKWELL INTERNATIONAL

FILTER ASSEMBLY—RADIO NOISE

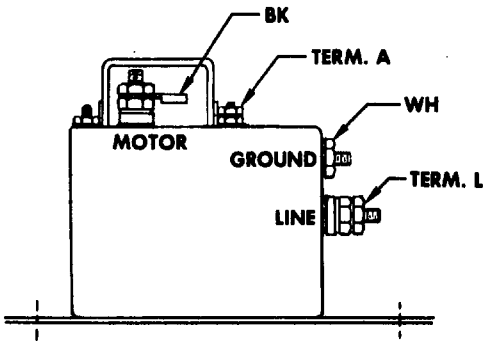

TF-57160
THOMPSON PRODUCTS, INC

DOME LIGHT

NO. 6 SCREWS

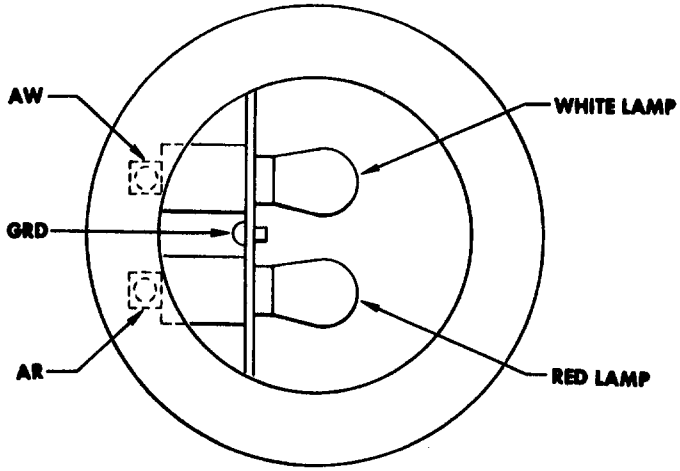

VIEWED FROM LENS SIDE
WITH LENS REMOVED

L-15977
LUMINATOR

GRD IS COMMON STRUCTURE GROUND
AR IS INPUT TERMINAL FOR RED LAMP
AW IS INPUT TERMINAL FOR WHITE LAMP

LIGHT ASSEMBLIES

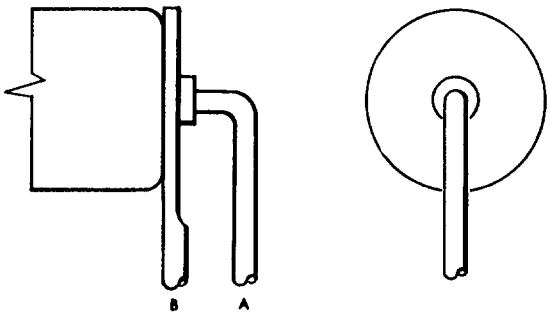

2182
READING LIGHT ASSEMBLY
WEMAC

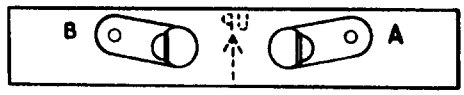

1276-1-12
UNITED CONTROL CORP

5370-2-54-35

ITEMS OF EQUIPMENT WITHOUT TERMINAL IDENTIFICATION
Figure 1-4 (Sheet 4 of 15)

© COPYRIGHT, 1981 BY ROCKWELL INTERNATIONAL

RECEPTACLES KPTM( )-22-55( )
(REAR VIEWS SHOWN)

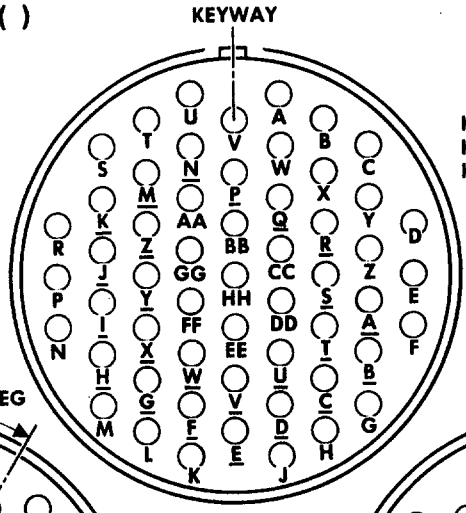

KPTM00E-22-55S
KPTM02E-22-55S
KPTM06E-22-55P (PLUG INSERT OPPOSITE)

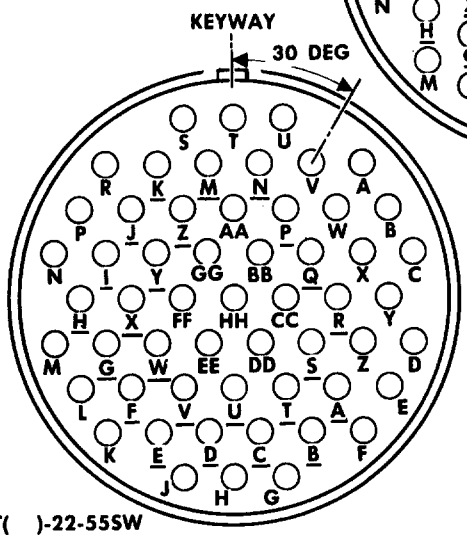

KPT( )-22-55SW
KPT( )-22-55PW (PLUG INSERT OPPOSITE)

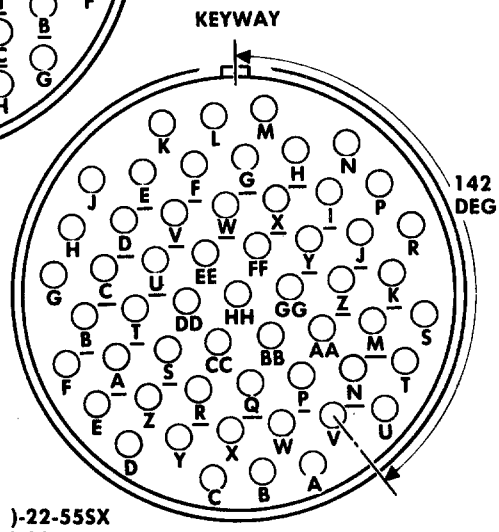

KPT( )-22-55SX
KPT( )-22-55PX (PLUG INSERT OPPOSITE)

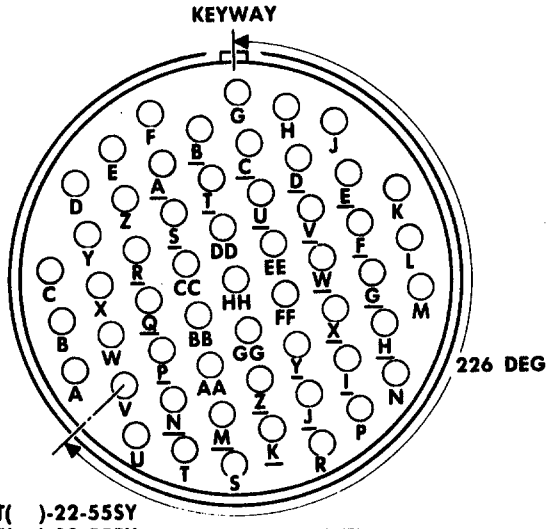

KPT( )-22-55SY
KPT( )-22-55PY (PLUG INSERT OPPOSITE)

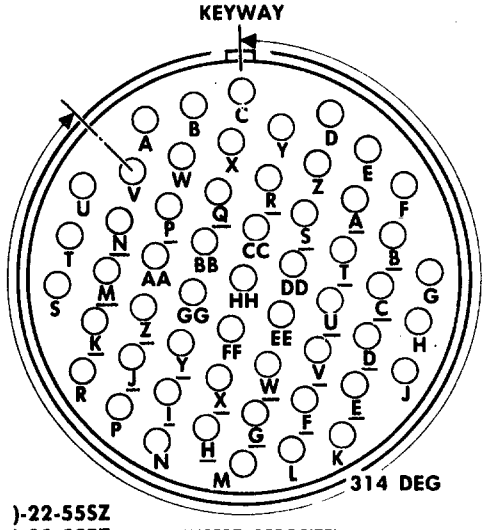

KPT( )-22-55SZ
KPT( )-22-55PZ (PLUG INSERT OPPOSITE)

Note

- The outer circles of contacts are identified on the connectors.
- When reading the contacts from the face of the connector, read counterclockwise for contact identification.

S370-2-54-36

ITEMS OF EQUIPMENT WITHOUT TERMINAL IDENTIFICATION
Figure 1-4 (Sheet 5 of 15)

© COPYRIGHT, 1981 BY ROCKWELL INTERNATIONAL

RECEPTACLES (CONTINUED)

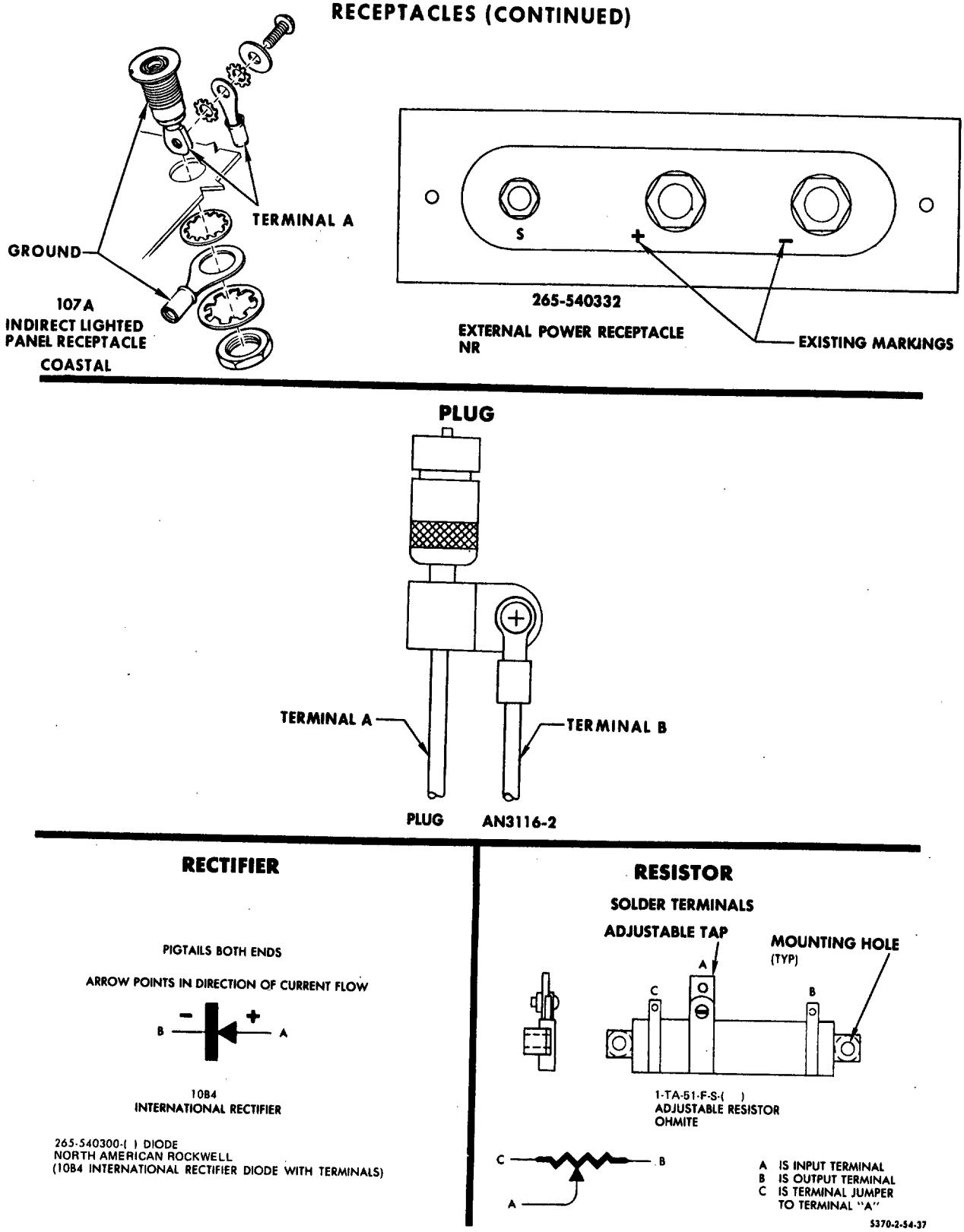

ITEMS OF EQUIPMENT WITHOUT TERMINAL IDENTIFICATION
Figure 1-4 (Sheet 6 of 15)

© COPYRIGHT, 1981 BY ROCKWELL INTERNATIONAL

RELAYS (CONTINUED)

SOLDER TERMINALS

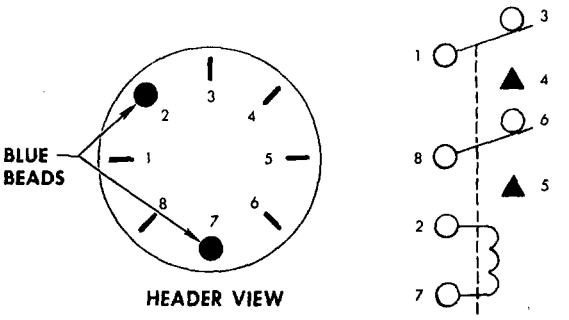

HEADER VIEW

2 AMP DPDT
400-40540
ELECTRO-TEC

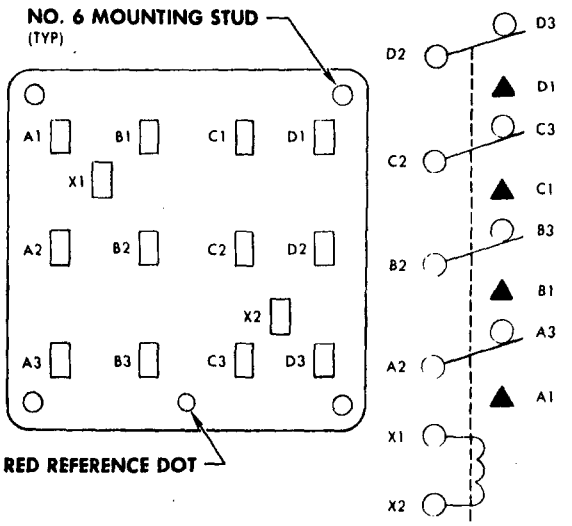

HEADER VIEW

NA5-7820-22 TYPE V
LEACH PART NO. 9224-3823

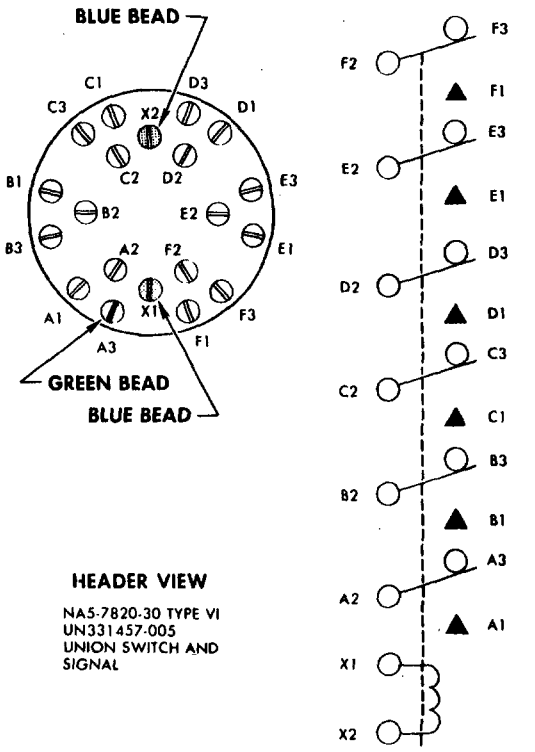

HEADER VIEW

NA5-7820-30 TYPE VI
UN331457-005
UNION SWITCH AND SIGNAL

S370-2-54-38

ITEMS OF EQUIPMENT WITHOUT TERMINAL IDENTIFICATION
Figure 1-4 (Sheet 7 of 15)

© COPYRIGHT, 1981 BY ROCKWELL INTERNATIONAL

RELAYS

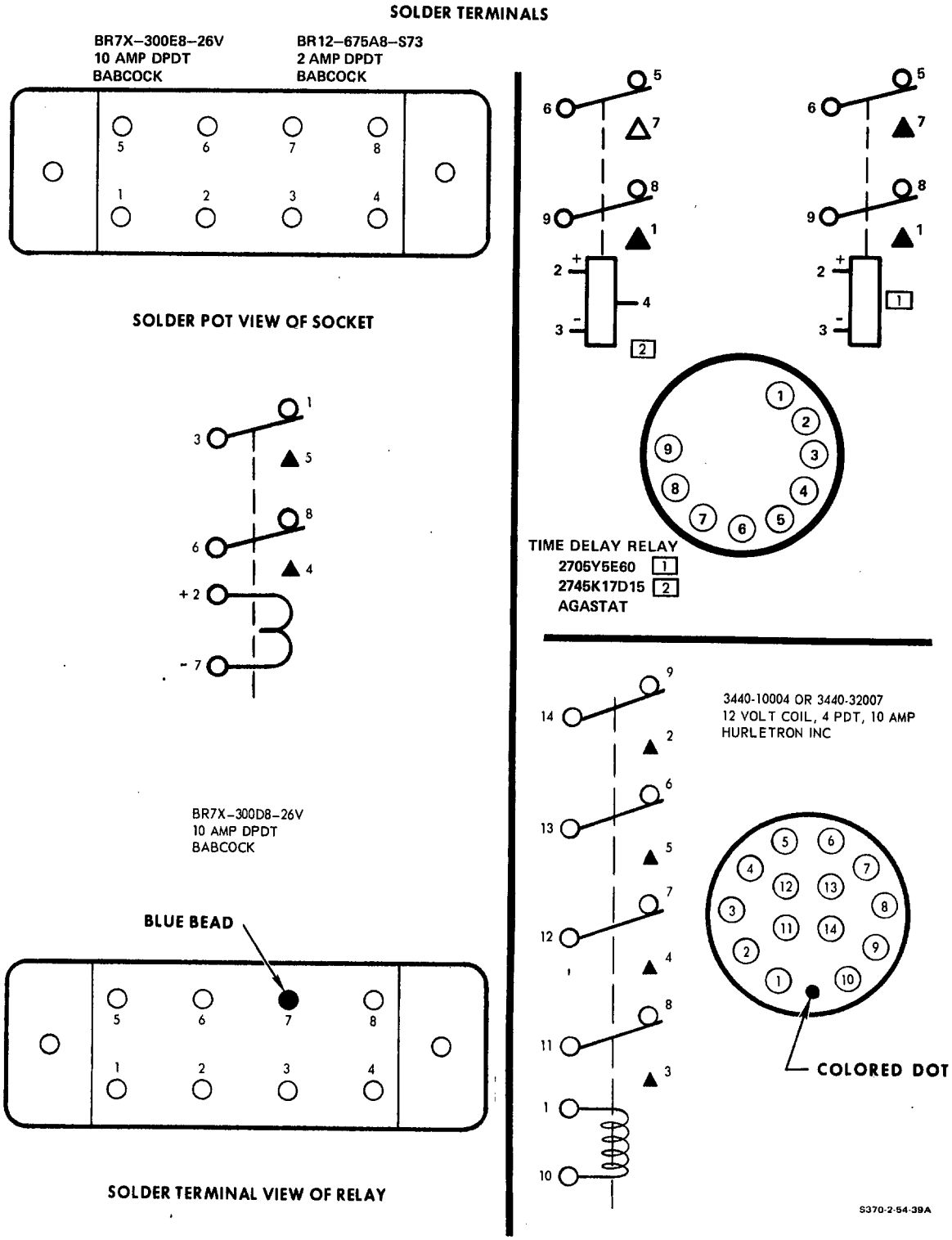

ITEMS OF EQUIPMENT WITHOUT TERMINAL IDENTIFICATION
Figure 1-4 (Sheet 8 of 15)

© COPYRIGHT, 1981 BY ROCKWELL INTERNATIONAL

RELAYS (CONTINUED)

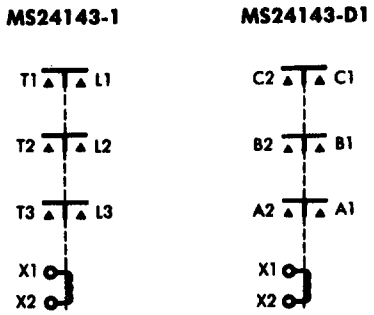

NOTE MS24143-1 and MS24143-D1 relays are interchangeable, provided the terminal designation relationship is observed as shown in the following instructions. When relay MS24143-1 replaces relay MS24143-D1 (or relay MS24143-D1 replaces relay MS24143-1), the wires connected to terminals T1 and L1 on relay MS24143-1 must be connected to terminals C2 and C1 on relay MS24143-D1, wires on terminals T2 and L2 must be connected to terminals B2 and B1, and wires on terminals T3 and L3 must be connected to terminals A2 and A1, respectively. Terminals X1 and X2 remain the same on each relay.

RHEOSTAT

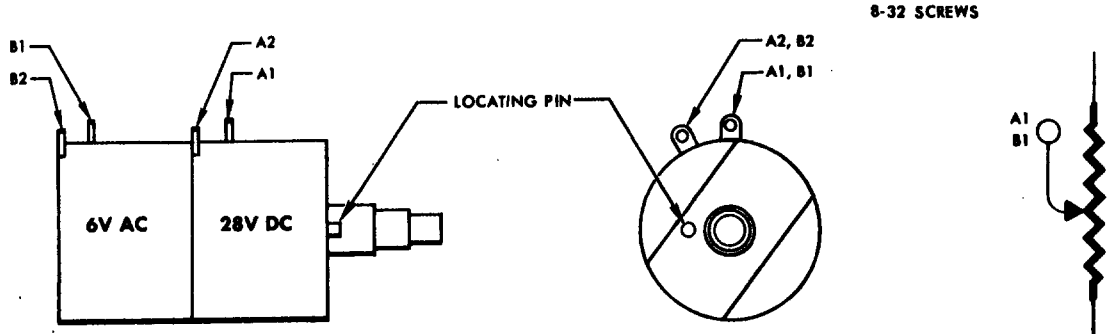

TYPE I OHMITE 45809
TYPE II OHMITE 45810
TYPE III OHMITE 45811
TYPE IV OHMITE 45812
TYPE V OHMITE 45813

A1 AND B1 ARE COMMON TERMINALS

THERMOSTAT

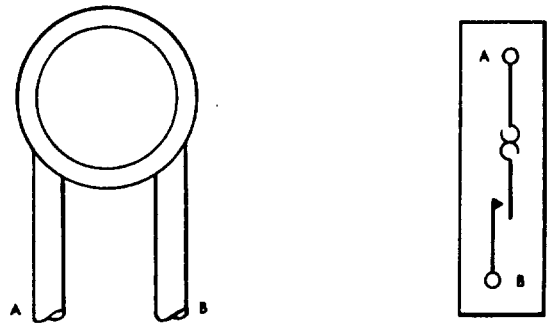

11041-49-1
11041-49-2
METALS AND CONTROLS

5370-2-54-40

ITEMS OF EQUIPMENT WITHOUT TERMINAL IDENTIFICATION
Figure 1-4 (Sheet 9 of 15)

© COPYRIGHT, 1981 BY ROCKWELL INTERNATIONAL

SWITCHES

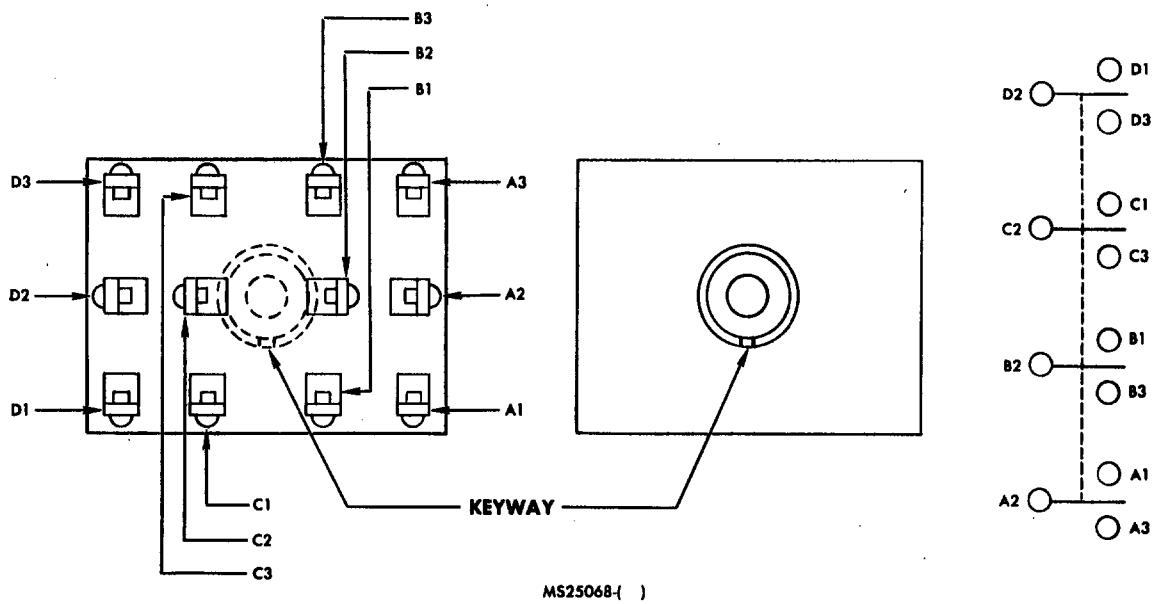

MS25068-( )

A2, B2, C2, and D2 are common terminals.

Depending on the dash number, terminals A1, B1, C1, and D1, or A3, B3, C3, and D3 may not be on some switches.

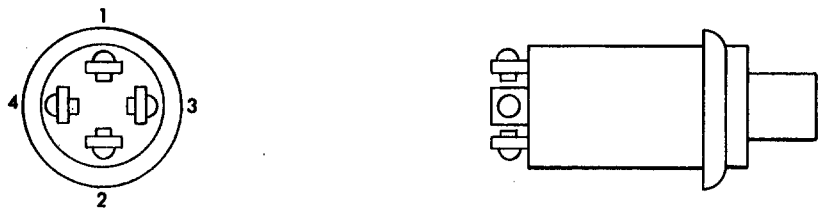

MS25089-( )

A continuity meter must be used to determine which terminals of the two-circuit switch are normally open and normally closed.

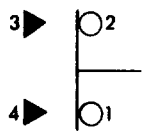

-3 SWITCH
2-CIRCUIT

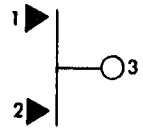

-4 SWITCH
NORMALLY OPEN

5370-2-54-41

ITEMS OF EQUIPMENT WITHOUT TERMINAL IDENTIFICATION
Figure 1-4 (Sheet 10 of 15)

© COPYRIGHT, 1981 BY ROCKWELL INTERNATIONAL

SWITCHES (CONTINUED)

NO. 8 SCREWS

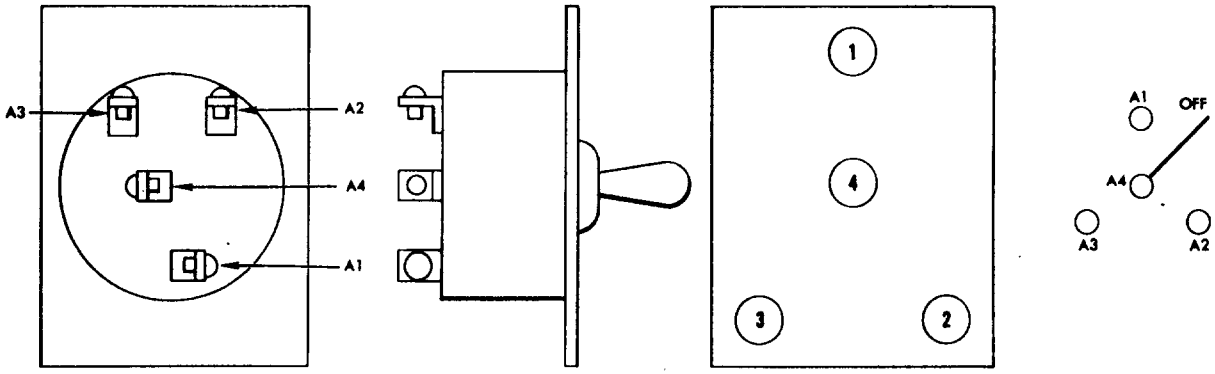

REAR VIEW | SIDE VIEW | FRONT VIEW
SWITCH POSITIONS

MS25128-( )

A4 IS COMMON TERMINAL

SHUNT

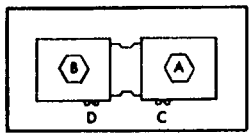

8414-600
JANCO

NO. 6 SCREWS

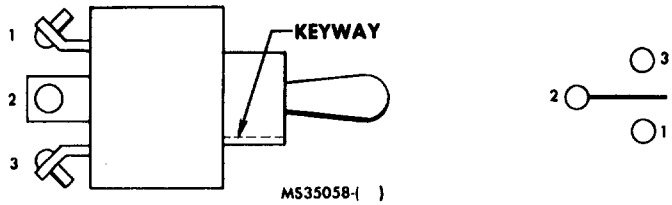

MS35058-( )

2 is common terminal.

Depending on the switch dash numbers, either terminal 1 or terminal 3 may not be on some switches.

NO. 6 SCREWS

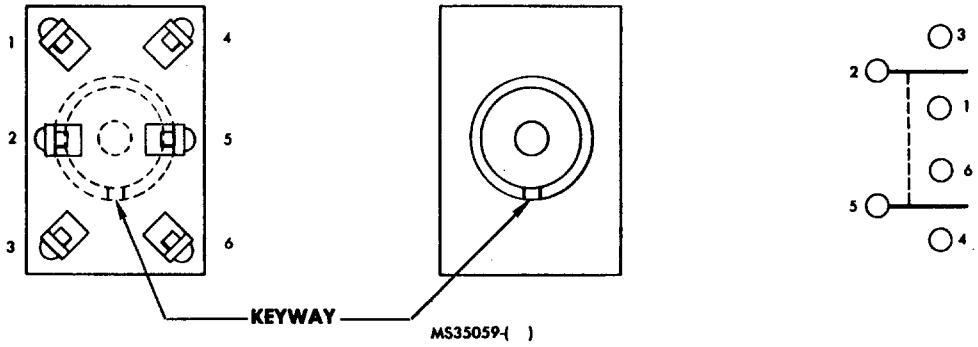

MS35059-( )

2 and 5 are common terminals.

Depending on the switch dash numbers, terminals 6 and 3, or 4 and 1 may not be on some switches.

S370-2-54-42

ITEMS OF EQUIPMENT WITHOUT TERMINAL IDENTIFICATION
Figure 1-4 (Sheet 11 of 15)

© COPYRIGHT, 1981 BY ROCKWELL INTERNATIONAL

SWITCHES (CONTINUED)

1900-5-B7 OR 8-1903-2 JANCO

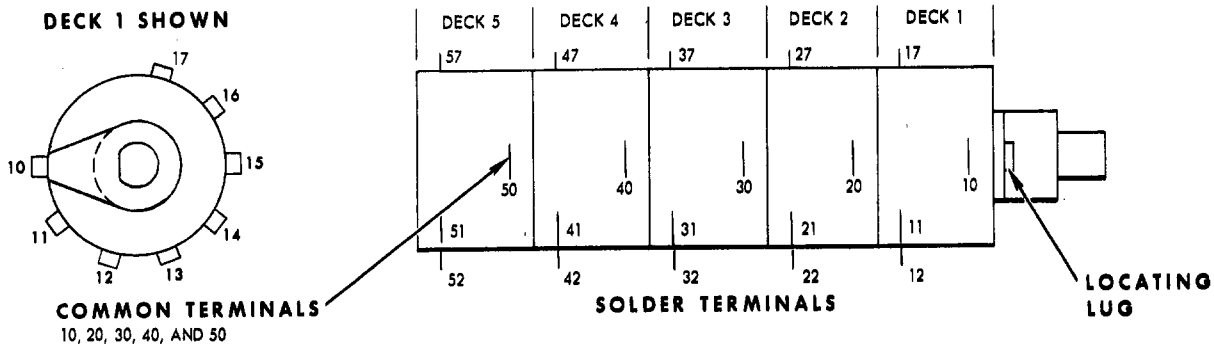

8-1903-1 JANCO

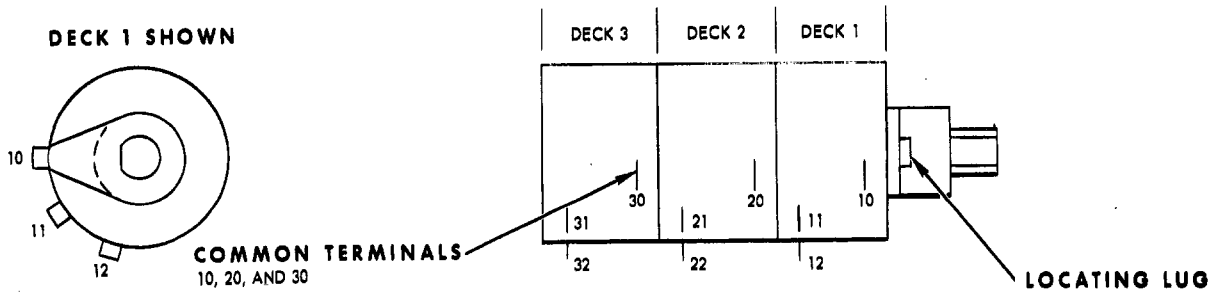

SWITCH FLAP
1/4 - 20 THREAD TERMINALS

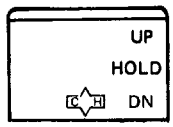

FRONT VIEW

(CUTLER-HAMMER 8905 K783)

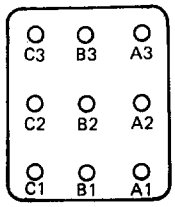

REAR VIEW

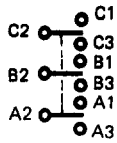

1. TERMINALS A2, B2 AND C2 ARE COMMON
2. TERMINALS A1, B1 AND C1 ARE ENGAGED WHEN SWITCH IS AT UP POSITION
3. TERMINALS A3, B3 AND C3 ARE ENGAGED WHEN SWITCH IS AT DN POSITION
4. TERMINALS A3, B1, C1 AND D3 ARE ENGAGED WHEN SWITCH IS AT APPR POSITION
5. UP, DN AND APPR POSITIONS REFER TO PANEL NOMENCLATURE
6. SWITCH IS TO BE INSTALLED SO THAT TRADE-MARK AND DN POSITION ON PANEL COINCIDE

S370-2-84-43A

ITEMS OF EQUIPMENT WITHOUT TERMINAL IDENTIFICATION
Figure 1-4 (Sheet 12 of 15)

© COPYRIGHT, 1981 BY ROCKWELL INTERNATIONAL

SWITCHES (CONTINUED)

SOLDER TERMINALS

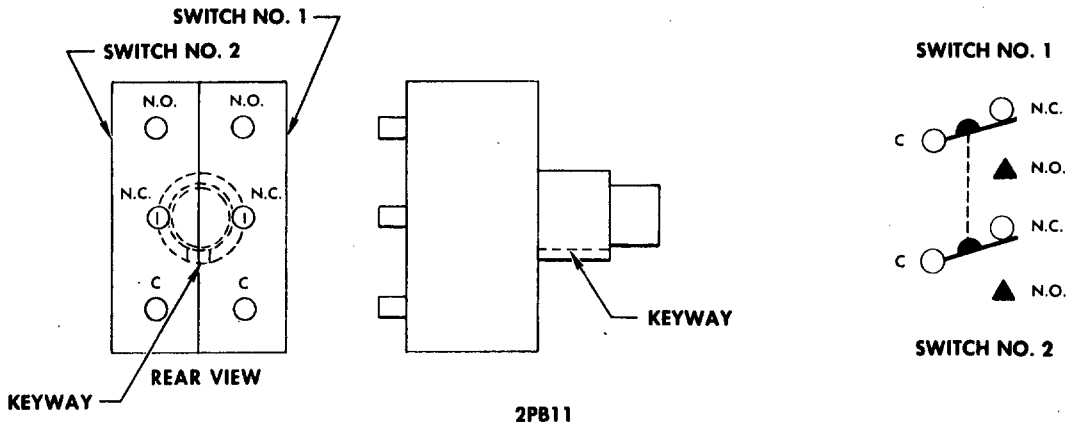

2PB11

MICROSWITCH (PUSH BUTTON)

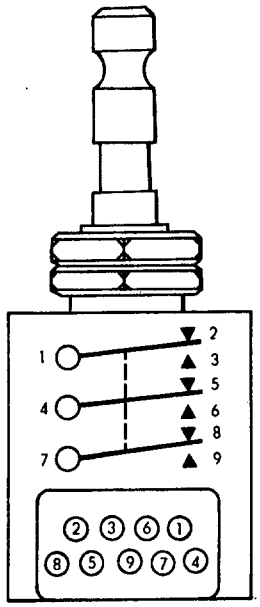

H11-1091

CONTROLS SWITCH DIVISION
CONTROLS COMPANY OF AMERICA
HERMETICALLY SEALED, ROTARY ACTUATED

S370-2-54-44

ITEMS OF EQUIPMENT WITHOUT TERMINAL IDENTIFICATION
Figure 1-4 (Sheet 13 of 15)

© COPYRIGHT, 1981 BY ROCKWELL INTERNATIONAL

SIDE WINDOWS HEAT ELEMENTS AND TEMP SENSORS

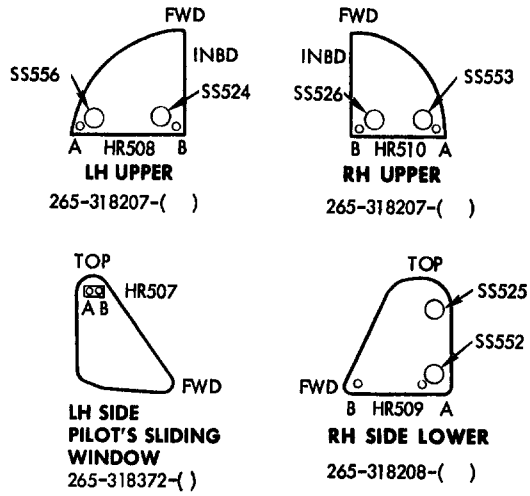

NOTE: A AND B ARE HEATER ELEMENT TERMINAL DESIGNATIONS

WINDSHIELD HEAT ELEMENT & TEMP CONTROL SENSOR

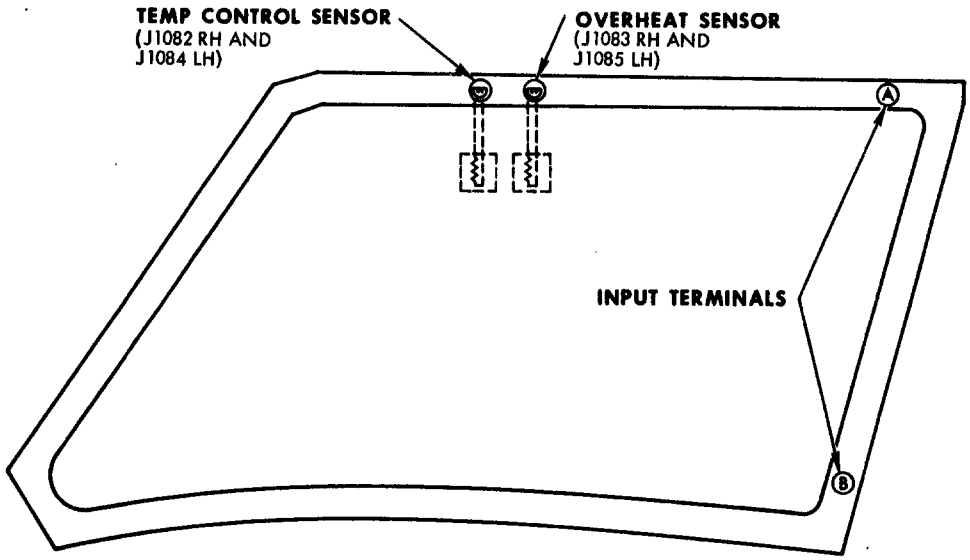

RIGHT HAND WINDSHIELD (HR1007) SHOWN

LEFT HAND WINDSHIELD (HR1008) TYPICAL

5370-2-84-45

ITEMS OF EQUIPMENT WITHOUT TERMINAL IDENTIFICATION
Figure 1-4 (Sheet 14 of 15)

© COPYRIGHT, 1981 BY ROCKWELL INTERNATIONAL

CONTROL WHEEL WIRING

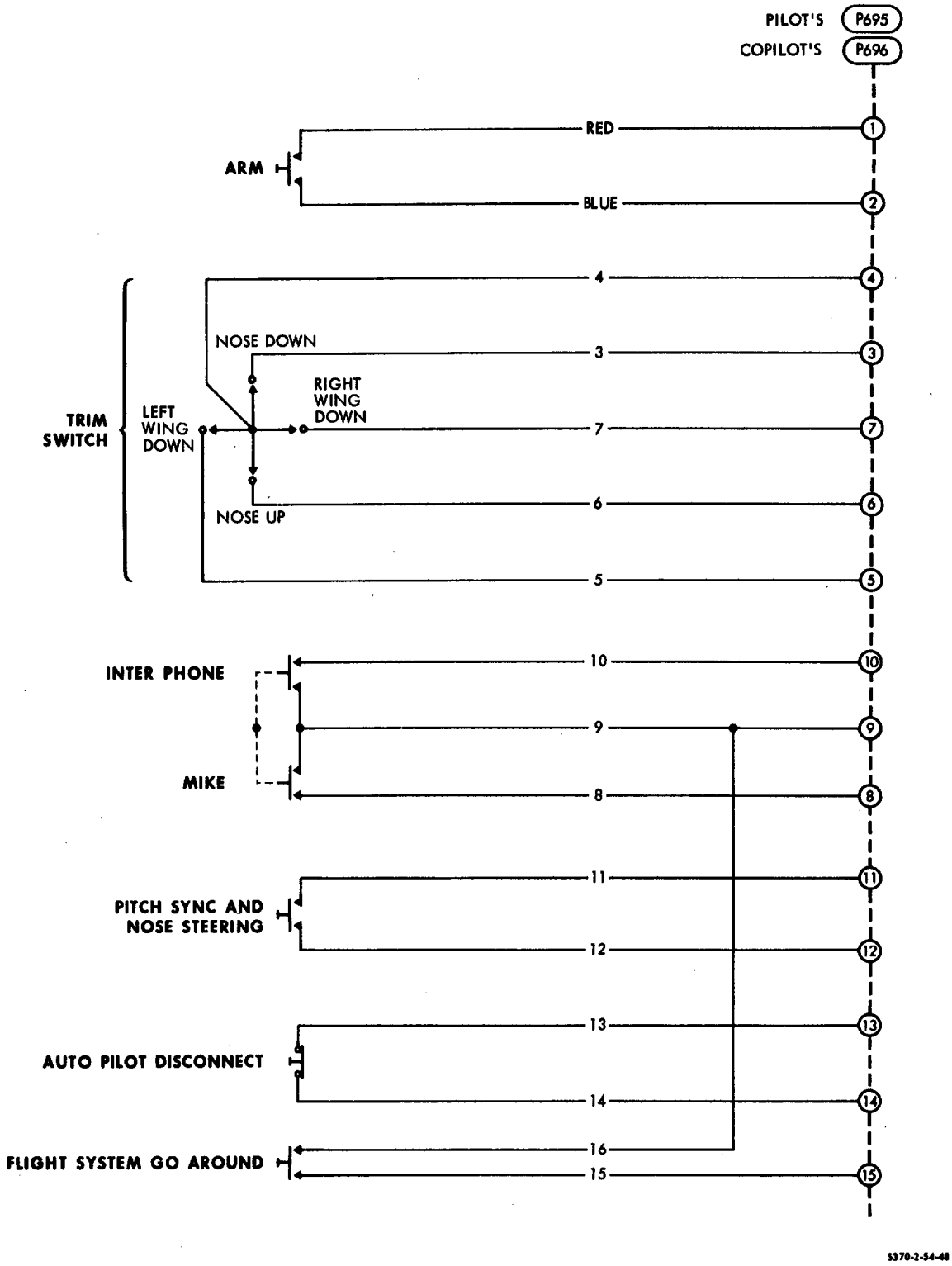

ITEMS OF EQUIPMENT WITHOUT TERMINAL IDENTIFICATION
Figure 1-4 (Sheet 15 of 15)

© COPYRIGHT, 1981 BY ROCKWELL INTERNATIONAL

RELAY TERMINAL IDENTIFICATION

The following is a listing of all relays and time delay relays shown on the wiring diagrams in this manual. Included in the listing are the Reference Designator Index number (RDI), the relay terminal number or letter, and the first part of the wire indentification code which contains the circuit function letter and a portion of the wire number. Refer to the Circuit Function Letter table in this section to determine the applicability of a circuit function letter to a particular system. Relay terminals that are shown without a wire identification code are unused terminals.

K500

1	
2	W3
3	1P224
4	P78
5	1P223
6	P80
7	
8	
9	H3
10	
11	H2
12	Q83
13	
14	Q89
15	W2
16	Q88

K501

1	
2	W5
3	2P224
4	P135
5	2P223
6	P137
7	
8	
9	H19
10	
11	H18
12	Q99
13	
14	Q106
15	W4
16	Q105

K502

A1	P26
A1	P26
A2	P33
A2	P33
X1	P237
X2	P232
11	
12	P236
13	P237
21	
22	
23	

K506

1	W10
1	W9
1	W9
2	W9
2	W9
3	W10
3	W9
3	W9
4	W15
5	W15
5	Q96
6	W12
7	W12
7	W14
8	W14

K507

1	
2	W7

K507

3	W24
4	
5	W26
6	
7	W106
8	

K508

SW	1P214
APP	1D167
BAT	BUS
BAT	BUS
GEN	BUS
GEN	1P208
GEN	1P208
NEG	P67
IND	1P71

K509

SW	2P214
APP	2D167
BAT	BUS
GEN	BUS
GEN	2P208
GEN	2P208
NEG	P67
IND	2P71

K510

A1	BUS

© COPYRIGHT, 1981 BY ROCKWELL INTERNATIONAL

K510

A1	P4
A2	P33
A2	P33
A2	P33
X1	P33
X2	P35

K511

C	
D	
G	P94
A1	P26
A1	P26
A1	P26
A1	P26
A1	P26
A1	P26
A1	BUS
A2	2P23
A3	BUS
B1	BUS
B1	1P17
B2	2P25
B3	2P24
Y1	P93
Y1	P236

K512

A1	P33
A1	BUS
A2	BUS
A2	1P17
X1	P20
X2	1P17

K514

SW	P39
BAT	P4
GEN	P34
IND	P29
APP	

K515

1	P93
2	P6
3	P206
4	P40
5	
6	P39
7	P7
8	

K516

1	P10
2	P10
3	P59
4	P2
4	P2
5	
6	P1
7	
8	
9	
10	
11	V26
11	V26
12	V46
12	V46
13	V64
13	V64
14	V45
14	V45
15	P29
16	

K521

1	
2	1P203
3	1P205
4	P77
5	P77
6	P78
7	
8	
9	
10	
11	1J1
12	
13	1J2

K521

14	P39
15	1P202
16	P41

K522

1	
2	2P203
3	2P205
4	P134
5	P134
6	P135
7	
8	
9	
10	
11	2J1
12	
13	2J2
14	P41
15	2P202
16	P40

K525

1	P54
2	P76
3	P55
4	P156
5	P10
6	P99
7	
8	1P98
9	P57
10	
11	P58
12	F409
13	
14	F403
14	F403
15	1P72
15	1P72
16	

© COPYRIGHT, 1981 BY ROCKWELL INTERNATIONAL

K526

1	P55
2	P76
3	P56
4	
5	P10
6	2P98
7	
8	P156
9	P58
10	
11	P59
12	F409
12	F409
13	
14	F403
15	2P72
15	2P72
16	

K531

A1	C36
A1	C36
A1	C36
A2	C33
A2	C33
X1	C32
X1	C32
X1	C32
X2	C33
X2	C33

K532

A1	C36
A1	C36
A1	C36
A2	C29
A2	C29
X1	C28
X1	C28
X1	C28
X2	C29
X2	C29

K534

1	
2	C56
3	C56
4	
5	C54
6	
7	
8	
9	
10	
11	C7
11	C6
12	C28
13	C32
14	C7
14	C6
15	C7
16	

K535

1	C10
2	C18
3	C50
4	C39
5	C51
6	C38
7	C23
7	C23
8	C11
9	C25
10	
11	C54
12	
13	C23
14	
15	C18
16	

K536

1	C16
2	C18
2	C20

K536

3	C17
3	C207
4	C21
5	C22
5	C54
6	C15
7	C20
8	C14
9	C16
10	
11	C17
12	C21
13	C22
14	C15
15	C18
16	C14

K538

L1	C58
L2	
L3	C67
T1	C26
T1	C57
T2	
T3	C27
T3	C66
X1	C12
X1	C12
X1	C12
X2	C126
X2	C126

K540

L1	C59
L2	
L3	C68
T1	C26
T1	C57
T1	C26
T1	C57
T2	
T3	C27

© COPYRIGHT, 1981 BY ROCKWELL INTERNATIONAL

K540

T3	C66
T3	C27
T3	C66
X1	C13
X1	C13
X1	C13
X2	C49
X2	C49

K544

A3	C66
A4	C27
X1	C18
X1	C18
X1	C18
X2	C4
X2	C4
X2	C4

K545

A1	
A2	
A3	C57
A4	C26
X1	C18
X1	C18
X2	C4
X2	C4

K551

1	1W171
2	W88
3	1W168
4	W71
4	W71
5	W71
6	2W168
7	W87
8	2W171

K552

1	1P215
2	P78
3	1P214
4	
5	
6	1P224
6	1P224
7	P79
8	1P221

K553

1	2P215
2	P135
3	2P214
4	
5	
6	2P224
6	2P224
7	P136
8	2P221

K560

1	Q33
1	Q33
2	Q56
2	Q56
3	Q70
3	Q162
4	
5	Q161
5	Q161
5	Q161
6	Q70
7	Q57
7	Q59
7	Q57
7	Q57
8	Q33
8	Q33
8	Q162

K561

1	Q33
2	Q58
2	Q58
3	Q71
3	Q164
4	
5	Q161
5	Q161
6	Q71
7	Q59
7	Q57
7	Q64
7	Q57
8	Q33
8	Q164

K562

1	
2	Q62
2	Q62
3	Q161
4	Q18
5	Q20
6	Q16
8	Q14
9	Q11
10	
A1	
A2	Q27
A3	Q26
B1	Q18
B2	Q16
B3	Q14
C1	Q7
C2	Q8
C3	Q11
D1	Q20
D2	Q161
D2	Q161
D3	
X1	Q61
X2	W109
X2	Q62
11	Q8

© COPYRIGHT, 1981 BY ROCKWELL INTERNATIONAL

K562

13	Q7
14	Q27
15	Q61
16	Q26

K563

1	Q26
1	Q26
1	Q69
2	Q63
2	Q63
3	Q69
3	Q26
4	
5	
6	
7	Q64
7	Q64
7	Q75
8	

K564

A1	Q3
A1	Q3
A2	Q171
A2	Q171
A3	Q3
A3	Q3
A3	Q3
A3	Q3
A4	Q4
A4	Q4
X1	Q16
X1	Q16
X2	Q17
X2	Q17

K565

1	Q18

K565

2	Q14
2	Q14
3	Q18
4	Q19
4	Q6
5	Q6
5	Q19
6	Q7
7	Q96
7	Q62
7	Q97
8	Q7

K566

A1	Q1
A1	Q1
A2	Q169
A2	Q169
A3	Q1
A3	Q1
A3	Q1
A3	Q112
A4	Q2
A4	Q2
X1	Q8
X1	Q8
X2	Q17
X2	Q17
X2	Q9
X2	Q9

K567

1	Q5
2	Q11
2	Q11
3	Q5
4	Q6
4	Q19
5	Q19
5	Q6
6	Q13

K567

7	Q62
7	Q97
7	Q62
7	D80
8	Q13

K568

A1	P31
A1	P31
A2	P150
A2	P150
X1	P2
X2	P11

K569

1	Q77
1	Q71
1	Q77
2	Q34
2	Q34
3	Q77
3	Q71
3	Q77
4	Q70
5	Q70
6	
7	Q57
7	Q75
7	Q68
7	Q57
8	

K570

1	Q69
1	Q77
2	Q25
2	Q25
3	Q69

© COPYRIGHT, 1981 BY ROCKWELL INTERNATIONAL

K570

3	Q77
4	Q27
5	Q27
6	
7	Q68
7	Q57
7	Q57
7	W102
8	

K578

1	D71
1	D71
2	D116
2	D116
3	D71
3	D71
4	D73
5	D73
5	D76
6	D80
7	D76
7	D76
7	D76
8	D80
8	W94

K579

1	D47
2	D49
2	D49
2	D49
2	D49
3	D47
4	D70
4	D70
5	D70
5	D70
6	
7	D71
7	D71
8	

K580

1	D72
2	D81
3	D70
4	
5	
6	RZ33
7	
8	D68
A1	
A2	D70
A3	D72
B1	
B2	RZ33
B3	D68
C1	
C3	D67
D1	
D2	
D3	D66
E1	D65
E2	D49
E3	
F1	
F2	
F3	
X1	D65
X1	D65
X2	D81
9	
10	
11	D49
12	
13	D65
13	D65
14	
15	D65
16	

K581

A1	W55
A1	W55
A2	D85
A3	D59
B1	W55
B1	W55

K581

B2	W103
B3	W97
C1	W55
C1	W55
C2	W104
C3	W98
D1	W55
D1	W55
D2	G126
D3	G122
D3	G122
E1	W55
E1	W55
E2	W82
E3	W81
F1	W196
F1	W196
F2	G123
F3	G122
X1	W93
X1	W93
X2	W94
X2	W94

K582

A1	
A2	D85
A2	D85
A3	D60
B1	
B2	W103
B2	W103
B3	W100
B3	W100
C1	
C2	W104
C2	W104
C3	W101
C3	W101
D1	
D2	G126
D2	G126
D3	G127
D3	G127
E1	

© COPYRIGHT, 1981 BY ROCKWELL INTERNATIONAL

K582

E2	W82
E2	W82
E3	W83
E3	W83
F1	
F2	G123
F2	G123
F3	G124
F3	G124
X1	W56
X1	W56
X2	W94
X2	W94

K584

1	Q92
1	Q92
1	Q93
2	Q83
2	Q83
3	Q92
3	Q93
4	Q95
5	Q95
6	
7	Q84
7	Q100
7	Q68
8	

K585

1	Q92
1	Q110
2	Q99
2	Q99
3	Q92
3	Q110
4	Q109
5	Q109
6	
7	Q100

K585

7	Q68
7	Q68
7	Q86
8	

K586

1	Q94
1	Q95
2	Q85
2	Q85
3	Q95
3	Q94
4	
5	
6	
7	Q86
7	Q102
7	Q102
8	

K587

1	Q94
1	Q109
2	Q103
2	Q103
3	Q109
3	Q94
3	Q94
4	
5	
6	
7	Q102
7	Q102
7	Q102
7	Q91
8	

K588

1	Q93

K588

1	Q94
2	Q90
2	Q90
3	Q93
3	Q94
3	Q94
4	W132
4	W131
5	W131
5	W132
6	W130
7	W91
7	Q108
7	Q86
8	W130

K589

1	Q110
1	Q94
2	Q107
2	Q107
3	Q94
3	Q110
3	Q94
4	W132
4	W131
4	W132
4	W131
5	W131
5	W132
5	W131
5	W132
6	W130
6	W130
7	Q108
7	W86
7	W86
7	W94
7	W94
8	W130
8	W130

© COPYRIGHT, 1981 BY ROCKWELL INTERNATIONAL

K596

A1	H120
A1	H120
A2	H121
A3	
A4	
X1	H124
X2	H177

K597

A1	H120
A2	H122
A3	H177
A4	H122
A4	H122
X1	H118
X2	H177

K600

A1	X18
A2	X33
A3	X2
B1	X19
B2	X33
B3	X1
C1	X26
C2	X31
C3	X3
D1	
D2	V20
D3	V5
X1	V18
X2	V31

K602

A	X61
B	W66
+	V32
-	V33

K603

1	
2	H161
3	H31
4	
5	H5
5	H5
6	
7	
8	
9	
10	
11	H257
12	G3
13	H42
14	G2
15	H80
16	G40

K607

A1	G7
A1	G7
A2	G31
A2	G31
A3	
B1	
B2	G4
B3	G5
X1	G3
X2	G6

K609

A1	W55
A1	W55
A2	D86
A3	D56
B1	W55
B1	W55
B2	D87
B3	D53
C1	W55
C1	W55
C2	W84

K609

C3	W125
D1	W55
D1	W196
D2	1D122
D3	1D121
E1	W55
E2	1D131
E3	1D130
F1	W55
F1	W55
F2	D88
F3	D50
X1	W93
X1	W93
X2	W94
X2	W94

K610

A1	
A2	D86
A2	D86
A3	D57
B1	
B2	D87
B2	D87
B3	D54
C1	
C2	W84
C2	W84
C3	W57
D1	
D2	
D3	
F1	
F2	D88
F2	D88
F3	D51
X1	W56
X1	W56
X2	W94

K618

1	H118

© COPYRIGHT, 1981 BY ROCKWELL INTERNATIONAL

	K618
2	D89
3	H123
4	H199
5	H124
6	H198
7	
8	
9	G80
10	
11	G118
12	W262
13	
14	P10
15	D116
16	

	K622
A1	W55
A1	W55
A2	2D122
A3	2D121
B1	W55
B1	W55
B2	2D131
B3	2D130
C1	W196
C2	1D140
C3	1D139
D1	W55
D1	W55
D2	1G142
D3	G135
E1	W55
E1	W55
E2	2G142
E3	G135
E3	G135
F1	W55
F1	W55
F2	2D140
F3	2D139
X1	W93
X1	W93
X2	W94
X2	W22

K623	K623
A1	
A2	
A3	
B1	
B2	
B3	
C1	
C2	W91
C3	W102
C3	W94
D1	
D2	
D3	
E1	
E2	
E3	
F1	
F2	
F3	
X1	W56
X1	W56
X2	W94
X2	W94

	K624
1	
2	D115
2	D115
3	D63
4	H254
5	D116
5	D116
6	H10
7	D117
8	

	K626
1	
2	G29
3	G7
4	
5	G31

	K626
6	
7	G5
7	G5
8	

	K630
1	
2	1P98
2	1P98
3	
4	1P158
5	
6	1P98
6	1P98
7	1P100
8	

	K631
1	
2	2P98
2	2P98
3	
4	2P158
5	
6	2P98
6	2P98
7	2P100
8	

	K632
1	
2	W109
3	W8
4	W19
5	W19
5	W19
6	W9
7	
8	

© COPYRIGHT, 1981 BY ROCKWELL INTERNATIONAL

	K632
9	
10	
A1	W19
A1	W19
A2	W8
A3	
B1	W19
B2	W9
B3	
C1	L41
C1	L41
C2	L42
C3	
D1	W24
D2	W25
D3	
X1	W20
X2	W109
11	L42
12	W24
13	L41
13	L41
14	W25
15	W20
16	

	K640
1	H254
2	H17
3	H33
4	H104
4	H104
5	H102
5	H102
6	H28
7	
8	H17
9	H102
10	
11	H33
12	H8
12	H8
13	H17
14	H28
15	H8

	K640
15	H8
16	H104

	K645
A1	BUS
A2	M13
A2	M13
X1	M16
X1	M16
X1	POT
X2	M17
X2	POT

	K646
A	X1
B	X4
+	V1
-	V50

	K647
1	
2	P76
3	V45
3	V45
4	V64
4	V64
5	V46
5	V46
6	V26
6	V26
7	
8	
9	
10	
11	P5
11	P5

	K647
12	P13
13	P3
14	P5
14	P5
15	1P72
15	1P72
16	

	K648
1	
2	P76
3	V45
4	V64
5	V46
6	V26
7	
8	
9	
10	
11	P3
12	P13
12	P13
13	P2
14	P5
15	2P72
15	2P72
16	

	K649
1	H155
2	H195
3	H156
4	
5	
6	H158
7	H188
8	H157

	K650
1	

© COPYRIGHT, 1981 BY ROCKWELL INTERNATIONAL

K650

2	H80
3	H11
4	H40
5	H8
6	H36
7	H189
8	H37

K657

1	
2	C136
3	
4	C34
5	
6	C32
7	C146
8	

K658

1	
2	C136
3	
4	C27
5	
6	C28
7	C147
8	

K660

1	
2	M24
2	M24
3	M15
4	M24
5	M22
5	M22
6	M21
6	M21
7	M23
8	M26

K661

1	
2	M25
3	M21
4	M25
4	M25
5	M24
6	M21
6	M21
7	M23
8	

K662

C1	M29
C1	M29
C2	M28
C3	M25
C3	M25
L1	BUS
I1	BUS
COM	M27

K665

1	M22
2	M45
3	M15
3	M15
4	
5	M27
5	M27
6	
7	M46
8	

K668

1	Q143
2	Q135
3	Q23
4	Q13
5	Q25

K668

6	Q18
7	
8	
9	
10	
11	Q21
12	
13	Q166
14	
15	Q130
16	

K669

1	Q142
2	Q135
3	Q143
4	Q7
5	Q25
5	Q25
6	Q5
7	
8	
9	
10	
11	Q21
11	Q21
12	
13	Q168
14	
15	Q132
16	

K670

1	Q28
2	Q134
3	Q142
4	Q34
5	Q25
5	Q25
6	Q31
7	Q135
8	Q32

© COPYRIGHT, 1981 BY ROCKWELL INTERNATIONAL

K678

1	
2	D116
2	D116
3	D64
4	
5	
6	G136
6	G136
7	D64
7	D64
7	G137
7	W94
8	G136
8	G137

K679

1	
2	W4
2	W4
3	
4	
5	
6	H197
6	H196
7	W22
7	W22
8	H196
8	H197

K680

1	
2	Q150
3	3K407
4	1Q102
5	3K408
6	1Q101
7	
8	
9	
10	
11	2Q101
12	W134

K680

13	2Q102
14	W133
15	H80
16	

K690

1	
2	W88
2	W88
3	
4	W38
5	
6	W39
7	W40
8	

K706

1	
2	F404
3	W240
4	W201
5	W254
6	W241
7	W207
8	

K707

1	
2	G91
3	G91
4	G90
5	G88
6	G88
7	G93
8	

K708

1	
2	G100
3	
4	G92
5	
6	G91
7	G102
8	

K709

1	
2	G83
3	G88
4	G83
5	G80
6	G119
7	G93
8	

K710

1	
2	G104
3	
4	G88E
5	
6	G92
7	G102
8	

K711

1	
2	G96
3	G86
4	G94
5	G83
6	G119
7	G97
8	

© COPYRIGHT, 1981 BY ROCKWELL INTERNATIONAL

K712

1	
2	G98
3	G84
4	G83
5	G83
6	G94
7	G97
8	

K713

A1	G99
A2	G12
A3	G98
B1	G101
B2	G10
B3	G97
C1	G103
C2	G11
C3	G96
D1	G160
D2	G120
D3	G106
X1	G88
X2	G89
X2	G89

K714

A1	
A2	G99
A3	G100
B1	
B2	G101
B3	G102
C1	
C2	G103
C3	G104
D1	
D2	G160
D3	G117
X1	G90
X2	G89

K717

L1	C205
L2	C204
L2	C204
L3	C203
L3	C203
T1	C36
T1	C36
T2	C59
T2	C59
T3	C68
T3	C68
X1	C52
X1	C52
X1	C52
X2	C4
X2	C4
X2	C4
X2	C4

K718

L1	C202
L2	C58
L2	C58
L3	C67
L3	C67
T1	C36
T1	C36
T2	C204
T3	C203
X1	C40
X1	C40
X1	C40
X2	C4
X2	C4
X2	C4
X2	C4

K719

1	
2	E70
3	E66
4	E69

K719

5	E68
6	E67
7	
8	
9	
10	
11	
12	
13	
14	
15	F404
16	

K725

1	M36
2	C121
3	M70
4	
5	
6	
7	C220
8	

K726

1	M70
2	C123
3	M71
4	
5	
6	
7	C220
8	

K728

1	W201
2	W205
3	W200
4	W204
5	W206

© COPYRIGHT, 1981 BY ROCKWELL INTERNATIONAL

K728

6	W260
7	
8	W254
9	P2
9	P2
10	
11	P13
11	P13
12	
13	
14	F409
15	H80
15	H80
16	F423

K729

1	M48
2	M30
3	M38
4	W131
5	M30
6	W133
7	M50
8	W132

K731

1	
2	1W233
3	1W254
4	1W241
5	1W240
6	1W201
7	
8	
9	
10	
11	
12	
13	
14	
15	F404
16	

K732

1	1W254
2	1W233
3	1W260
4	1W206
5	1W204
6	1W200
7	
8	1W201
9	1W231
10	
11	1W244
12	
13	
14	
15	H80FE20
16	

K733

1	1W231
2	1W202
3	1W255
4	
5	
6	
7	W255
8	

K734

1	
2	2W236
2	2W236
3	1W209
3	1W209
4	2W202
4	2W202
4	2W202
5	1W202
5	1W202
6	2W209
6	2W236
7	2W231
8	

K735

1	
2	1W236
2	1W236
3	1W209
3	1W236
4	2W202
4	2W202
5	1W202
5	1W202
6	2W209
6	2W209
7	1W231
8	

K737

1	1W237
2	JPR
3	1W229
4	JPR
4	JPR
5	W239
5	JPR
6	2W229
7	W242
8	2W237

K780

1	
2	M49
3	
4	G43
5	
6	G25
7	M42
8	

K781

1	
2	G43

© COPYRIGHT, 1981 BY ROCKWELL INTERNATIONAL

K781

3	
4	
5	
6	M38
7	G44
8	M41

K785

1	1G152
2	1G155
2	1G155
3	1G141
4	
5	
6	
7	1G153
7	1G153
8	

K786

1	2G152
2	2G155
2	2G155
3	2G141
4	
5	
6	
7	2G153
7	2G153
8	

K787

1	1G153
1	1G153
2	D160
2	D160
3	1G141
3	1G141
4	G135

K787

4	G135
5	
6	1G155
7	
8	
9	2G153
9	2G153
10	
11	2G141
11	2G141
12	G135
13	
14	2G155
15	D115
15	D115
16	

K789

1	
2	1Q119
3	
4	1Q117
5	
6	1Q116
6	1Q116
7	1K50
7	2K50
7	1K50
8	

K790

1	
2	2Q119
3	
4	2Q117
5	
6	2Q116
6	2Q116.
7	2K50
8	

K791

1	
2	C117
2	C117
3	
4	C118
5	
6	C117
7	C119
8	

K792

1	2Q116
1	2Q116
2	H82B
3	2Q121
4	
5	
6	1Q121
7	M89
8	1Q116
8	1Q116

K805

1	
2	P229
3	P230
4	
5	P231
6	
7	P234
8	

K806

1	
2	P229
2	P229
3	P229
3	P229
4	

© COPYRIGHT, 1981 BY ROCKWELL INTERNATIONAL

K806

5	P230
6	
7	P235
8	

K811

1	D60
1	D60
2	W94
2	W94
3	D85
4	
5	
6	W103
7	
8	W100
8	W100
9	1D123
9	1D123
10	1D123
11	1D122
12	
13	
14	2D122
15	W56
15	W56
16	2D123
16	2D123

K812

1	D59
2	W94
2	W94
3	D85
3	D85
4	
4	
5	W55
5	
6	W103
6	W103

K812

7	
8	W97
9	1D121
10	
11	1D122
11	1D122
12	
12	W55
13	
12	
14	2D122
14	2D122
15	W93
15	W93
16	2D121

K813

1	W91
2	W94
2	W94
3	W102
4	
5	
6	W104
7	
8	W101
8	W101
9	G124
9	G124
10	
11	G123
12	
13	
14	G126
15	W56
15	W56
16	G127
16	G127

K814

1	
2	W94

K814

2	W94
3	
4	
4	
5	W55
5	
6	W104
6	W104
7	
8	W98
9	G122
10	
11	G123
11	G123
12	
12	W55
13	
13	
14	G126
14	G126
15	W93
15	W93
16	G122
16	G122

K815

1	D51
1	D51
2	W94
3	D88
4	
5	
6	D86
7	
8	D57
8	D57
9	W83
9	W83
10	
11	W82
12	
13	
14	D87
15	W56
16	D54
16	D54

© COPYRIGHT, 1981 BY ROCKWELL INTERNATIONAL

	K816
1	D50
2	W94
3	D88
3	D88
4	
4	
5	W55L20
5	
6	D86
6	D86
7	
8	D56
9	W81
10	
11	W82
11	W82
12	
13	
13	
14	D87
14	D87
15	W93
16	D53

	K817
1	G135
1	G135
2	G151
2	G151
3	1G142
4	
4	W55
5	W55
5	
6	2G142
7	
8	G135
9	1G141
10	
11	1G143
12	
12	G151
13	
14	2G143
15	W93

	K817
15	W93
16	2G141

	K818
1	1D139
2	G151
3	
4	
4	
5	W55
5	
6	
7	
8	2D139
9	1D130
10	
11	1D131
11	1D131
12	
13	
13	
14	2D131
14	2D131
15	W93
16	2D130

	K821
1	1D141
2	D159
3	
4	
5	
6	
7	
8	2D141
9	1D132
9	1D132
10	
11	1D131
12	
13	
14	2D131

	K821
15	W56
16	2D132
16	2D132

	K1002
A1	L45
A2	L48
A2	L48
A3	L46
B1	W277
B2	W211
B3	
C1	L77
C2	L52
C2	L52
C3	L57
D1	
D2	
D3	
X1	L56
X2	L31

	K1003
A	X33
B	X60
+	V27
-	V34

	K1004
-	V34
A	X27
B	X59
+	V1
+	V1
-	V51
-	V51
-	V51

© COPYRIGHT, 1981 BY ROCKWELL INTERNATIONAL

K1008

1	X33
2	V36
3	X61
4	X62
5	X58
6	X63
7	
8	X31
9	V8
10	
11	V11
12	
13	V34
14	V13
15	V34
16	V8

K1009

A1	H95
A2	H96
X1	H42
X2	H178'

K1010

1	G5
1	G5
2	G34
3	G35
4	
5	
6	G36
7	
8	G4
9	G5
10	G5
11	G37
12	
13	
14	G38
15	G40
16	G4
16	G4

K1020

1	
2	G24
3	
4	
5	
6	G135
7	G134
8	G133

K1021

A1	F403
A1	F403
A2	F404
A2	F404
A3	
B1	F418
B1	F418
B2	F419
B2	F419
B3	
C1	F415
C1	F415
C2	F416
C2	F416
C2	F416
C2	F416
C3	
D1	
D2	
D3	
X1	F423
X2	F424

K1022

1	
2	P76
3	1D166
4	F36
4	F36
5	1D167
6	P43
6	P43

K1022

7	
8	
9	
10	
11	V5
11	V5
12	
13	V4
14	
15	1P72
16	

K1023

1	
2	P76
3	2D166
4	F36
5	2D167
6	P43
7	
8	
9	
10	
11	V3
11	V3
12	
13	V4
14	
15	2P72
16	

K1027

1	
2	H312
3	H311
4	H310
5	H310
6	H311
7	H313
8	

© COPYRIGHT, 1981 BY ROCKWELL INTERNATIONAL

K1028

1	3K901
2	1J2
3	1J1
4	
5	1J5
6	
7	1J6
8	

K1029

1	
2	2J2
3	2J1
4	
5	2J5
6	
7	2J6
8	

K1040

1	H84
2	
2	H83
3	H85
4	1P219
5	
6	
A1	
A2	H85
A3	H84
B1	1P219
B2	1P220
B3	
C1	2P219
C2	2P220
C3	
D1	
D2	
D3	
X1	H82
X2	H83
7	

K1040

8	
9	
10	
11	
11	
12	
13	2P219
14	
15	H82
16	

K1041

A1	BUS
A1	2P17
A2	P33
A2	P33
A2	P33
A2	BUS
X1	P12
X2	2P17

K1045

A1	BUS
A1	BUS
A2	P45
A2	P45
A2	BUS
X1	1P205
X2	P101

K1046

A1	P26
A1	P26
A1	P26
A1	P26
A1	P26
A1	P26
A1	BUS
A2	BUS

K1046

A2	BUS
X1	2P205
X2	P155

K1047

G	1P213
T	1P221

K1048

G	2P213
T	2P221

K1049

A	1P76
A	1P76
A	1P76
A	1P76
A	1P76
A	1P76
B	1P76
B	1P76
B	1P76
B	1P76
B	1P76
B	1P76
C	BUS
G	P67
T	1P221

K1050

A	2P76
A	2P76
A	2P76
A	2P76
A	2P76
A	2P76

© COPYRIGHT, 1981 BY ROCKWELL INTERNATIONAL

K1050

B	2P76
B	2P76
B	2P76
B	2P76
B	2P76
B	2P76
C	BUS
G	P67
T	2P221

K1051

1	V5
2	V19
3	V10
4	V64
5	V64
6	V18
7	
8	
9	
10	
11	V3
12	H166
13	V8
14	H191
15	V28
16	H163

K1052

1	H176
2	V28
3	H179
4	
5	H172
6	H190
7	V19B
8	V163

K1055

1	
2	1Q102A18
3	1Q103B18
4	
5	1Q10
6	
7	P53
8	

K1056

1	
2	2Q102
3	2Q103
4	
5	2Q10
6	
7	P53
8	

K1057

1	2P203
2	1P203
3	2P204
4	1P204
5	
6	P90
7	
8	
9	
10	
11	P84
12	P46
13	P206
14	P44
15	1P202

K1058

1	1P203
2	2P203

K1058

3	1P204
4	2P204
5	
6	P145
7	
8	
9	
10	
11	P139
12	P46
12	P46
13	P206
14	P44
14	P44
15	2P202
16	

K1059

1	
2	P7
3	V5
4	
5	V3
6	P7
7	
8	P56
9	1P216
10	
11	1P215
12	
13	
14	2P215
15	P29
16	2P216

K1060

1	H207
1	H207
2	2H320
3	2H203
3	2H203
3	2H203

© COPYRIGHT, 1981 BY ROCKWELL INTERNATIONAL

	K1060
4	
5	
6	
7	H325
8	

	K1061
1	
2	F416
3	F404
4	
5	F403
6	
7	F421
8	

	K1062
1	2H323
2	2H321
3	2H203
3	2H203
3	2H324
3	2H324
4	
5	2H322
6	
7	H325
8	

	K1063
1	1H323
2	1H321
3	1H203
3	1H203
3	1H324
3	1H324
4	
5	1H322
6	
7	H325
8	

	K1064
1	H207
1	H207
1	H207
2	1H320
3	1H203
3	1H203
3	1H203
4	
5	
6	
7	H325
8	

	K1065
1	1G143
2	W93
3	1G141
4	1G151
5	2G151
6	2G141
7	W94
8	2G143

	K1066
C1	V58
C3	V57
T1	V6
L1	BUS

	K1067
C1	V62
C3	
C3	V61
L1	V42
L2	
T1	BUS
T2	

	K1069
1	
2	1K42
3	1K2
4	2K29
5	1K1
6	2K23
6	2K23
7	
8	
9	1D121
10	
11	1D124
12	
13	
14	1D133
14	1D133
14	1D133
15	D50
16	1D130
16	1D130

	K1070
1	
2	2K42
3	2K2
4	1K29
4	1K29
5	2K1
6	1K23
6	1K23
7	
8	
9	2D121
10	
11	2D124
12	
13	
14	2D133
14	2D133
14	2D133
15	D56
16	2D130
16	2D130

© COPYRIGHT, 1981 BY ROCKWELL INTERNATIONAL

K1071

1	
2	1K4
2	1K4
3	1K3
4	1K32
4	1K32
5	1K2
5	1K2
6	1K29
7	1K23
8	

K1072

1	
2	2K4
2	2K4
3	2K3
3	2K3
3	2K3
4	2K32
4	2K32
5	2K2
5	2K2
6	2K29
6	2K29
7	2K23
8	

K1073

1	1K3
1	1K3
2	1K31
3	1K4
3	1K4
4	
5	
6	
7	
8	1K30
9	1K26
9	1K26
10	
11	1D130

K1073

11	1D130
12	1K28
13	
14	1K27
15	1K38
16	

K1074

1	2K3
2	2K31
3	2K4
3	2K4
4	
5	
6	2K31
7	
8	2K30
9	2K26
9	2K26
10	
11	2D130
11	2D130
12	2K28
13	
14	2K27
15	2K38
16	

K1075

1	1K23
1	1K23
2	1K11
2	1K11
3	1K24
4	1K10
4	1K10
5	1K11
5	1K11
6	1K25
7	
8	1K4
8	1K4
9	1K5

K1075

10	
11	1K15
12	1K11
13	1K10
13	1K10
14	1K14
15	1K10
15	1K10
15	1K10
16	1K13

K1076

1	1K19
1	1K19
2	1K10
2	1K10
3	1K20
4	
5	1K10
5	1K44
6	1K16
7	1K11
7	1K11
7	1K11
8	1K6

K1077

1	
2	1K42
3	1K19
4	1K26
4	1K26
5	1K4
5	1K4
6	1D139
7	
8	
9	
10	
11	1K7
12	1K26
12	1K26
13	1K8

© COPYRIGHT, 1981 BY ROCKWELL INTERNATIONAL

K1077

14	1K28
15	1K36
16	

K1078

1	
2	2K42
3	2K19
4	2K26
4	2K26
5	2K4
5	2K4
6	2D139
7	
8	
9	
10	
11	2K7
12	2K26
12	2K26
13	2K8
14	2K28
15	2K36
16	

K1079

1	1K6
1	1K6
2	1K27
3	1K7
4	1K26
4	1K26
5	
6	1K27
6	1K27
7	1K31
8	

K1080

1	2K6

K1080

1	2K6
2	2K27
3	2K7
4	2K26
4	2K26
5	
6	2K27
6	2K27
7	2K31
8	

K1081

1	
2	1K8
3	1K34
4	1K33
5	1K26
5	1K26
6	1K31
7	1K9
7	1K9
8	

K1082

1	
2	2K8
3	2K34
4	2K33
5	2K26
5	2K26
6	2K31
7	2K9
7	2K9
8	

K1083

1	2K23
1	2K23
2	2K11
2	2K11

K1083

3	2K24
4	2K10
4	2K10
5	2K11
5	2K11
6	2K25
7	
8	2K4
8	2K4
9	2K5
10	
11	2K15
12	2K11
13	2K10
13	2K10
14	2K14
15	2K10
15	2K10
15	2K10
16	2K13

K1084

1	2K19
1	2K19
2	2K10
2	2K10
2	2K10
3	2K20
4	
5	2K10
5	2K44
6	2K16
7	2K11
7	2K11
7	2K11
8	2K6
8	2K6

K1085

1	1D124
2	1D124
2	1D124
3	1D126

© COPYRIGHT, 1981 BY ROCKWELL INTERNATIONAL

K1085

4	1D125
4	1D125
5	
6	1K42
7	1D125
8	

K1086

1	2D124
2	2D124
2	2D124
3	2D126
4	2D125
4	2D125
5	
6	2K42
7	2D125
8	

K1087

1	1D133
2	1D133
2	1D133
3	1D134
4	1D135
4	1D135
5	
6	1K42
7	1D135
8	

K1088

1	2D133
2	2D133
2	2D133
3	2D134
4	2D135
4	2D135
5	
6	2K42
7	2D135
8	

K1089

1	
2	G32
3	H40
4	H80
5	H40
6	H80
7	G33
8	

K1090

1	1D151
2	D147
3	D161
3	D154
4	
5	D142
6	D154
7	D149
8	1D151

K1091

1	
2	D153
3	D155
4	D142
5	D142
6	D156
7	D154
8	

K1092

1	P19
1	P19
2	D155
3	D152
3	D152
4	
5	
6	D152
7	D152
7	D152
8	P27
8	P27

K1094

1	P57
2	3K25
3	P19
4	
5	
6	P27
7	D152
8	P54

K1095

1	D151
2	
3	
4	
5	
6	D154
6	
6	
7	
8	2D151
9	3D151
10	
11	D154
11	
12	
13	
14	
15	D163
16	

© COPYRIGHT, 1981 BY ROCKWELL INTERNATIONAL

K1096

1	
2	D162
3	D163
3	D163
4	2P214
5	
6	2D165
7	
8	
9	
10	
11	1D165
12	
13	1P214
14	
15	D161
15	
16	

K1097

1	
2	1K43
2	1K43
3	1K10
3	1K10
4	1K11
4	1K11
5	K22
5	K22
6	1K43
7	
8	
9	
10	
11	1D133
11	1D133
12	1K19
13	1K26
14	D138
14	1K44
15	1D133
15	1D133
16	

K1098

1	
2	2K43
2	2K43
3	2K10
3	2K10
4	2K11
4	2K11
5	K22
6	2K43
7	
8	
9	
10	
11	2D133
11	2D133
12	2K19
13	2K26
14	2K44
15	2D133
15	2D133
16	2K10

K1219

A1	X65
A2	X27
A3	X19
B1	X85
B2	X28
B3	X18
C1	X66
C2	X29
C3	X84
D1	X86
D2	X30
D3	X26
X1	V20
X2	V21

K1220

1	X58
2	V14
3	X24
4	X83

K1220

5	X67
6	X23
7	
8	X58
9	X82
10	
11	X22
12	X81
13	X68
14	X21
15	V13
16	X62

K1221

1	
2	H171
3	X65
4	X70
5	X69
6	X66
7	
8	
9	X73
10	
11	X71
12	
13	
14	X72
15	H176
16	X74

K1222

1	H266
2	H173
3	H150
4	H112
5	H269
6	H114
7	
8	H113
9	
10	
11	X67

© COPYRIGHT, 1981 BY ROCKWELL INTERNATIONAL

	K1222
12	X72
13	X71
14	X68
15	H172

	K1223
1	
2	H164
3	X65
4	X76
5	X75
6	X66
7	
8	
9	X79
10	
11	X77
12	
13	
14	X78
15	H163
16	X80

	K1224
1	H275
2	H167
3	H150
4	H131
5	H278
6	H133
7	
8	H132
9	
10	
11	X67
12	X78
13	X77
14	X68
15	H166
16	

	K1225
C1	V17
C3	V16
L1	V23
T1	BUS

	K1226
1	
2	Q57
3	Q167
4	
5	Q164
6	Q165
7	
8	Q164
8	Q164
9	Q21
A1	Q164
A2	Q167
A3	
B1	
B2	Q165
B3	Q164
B3	Q164
C1	Q21
C2	Q21
C3	Q163
D1	
D2	
D3	
E1	
E2	
E3	
F1	
F2	
F3	
X1	Q169
X2	Q170
10	
11	W163
12	
13	
14	
15	Q169
16	

	K1227
1	Q168
2	Q57
2	Q57
3	Q167
4	Q165
6	Q166
7	
8	
9	
A1	Q165
A2	Q166
A3	
B1	
B2	Q168
B3	Q167
C1	
C2	Q163
C3	Q162
D1	
D2	
D3	
E1	
E2	
E3	
F1	
F2	
F3	
X1	Q171
X2	Q172
10	
11	Q163
12	
13	
14	
15	Q171
16	

	K1228
1	V3
2	V47
3	V38
4	H172
5	V8
6	H175
7	

© COPYRIGHT, 1981 BY ROCKWELL INTERNATIONAL

K1228

8	H179
9	H190
10	
11	H162
12	H166
13	
14	H165
15	V51
16	H191

K1229

1	V5
2	V54
3	V52
4	
5	
6	V38
7	V55
8	V3

K1236

1	H271
2	H173
3	H113
4	H272
5	
6	H273
7	
8	
9	H266
10	
11	H267
12	H111
13	H269
14	H274
15	H172
16	

K1237

1	H280
2	H167
3	H132
4	H282
5	
6	H283
7	
8	
9	H275
10	
11	H276
12	H130
13	H278
14	H284
15	H166
16	

K1238

1	H150
2	H267
3	H136
4	
5	
6	
7	H268
8	

K1239

1	H150
2	H276
3	H138
4	
5	
6	
7	H277
8	

K1240

1	2D132
2	2K4
3	2D131
4	H405
5	
6	H404
7	2K23
8	H408

K1241

1	1D132
2	1K4
3	1D131
4	H405
5	
6	H408
7	1K23
8	H402

K1257

A1	
A2	2D122
A2	2D122
A3	2D123
A3	2D123
B1	
B2	2D131
B2	2D131
B3	2D132
B3	2D132
C1	
C2	1D140
C3	1D141
D1	
D2	1D122
D2	1D122
D3	1D123
D3	1D123
E1	
E2	1D131
E2	1D131
E3	1D132
F1	
F2	2D140

© COPYRIGHT, 1981 BY ROCKWELL INTERNATIONAL

	K1257
F2	2D140
F3	2D141
X1	W56
X2	W94

© COPYRIGHT, 1981 BY ROCKWELL INTERNATIONAL

TIME DELAY RELAYS

TM500

1	M13
2	M26
3	M60
4	M25
5	
6	
7	
8	M31

TM501

1	V52
1	
2	
3	
4	
4	V38
5	V38
5	
6	
7	V54
8	V53

TM503

1	1H324
2	1H324
2	H325
3	H325
4	
5	1H20
5	1H20
6	H207
6	H207
6	H207
6	H207
7	1H203
7	1H203
8	
9	
10	

TM504

1	2H324
2	2H324
2	H325
3	H325
4	
5	2H20
5	2H203
6	H207
6	H207
6	H207
6	H207
7	2H203
7	2H203
8	
9	
10	

TM506

1	2J5
1	2J5
2	2W202
2	2W202
3	2W231
4	2W236
4	2W236
4	2W236
5	
6	1J1
7	1J5
8	
9	2J1
9	2J1
10	

TM507

1	2J5
2	1W202
2	1W202
2	1W202
3	1W231

TM507

4	1W236
4	1W236
4	1W23
5	
6	1J1
6	1J1
7	1J5
7	1J5
8	
9	2J1
10	

TM508

1	2W202
2	W262
2	W262
2	2W202
3	
4	
5	2W262
6	2W245
7	
8	
9	
10	

TM509

1	1W202
2	1W244
2	
3	
4	
5	1W262
6	1W245
6	
7	
8	
9	
10	

© COPYRIGHT, 1981 BY ROCKWELL INTERNATIONAL

TM510

1	2G152
2	D115
3	D160
4	
5	
6	1G154
7	1G152
8	
9	2G154
10	
11	

TM513

1	D163
2	D164
3	
4	2D165
5	2D166
6	
7	1D165
8	1D166
9	
10	

TM521

1	1Q119
2	1K50
2	1K50
3	
4	
5	1Q117
6	1Q116
6	1Q116
7	H405
7	H405
8	H406
9	H404
9	H404
10	

TM522

1	2Q119
2	2K50
2	2K50
3	
4	
5	2Q117
6	2Q116
6	2Q116
7	H405
8	H406
9	H404
10	

© COPYRIGHT, 1981 BY ROCKWELL INTERNATIONAL

WIRING DIAGRAM CROSS REFERENCE

SCHEMATIC NUMBER	NOMENCLATURE	CHAPTER
B1.1-1	DC Generator System	24
B1.1-2	DC Generator System	24
B1.1-3	DC Generator System	24
B2.1	DC Bus Tie-in System	24
B2.2	DC Bus Tie-in System	24
B3.1-1	DC Power Distribution System	24
B3.1-2	DC Power Distribution System	24
B3.1-3	DC Power Distribution System	24
B3.1-4	DC Power Distribution System	24
B5.1	AC Power Distribution System	24
B6.1	AC Instrument and Indirect Lighting System	24
B7.1	Electrical Ground System	24
B7.2	Electrical Ground System	24
B8.1-1	AC Inverter System	24
B8.1-2	AC Inverter System	24
B8.2-2	AC Inverter System — Solid State Inverters	24
B10	Auxiliary Power Unit System	49
B10.1	Auxiliary Power Unit System	49
C1.1	Fuel Cross Feed System	28
C1.2	Fuel Cross Feed System	28
C2.1	Fuel Boost System	28
C2.2	Fuel Boost System	28
C3.1	Fuel Boost Warning System	28
C4.1	Fuel Shut-off System	28
C4.2	Fuel Shut-off System	28
C5.1	Engine Oil Low Pressure Warning	77
C6.1	Engine Oil Pressure Indicator	77
C9.1	Engine Start System	80
C9.2	Engine Start System	80
C10.1	Engine Ignition System	74
C11.1	Fuel and Oil Temperature Indicating System	77
C12.1	Fuel Drain Recovery System	28
C12.2	Fuel Drain Recovery System	28
D1.1	Emergency Lighting System	33
D2.1	Caution Warning & Indicator Lights Dim & Test System	33
D2.2	Caution Warning & Indicator Lights Dim & Test System	33
D3.1	Cabin Entrance & Passengers Reading Light (Prov)	33

© COPYRIGHT, 1987 BY SABRELINER CORPORATION

WIRING DIAGRAM CROSS REFERENCE (Continued)

SCHEMATIC NUMBER	NOMENCLATURE	CHAPTER
D5.1	Flood Light System	33
D8.1	Passengers Dome, Coat & Baggage Compartment Lighting System	33
D9.1	Thunderstorm Lights System	33
D10.1	Cockpit Dome, Map & Utility Lighting System	33
D16.1	Console Indirect Lighting System	33
D17.1	Engine, Radio & Instrument Indirect Lighting System	33
D18.1	Standby Compass, Pedestal, Overhead & LH Outboard Instrument Panel Indirect Lighting System	33
D19.1	Aft Fuselage Compartment Lighting System	33
D20.1	Landing and Taxi Light System	33
D20.2	Landing and Taxi Light System	33
D21.1	Position and Anti-collision Lights System	33
D22.1	Ice Check Lights System	33
D23.1	High Intensity Lights	33
E1.1	Landing Gear Control System	32
E2.1	Landing Gear Position Indicating & Warning System	32
E2.2	Landing Gear Position Indicating & Warning System	32
E3.1-1	Nose Gear Steering System	32
E3.1-2	Nose Gear Steering System	32
E3.1-3	Nose Gear Steering System	32
E3.2-1	Nose Gear Steering System	32
E3.2-2	Nose Gear Steering System	32
E3.2-3	Nose Gear Steering System	32
E4.1	Modulating Anti-skid Control System	32
E4.2	Modulating Anti-skid Control System	32
F1.1-1	Cabin Pressure & Temperature Control and Warning	21
F1.1-2	Cockpit & Cabin Temperature Control and Warning	21
F1.1-3	Three Wheel Cooling Package	21
F2.1	Nose Ground Cooling Blower & Pressure Fail System	21
F4.1	Door Seal and Lock Indicator System	21
F5.1	Aft Fuselage Overheat Indicating System	21
F6.1	Vacuum Pump System	21
G2.1	Engine Anti-ice System	75
G3.1	Ram Air Inlets Anti-ice System	30
G4.1	Fuel Filter Warning System	28
G5.1-1	Windshield and Side Window Anti-ice Control System	30
G5.1-2	Windshield Anti-ice Power System	30
G6.1	Pitot Heat System	30

© COPYRIGHT, 1987 BY SABRELINER CORPORATION

WIRING DIAGRAM CROSS REFERENCE (Continued)

SCHEMATIC NUMBER	NOMENCLATURE	CHAPTER
G9.1	Pneumatic Boots System	30
G10.1	Foot Heaters System	21
H1.1	Cabin Pressure, Warning Signs, Oxygen Flow and Oxygen Pressure Systems	21
H1.2	Cabin Pressure, Warning Signs, Oxygen Flow and Oxygen Pressure Systems	21
H3.1	Engine Fire Detector System	26
H4.1	Engine Fire Extinguisher System	26
J1.1	Turn & Slip Indicator — Pilots & Co-pilots	34
J2.1	Trim Position Indicating System	27
J4.1	Free Air Temperature Indicating System	34
J5.1	Fuel Flow Indicating System	28
J6.1	Fuel Quantity Indicating System	28
J7.1	Hydraulic Pressure Indicating System	29
J10.1	Hour Meter	31
J12.1	RPM Speed Indicator	77
J14.1	Exhaust Temperature Indicating System	77
J17.1	Mach Airspeed Warning System	34
J18.1	Engine Pressure Ratio System	77
J19.1	Battery Temperature Indicating and Control	24
K1.1	Windshield Wiper System	30
K2.1	Instrument Panel Vibrators	31
K3.1-1	LH Engine Thrust Reverser Control System	78
K3.1-2	RH Engine Thrust Reverser Control System	78
K3.1-3	Thrust Reverser Indicating System	78
K3.2-3	Thrust Reverser Indicating System	78
K3.2-1	Engine Thrust Reverser Control System (LH)	78
K3.2-2	Engine Thrust Reverser Control System (RH)	78
L1.1-1	Flight Control Trim System	27
L1.1-2	Flight Control Trim System	27
L1.1-3	Trim Disconnect System	27
L2.1	Flap Control & Position Indicating System	27
L6.1	Hydraulic Pump System	29
L6.2	Hydraulic Pump System	29
L6.3	Hydraulic Pump System	29
L6.4	Hydraulic Pump System	29
L7.1	Stall Warning System R.H.	34
L7.2	Stall Warning System L.H.	34
L8.1	Control Wheel and Column	27

© COPYRIGHT, 1987 BY SABRELINER CORPORATION

WIRING DIAGRAM CROSS REFERENCE (Continued)

SCHEMATIC NUMBER	NOMENCLATURE	CHAPTER
M1.1-1	Engine Pylon Firewall Disconnects — LH	71
M1.1-2	Engine Pylon Firewall Disconnects — RH	71
R1.1-1	Audio System—Provisions	23
R1.1-2	Magnetic Compass — Provisions	34
R1.1-3	Avionics Antennas — Provisions	23

© COPYRIGHT, 1987 BY SABRELINER CORPORATION

COMPONENT LOCATION

The aircraft component locations section consists of a matrix (Table 1) and illustrations (figure 1), that depict major components within the airplane. When troubleshooting a particular system of the airplane using the electrical wiring diagrams in this manual and a component is found faulty, the reference designator (RDI) of the faulty component may be found adjacent to the component on the applicable electrical wiring diagram. With the RDI number known, the alphabetized matrix is used to locate the figure 1 sheet and view that shows the component location. Two views may be used for single RDI number in the matrix. Each view is applicable to one group of airplanes.

© COPYRIGHT, 1989 BY SABRELINER CORPORATION

RDI	NAME	SHEET	VIEW
BT500	LH BATTERY	1	B
BT501	RH BATTERY	1	B
B516	BLOWER	1	C
B523	VAC PUMP	1	C
CM502	RH STALL WARN	5	—
CM503	LH STALL WARN	5	—
CN1	SPEED SWITCH	10	T
CN1000	ANTI-SKID CONT	5	—
CN1003	LH WNDSHLD TEMP CONT	2	F
CN1004	RH WNDSHLD TEMP CONT	2	F
CN2	APU TEMP CONT	10	T
CN4	CONTROLLER — APU	10	T
CN5	CONTROLLER — APU	10	T
CN500	CABIN AIR TEMP CONT	6	L
CN501	NLG STEERING CONT	1	C
CN502	CABIN AIR CONT	6	K
CN503	LDG WARN CONT	3	G
CN508	INV CHANGEOVER	1	C
CN510	MACH AIRSPEED WARN	3	G
CN513	RH FIRE DET CONT	5	—
CN514	LH FIRE DET CONT	5	—
CN515	STBY NOSE STEER CONTROL	1	C
CN901	LH DC GEN CONT	5	—
CN902	RH DC GEN CONT	5	—
CR1010	DIODE	5	—
CR1012	DIODE	2	E
CR1015	DIODE	2	E
CN1017	DIODE	4	J
CR1018	DIODE	4	J
CR1019	DIODE	4	J
CR1020	DIODE	4	J
CR1021	DIODE	4	J
CR1022	DIODE	4	J
CR1023	DIODE	4	J
CR1024	DIODE	4	J
CR1025	DIODE	4	J
CR1026	DIODE	4	J
CR1027	DIODE	4	J
CR1028	DIODE	4	J
CN1034	DIODE	4	J
CR1038	DIODE	5	B
CR1039	DIODE	5	B
CR1040	DIODE	5	—
CR1041	DIODE	5	—
CR1042	DIODE	5	—
CR1043	DIODE	5	—
CR1044	DIODE	4	J
CR1045	DIODE	5	E
CR1046	DIODE	5	E
CR1048	DIODE	4	J
CR1049	DIODE	4	J
CN1050	DIODE	4	J
CR1051	DIODE	4	J
CR1052	DIODE	4	J
		6	L
CR1053	DIODE	4	J
		6	L
CR1054	DIODE	4	J
		6	L
CR1055	DIODE	4	J
		6	L
CR4032	DIODE	10	T
CR504	DIODE	4	J
CR511	DIODE	5	—
CR512	DIODE	5	—
CR513	DIODE	8	R
CR514	DIODE	8	R
CR515	DIODE	8	R
CR516	DIODE	8	R
CR517	DIODE	8	R
CR518	DIODE	8	R
CR520	DIODE	5	—
CR521	DIODE	5	—
CR522	DIODE	5	—
CR523	DIODE	8	R
CR524	DIODE	8	R
CR525	DIODE	8	R
CR526	DIODE	8	R
CN527	DIODE	8	R
CR528	DIODE	8	R
CR540	DIODE	8	R
CR541	DIODE	8	R
CR542	DIODE	8	R
CR543	DIODE	8	R
CR544	DIODE	5	B
CR547	DIODE	5	B
CR548	DIODE	5	B
CR552	DIODE	5	D
CR553	DIODE	5	D
CR560	DIODE	4	J
CR561	DIODE	4	J
CR562	DIODE	4	J
CR563	DIODE	4	J
CN564	DIODE	4	J
CR565	DIODE	4	J
CR6	DIODE	10	T
C1000	CAPACITOR	2	F
C1001	CAPACITOR	2	F
C1002	CAPACITOR	2	F
DS123	TAIL LIGHT	8	R
DS502	AFT FUS LIGHT	8	R
DS503	AFT FUS LIGHT	8	R
DS523	LND, TAXI LIGHT	1	C
DS524	LND, TAXI LIGHT	1	C
DS527	LIGHT ASSEMBLY	8	R

COMPONENT LOCATION

© COPYRIGHT, 1989 BY SABRELINER CORPORATION

RDI	NAME	SHEET	VIEW
DS528	LIGHT ASSEMBLY	8	R
DS530	ANTI-COLL. LIGHT	6	K
DS552	EMER. LIGHT	6	K
DS608	TAIL LIGHT	8	R
D1000	INVERTER, NO. 2	1	C
D1001	INVERTER, NO. 1	1	C
D1002	INVERTER, INST	1	A
HR520	BATT VENT	1	B
HR521	BATT VENT	1	B
KB4000	JUNCTION, BOX	10	U
KT500	STALL WARN FLASHER — RH	4	J
KT501	STALL WARN FLASHER — LH	4	J
KT9	BLEED AIR — APU	10	T
K1	START CONT — APU	10	T
K1002	LND, LIGHT	1	C
K1003	INST. INV	2	E
K1004	INV. FAIL	2	E
K1008	AC BUS CONT	2	E
K1009	GND BLOWER	1	C
K1010	NOSE STEER	5	B
K1020	ANTI-SKID	5	B
K1021	PITOT HT PWR	5	—
K1022	LH GEN MON NO. 3	5	C
K1023	RH GEN MON NO. 3	5	C
K1027	FOOT HTR	5	D
K1028	LH IGN CONT	5	B
K1029	RH IGN CONT	5	B
K1036	RH ENG FIRE WARN	4	J
K1037	LH ENG FIRE WARN	4	J
K1038	RH ENG FIRE — SHUT-OFF NO. 2	4	J
K1039	LH ENG FIRE — SHUT-OFF NO. 2	4	J
K1040	VAC PUMP CONT	4	J
K1041	BATT ISOL	1	B
K1045	LH START CONT	5	E
K1046	RH START CONT	5	E
K1047	LH FEEDER PROT.	7	N
K1048	RH FEEDER PROT.	7	N
K1049	LH GEN. FEEDER	5	E
K1050	RH GEN FEEDER	5	E
K1051	AC TRAN. NO. 1	2	E
K1052	AC TRAN. NO. 2	2	E
K1057	LH ENG START NO. 2	5	A
K1058	RH ENG START NO. 2	5	A
K1059	EXT PWR NO. 2	5	A
K1060	RH AIR INTAKE ANTI-ICE FAIL	5	A
K1061	STALL WARN & EPR HEAT	5	A
K1062	RH ENG ANTI-ICE SOL. FAIL	5	A
K1063	LH ENG ANIT-ICE SOL. FAIL	5	A
K1064	LH AIR INTAKE ANTI-ICE VALVE FAIL	5	A
K1065	ANTI-SKID	4	J
K1066	INST. INV PWR	5	—
K1067	No. 1 INV PWR	5	—
K1069	LH T/R LDG DOWN-LOCK	4	J
K1070	RH T/R LDG DOWN-LOCK	4	J
K1071	LH T/R ARM HOLD	4	J
K1072	RH T/R ARM HOLD	4	J
K1073	LH T/R LATCH	4	J
K1074	RH T/R LATCH	4	J
K1075	LH T/R EMER STOW NO. 1	4	J
K1076	LH T/R EMER STOW NO. 2	4	J
K1077	LH T/R DEPLOY	4	J
K1078	RH T/R DEPLOY	4	J
K1079	LH PWR LEVER LOCKOUT	4	J
K1080	RH T/R PWR LEVER LOCKOUT	4	J
K1081	LH T/R PWR LEVER LOCKOUT	4	J
K1082	RH T/R PWR LEVER UNLOCK	4	J
K1083	RH T/R EMER. STOW NO. 1	4	J
K1084	RH T/R EMER. STOW NO. 2	4	J
K1085	LH T/R CAUTION LT. NO. 1	4	J
K1086	RH T/R CAUTION LT. NO. 1	4	J
K1087	LH T/R CAUTION LT. NO. 2	4	J
K1088	RH T/R CAUTION LT. NO. 2	4	J
K1089	LDG POS. MON. (OELO DISABLE)	5	D
K1090	LH AND RH GEN CONT LIMITER	5	D
K1091	BATT TEMP DISC.	5	D
K1092	BATT DISCONNECT	5	D
K1093	NO. 1 BATT DISC.	5	D
K1094	APU GEN MON.	5	D
K1095	GEN VOLT LIMITER	5	D
K1096	TEMP. MON (120°)	4	J
K1097	LH T/R AUTO STOW	4	J
K1098	RH T/R AUTO STOW	4	J
K11	EGT TEST #1 — APU	10	T

COMPONENT LOCATION

© COPYRIGHT, 1989 BY SABRELINER CORPORATION

RDI	NAME	SHEET	VIEW
K12	EGT TEST #2 — APU	10	T
K1219	NO. 2 INV. DELTA WYE	2	E
K1220	INST. DELTA WYE	2	E
K1221	LH WNDSHLD HEAT CONTROL	2	E
K1222	LH WNDSHLD EMER. HEAT CONT	2	E
K1223	RH WNDSHLD HEAT CONT	2	E
K1224	RH EMERG. WND-SHLD HEAT CONT	2	E
K1225	NO. 2 INV PWR	5	—
K1226	FUEL BOOST MON — LH	4	J
K1227	FUEL BOOST MON — RH	4	J
K1228	NO. 2 INV FAIL	2	E
K1229	NO. 2 INV T.D.	2	E
K1236	LH EMER WNDSHLD HEAT CONT NO. 2	2	E
K1237	RH EMER WNDSHLD HEAT CONT NO. 2	2	E
K1238	LH WNDSHLD PWR OFF	2	E
K1239	RH WNDSHLD PWR OFF	2	E
K1240	RH T/R ARM HOLD NO. 2	4	J
K1241	LH T/R ARM HOLD NO. 2	4	J
K1257	ADT NO. 5	4	J
K14	OVERSPEED TEST NO. 2 — APU	10	T
K15	OVERHEAT SHUT-DOWN APU	10	T
K16	OVHT TEST #1 APU	10	T
K17	OVHT TEST #2 APU	10	T
K18	UNDERSPEED DROP-OUT — APU	10	T
K2	START — APU	10	T
K3	RUN — APU	10	T
K4	90% SPEED DROPOUT APU	10	T
K4000	START CONT — APU	10	U
K4001	REV. CURRENT — APU	10	U
K4002	EXT PWR MON	10	U
K4005	GEN OVHT — APU	10	U
K4006	GEN OVHT TEST — APU	10	U
K4007	OVHT SHUTDOWN — APU	10	U
K4010	RH ENG. MON.	10	U
K4014	GEN MON NO. 2 — APU	10	U
K4015	MOTORING — APU	10	U
K5	OIL PRESS SHUT-DOWN — APU	10	T
K500	LH ENG FIRE SHUT—OFF NO. 1	5	A
K501	RH ENG FIRE SHUT—OFF NO. 1	5	A
K502	PARALLEL START	1	B
K506	OXY HORN CUTOUT	4	J
K507	CABIN PRESS FAIL	5	—
K508	LH REV CURRENT	5	E
K509	RH REV CURRENT	5	E
K510	BATTERY	5	E
K511	BATT START	1	B
K512	BATT ISOLATION	1	B
K514	EXT POWER	5	—
K515	EXT START PWR MON.	5	A
K516	EXT POWER MON. NO. 1	5	C
K521	LH START PWR MON.	5	A
K522	RH START PWR MON.	5	A
K525	LH GEN MON NO. 1	5	C
K526	RH GEN MON NO. 1	5	C
K531	LH STAB TRIM	5	—
K532	RH STAB TRIM	5	—
K534	NOR. TRIM ARM NO. 1	5	B
K535	AIL TRIM	5	B
K536	RUD TAB TRIM	5	B
K538	NOSE DWN TRIM	8	R
K540	NOSE UP TRIM	8	R
K541	LH STAB TRIM DISC.	8	R
K542	RH STAB TRIM DISC.	8	R
K543	AIL AND RUDDER DISC.	8	R
K544	LH TRIM DISC.	8	R
K545	RH TRIM DISC.	8	R
K551	FIRE DET TEST	5	D
K552	LH START	5	A
K553	RH START	5	A
K555	LH JET LEVEL CONT	4	J
K560	TANK CROSS FEED OPEN	4	J
K561	TANK CROSS FEED CLOSE	4	J
K562	PUMP CROSS FEED OPEN	4	J
K563	PUMP CROSS FEED CLOSE	4	J
K564	RH FUEL BOOST	4	J
K565	RH FUEL BOOST CONT	4	J
K566	LH FUEL BOOST	4	J

COMPONENT LOCATION

© COPYRIGHT, 1989 BY SABRELINER CORPORATION

RDI	NAME	SHEET	VIEW
K567	LH FUEL BOOST CONT	4	J
K568	SECONDARY BUS	5	—
K569	TANK CROSS FEED WARN	4	J
K570	PUMP CROSS FEED WARN	4	J
K578	LDG WARN	4	J
K579	LDG WARN HORN	4	J
K580	WARN HORN CONT	4	J
K581	AUX WARN TEST #1	4	J
K582	AUX DIM TEST #1	4	J
K583	SPEED BRAKE CAUTION	4	J
K584	LH FUEL VALVE WARNING	4	J
K585	RH FUEL VALVE WARNING	4	J
K586	LH FUEL VALVE CLOSED	4	J
K587	RH FUEL VALVE CLOSED	4	J
K588	LH FUEL VALVE OPEN	4	J
K589	RH FUEL VALVE OPEN	4	J
K596	RAM AIR INLET ANTI-ICE, AIR	5	—
K597	RAM AIR INLET ANTI-ICE — GND	5	—
K6	EGT SHUTDOWN APU	10	T
K600	AC TRANSFER	2	E
K602	INST PWR FAIL	2	F
K603	CABIN PRESS DUMP	5	D
K607	NOSE GEAR CONT	3	G
K609	AUX WARN TEST #2	4	J
K610	AUX DIM TEST #2	4	J
K618	GND ELECT. CONT	5	C
K622	AUX WARN TEST #3	4	J
K623	AUX DIM TEST #3	4	J
K624	GND ELECT. TIE-IN	5	C
K626	NOSE GEAR STEER HOLD	5	B
K630	LH DC GEN OVHT	5	C
K631	RH DC GEN OVHT	5	C
K632	PASS OXY PRESS	4	J
K640	RAM AIR VALVE OPEN	5	C
K645	HYD PUMP MOT CONT	5	—
K646	MAIN INV FAIL	2	F
K647	LH GEN MON NO. 2	5	C
K648	RH GEN MON NO. 2	5	C
K649	SIDE WNDSHLD HEAT CONT	5	D
K650	RAM AIR VALVE GND OPEN	5	C
K657	LH STAB SPEED SELECT	5	B
K658	RH STAB SPEED SELECT	5	B
K660	HYD MOTOR LOCK-OUT — NO. 2	5	B
K661	HYD MOTOR LOCK-OUT — NO. 1	5	B
K662	HYD MOTOR PWR CONT	5	—
K663	LEFT JETTISON FUEL CONT	4	J
K664	RIGHT JETTSON FUEL CONT	4	J
K665	HYD PUMP MOTOR O'HEAT	5	B
K668	LH TANK SEL	5	D
K669	RH TANK SEL	5	D
K670	FUEL CROSS FEED	5	D
K678	ELECT PWR CONT	4	J
K679	EMER. PRESS FIRE SHUT-OFF	4	J
K680	GROUND ELECT CONT NO. 2	5	B
K690	AFT FUS OVHT TEST	5	D
K7	OVERSPEED SHUT-DOWN — APU	10	T
K706	HTR STALL WARN	5	C
K707	STBY STEER LOCK-OUT HOLD	1	C
K708	STBY STEER MON	1	C
K709	NOSE STEER TRSFER HOLD	1	C
K710	STBY RH STEER MON	1	C
K711	MAIN RH STEER MON	1	C
K712	MAIN LH STEER MON	1	C
K713	NOSE STEER TRSFER	7	M
K714	STBY STEER LOCK-OUT	7	M
K717	ALT NOSE UP	8	R
K718	ALT NOSE DWN	8	R
K719	EPR PITOT HEAT	5	D
K725	SPEED BRK OPEN	5	B

© COPYRIGHT, 1989 BY SABRELINER CORPORATION

RDI	NAME	SHEET	VIEW
K726	SPEED BRK CLOSE MON	5	B
K728	MLG LOAD MON NO. 1	5	C
K729	HYD PWR LITE FAIL	5	B
K731	STALL WARN TRAN HEAT	4	J
K732	MLG LOAD MON	4	J
K733	FLAP MON	4	J
K734	RH STALL MON	4	J
K735	LH STALL MON	4	J
K737	TEST BRIGHT AND DIM	4	J
K780	HYD LOW PRESS MON	5	D
K781	LDG UP VALVE MON	5	D
K782	BATT VENT HTR	5	B
K785	LH ANTI-SKID WARN	4	J
K786	RH ANTI-SKID WARN	4	J
K787	GND ELECT TIE-IN NO. 2	4	J
		6	L
K789	LH FUEL RECOVERY	4	J
		6	L
K790	RH FUEL RECOVERY	4	J
		6	L
K791	SPEED BRK OPEN WARN	4	J
		6	L
K792	FUEL RECOVERY ALT CONT	4	J
		6	L
K8	90% SPEED DROPOUT NO. 2	10	T
K811	AUX DIM TEST NO. 1	4	J
K812	AUX WARN TEST NO. 1	4	J
K813	AUX DIM TEST NO. 2	4	J
K814	AUX WARN TEST NO. 2	4	J
K815	AUX DIM TEST NO. 3	4	J
K816	AUX WARN TEST NO. 3	4	J
K817	AUX WARN TEST NO. 4	4	J
K818	AUX WARN TEST NO. 5	4	J
K819	BATT FAULT LT TEST	4	J
K820	FLAP MON	4	J
K821	AUX DIM TEST NO. 4	4	J
K822	NCU FEED-BACK INHIBIT	4	J
K841	BATT NO. 1 MON	5	D
K842	BATT NO. 2 MON	5	D
LS501	LDG WARN HORN	3	G
LS502	MACH AIRSPEED HORN	3	G
PS500	EMER LIGHT NO. 1	6	K
PS501	EMER LIGHT NO. 2	6	K
PS502	HI INT. LIGHTS	6	K
R10	RESISTOR	10	T
R1003		5	—
R1004		5	—
R1005		5	—
R1007		4	J
R1008		5	B
R1009		5	B
R1013		4	J
R1014		4	J
R1015		4	J
R1016		4	J
R1017		4	J
R1018		4	J
R1021		8	P
R1025		5	—
R1026		5	—
R1027		5	—
R11		10	T
R12		10	T
R15		10	T
R2		10	T
R3		10	T
R4		10	T
R4004		10	U
R4005		10	U
R5		10	T
R500		4	J
R508		7	N
R509		7	N
R510		4	J
R511		4	J
R512		4	J
R514		4	J
R515		4	J
R516		4	J
R517		4	J
R520		5	D
R521		5	D
R542		7	M
R561		7	M
R570		4	J
R571		4	J
R6		10	T
R7		10	T
R8	RESISTOR	10	T

COMPONENT LOCATION

© COPYRIGHT, 1989 BY SABRELINER CORPORATION

RDI	NAME	SHEET	VIEW
R9	RESISTOR	10	T
R901	↑	5	A
R902	↓	4	J
R903	RESISTOR	4	J
SS500	SENSOR-CABIN AIR-TEMP	6	K
SS502	SENSOR-DUCT AIR-TEMP	6	L
SS524	THERMOSTAT-WNDSHLD OVHT	3	H
SS525	THERMOSTAT-RH SIDE OVHT	4	J
SS526	THERMOSTAT-RH SIDE UPPER	4	J
SS538	THERMOSTAT-OVHT NO. 1	8	P
SS539	THERMOSTAT-OVHT NO. 2	8	P
SS540	THERMOSTAT-OVHT NO. 3	8	P
SS541	THERMOSTAT-OVHT NO. 4	8	P
SS542	THERMOSTAT-OVHT NO. 5	8	P
SS543	THERMOSTAT-OVHT NO. 6	8	P
SS544	THERMOSTAT-OVHT NO. 7	8	P
SS545	THERMOSTAT-OVHT NO. 8	8	P
SS546	THERMOSTAT-OVHT NO. 9	8	P
SS547	THERMOSTAT-OVHT NO. 10	8	P
SS551	THERMOSTAT-LH SIDE UPPER	3	H
SS552	THERMOSTAT-RH SIDE OVHT	4	J
SS553	THERMOSTAT-RH SIDE LWR WNDSHLD OVHT	4	J
S1001	CAPACITOR	2	F
S1011	PRESS-DE-ICING	1	C
S110	DUAL PARK VLV	1	C
S501	AFT FUS COMPT	8	R
S503	SPEED BRK LIMIT	6	K
S506	NLG LOAD	7	M
S509	THERMO-CABIN AIR SUPPLY	6	L
S510	THERMO-TEMP CONT SENSOR	6	L
S512	ENTRANCE DOOR	3	G
S529	CABIN PRESS FAIL	4	J
S569	LH MLG LOAD	7	M
S579	RH MLG LOAD	7	M

RDI	NAME	SHEET	VIEW
S588	EXT PWR RECT	6	K
S594	LH MLG UPLOCK	7	M
S596	RH MLG UPLOCK	7	M
S597	LH MLG DWNLOCK	7	M
S598	MLG DOWNLOCK	7	M
S599	RH MLG DWNLOCK	7	M
S638	HIGH PRESS	9	S
S651	STEER LIMIT	7	M
S661	LH STRUT DOOR	7	M
S662	RH STRUT DOOR	7	M
TB101	THERMINAL BOARD	3	H
TB1020	↑	4	J
TB1028		4	J
TB107		3	H
TB109		8	R
TB110		6	L
TB112		3	H
TB114		3	H
TB115		6	L
TB1201		1	C
TB1202		1	C
TB122		6	L
TB1222		1	B
TB132		3	H
TB134		3	H
TB3		10	T
TB4		10	T
TB4000		10	U
TB4006		10	T
TB505		4	J
TB512		4	J
TB513		3	H
TB515		4	J
TB517		3	H
TB521		3	H
TB532		8	R
TB535		3	H
TB540		6	K
TB541		1	C
TB544		6	L
TB548		3	H
TB551		4	J
TB581		3	G
TB582		3	G
TB593		6	L
TB596		1	A
TB600		4	J
TB610		8	P
TB611		8	P
TB612		8	P
TB613		8	P
TB614	↓	8	P
TB615	THERMINAL BOARD	8	P

COMPONENT LOCATION

© COPYRIGHT, 1989 BY SABRELINER CORPORATION

RDI	NAME	SHEET	VIEW
TB620	THERMINAL BOARD	1	C
TB635		8	P
TB637		7	N
TB638		7	N
TB639		7	N
TB640		7	N
TB641		7	N
TB642		7	N
TB643		5	—
TB644		5	—
TB645		5	—
TB647		5	—
TB648		2	E
TB649		8	R
TB650		8	R
TB651		5	—
TB652		2	E
TB653		5	E
TB654		2	E
TB655		2	E
TB656		5	—
TB657		5	—
TB658		5	—
TB659		5	—
TB675		5	—
TB676		6	L
TB677	THERMINAL BOARD	8	R
TM503	LH ENG ANTI-ICE	5	A
TM504	RH ENG ANTI-ICE	5	A
TM506	CONT. IGN — RH	4	J
TM507	CONT. IGN — LH	4	J
TM508	RH STALL WARN — ROTATION	4	J
TM509	LH STALL WARN — ROTATION	4	J
TM510	GND ELECT TIE-IN	4	J
TM513	TIME DELAY	4	J
TM520	LDG WARN	4	J
TM521	TIME DELAY	4	J
		6	L
TM522	TIME DELAY	4	J
		6	L
T501	INST NO. 1	3	G
T502	LH INDIRECT LTS	3	G
T503	RH INDIRECT LTS	3	G
T504	INST NO. 2	3	G
T506	INDIRECT LTS	3	G
T507	INDIRECT LTS	3	G
T508	WNDSHLD AUTO	1	B
T509	WNDSHLD AUTO	1	B
VV1002	LH ANTI-SKID CONTROL (LOWER)	1	C
VV1003	RH ANTI-SKID CONTROL (UPPER)	1	C
VV500	LH ENG BLEED AIR	9	S
VV501	CABIN AIR DUMP SOLENOID	1	D
VV502	RH ENG BLEED AIR	9	S
VV503	EMER RAM AIR	9	S
VV504	HOT AIR MIX	9	S
VV505	REG DOOR SEAL	9	S
VV506	DUCT TEMP CONT	9	S
VV513	DIRECTIONAL CONT	6	K
VV518	DIRECTIONAL CONT	7	M
VV520	CABIN AIR FLOOD FLOW	9	S
VV524	DUMP — 2 POSITION	6	K
VV525	HYD SHUT-OFF	6	L

COMPONENT LOCATION

© COPYRIGHT, 1989 BY SABRELINER CORPORATION

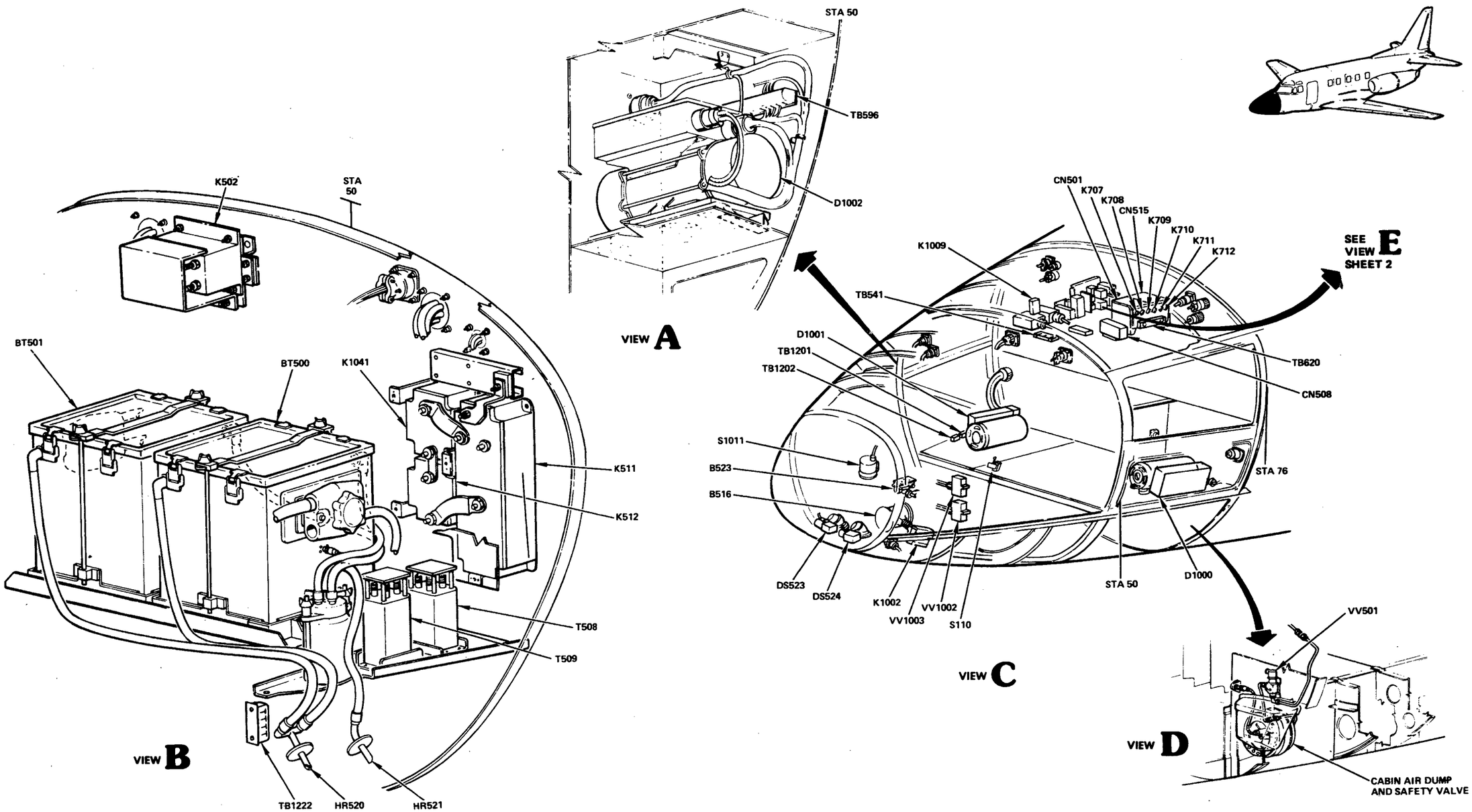

Figure 1 — Component Location Diagram (Sheet 1 of 10)

© COPYRIGHT, 1989 BY SABRELINER CORPORATION

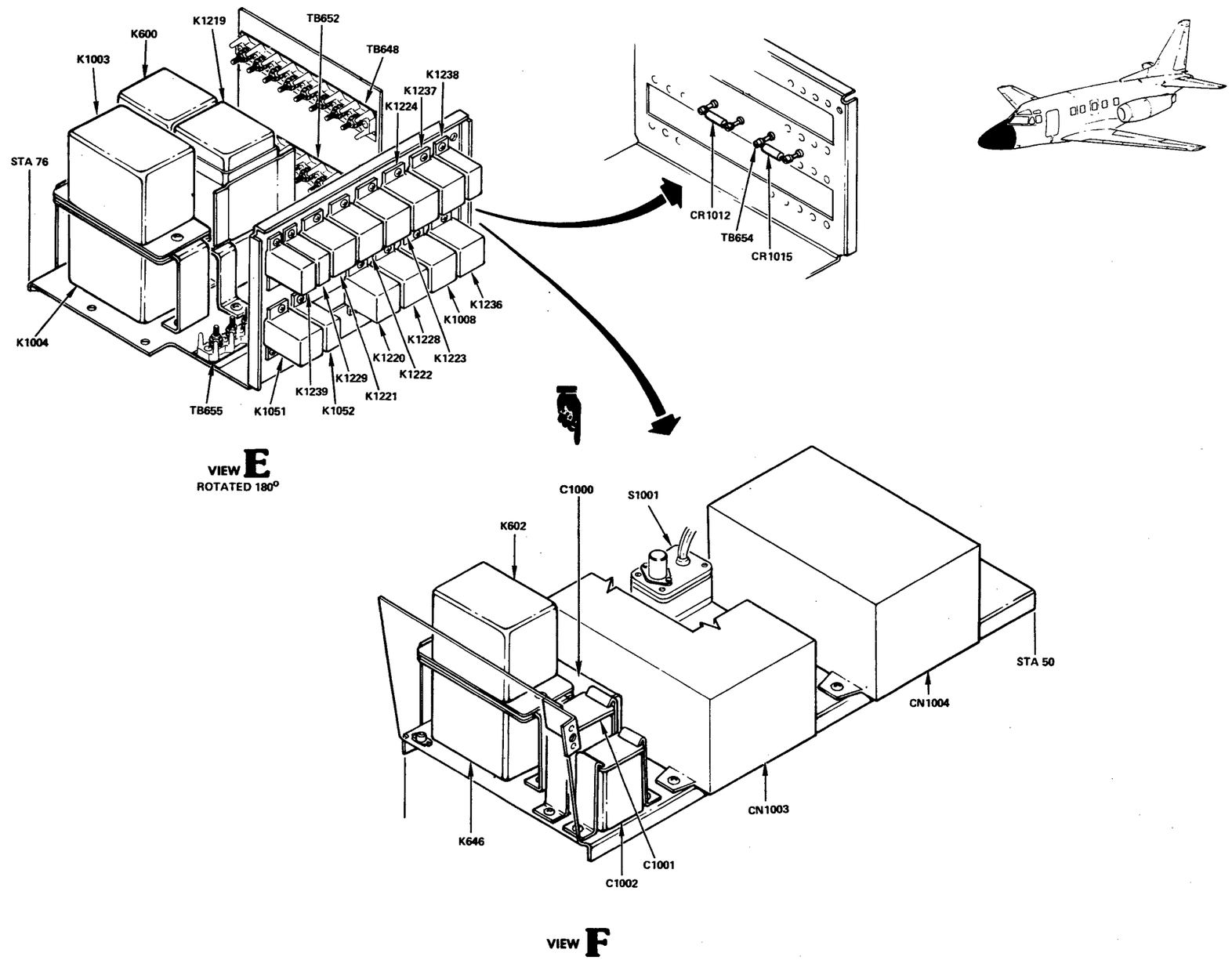

Figure 1 — Component Location Diagram (Sheet 2 of 10)

© COPYRIGHT, 1989 BY SABRELINER CORPORATION

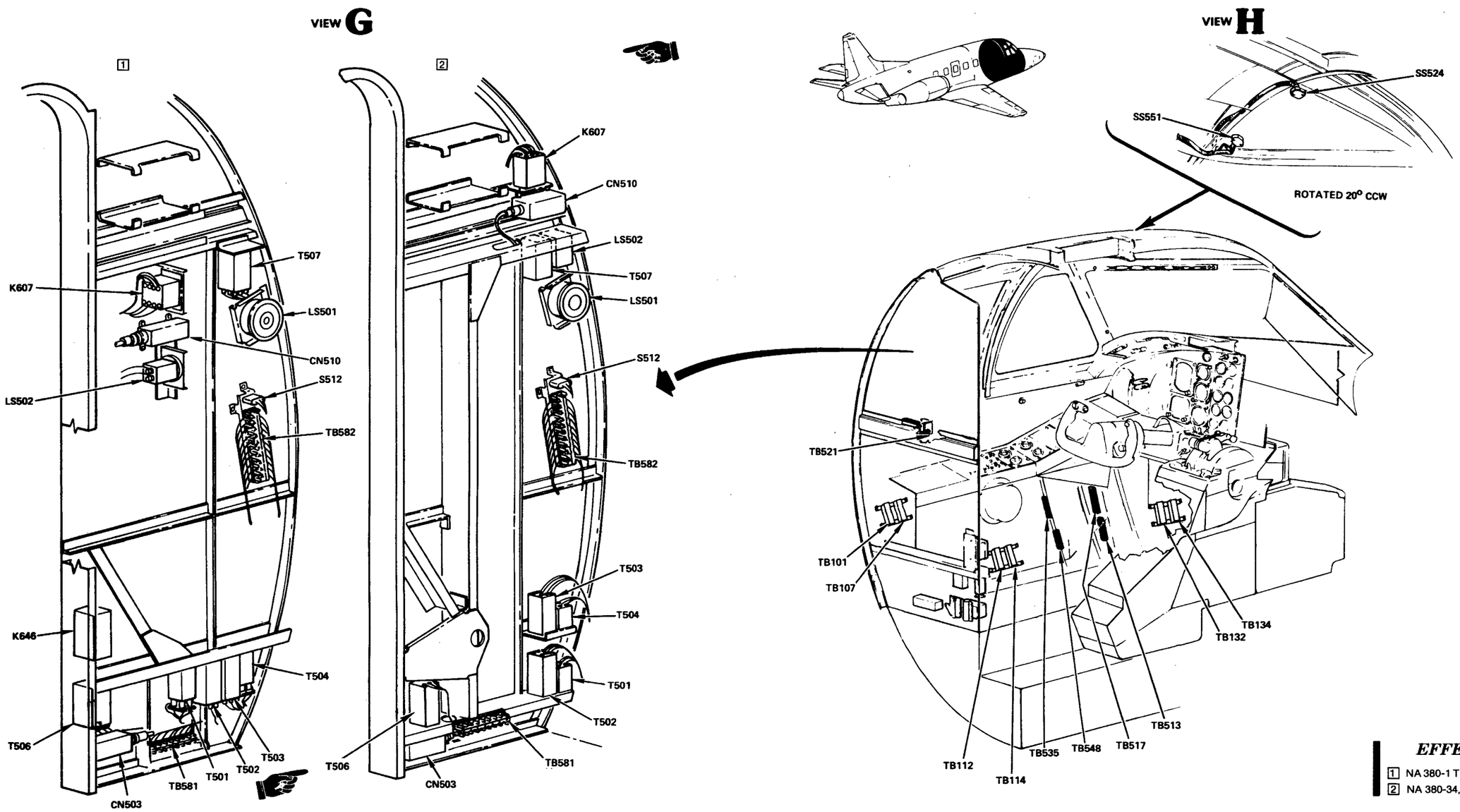

Figure 1 — Component Location Diagram (Sheet 3 of 10)

EFFECTIVITY

1 NA 380-1 THRU -33, -35 AND -37
2 NA 380-34, -36, -38 AND SUBS

COMPONENT LOCATION

© COPYRIGHT, 1989 BY SABRELINER CORPORATION

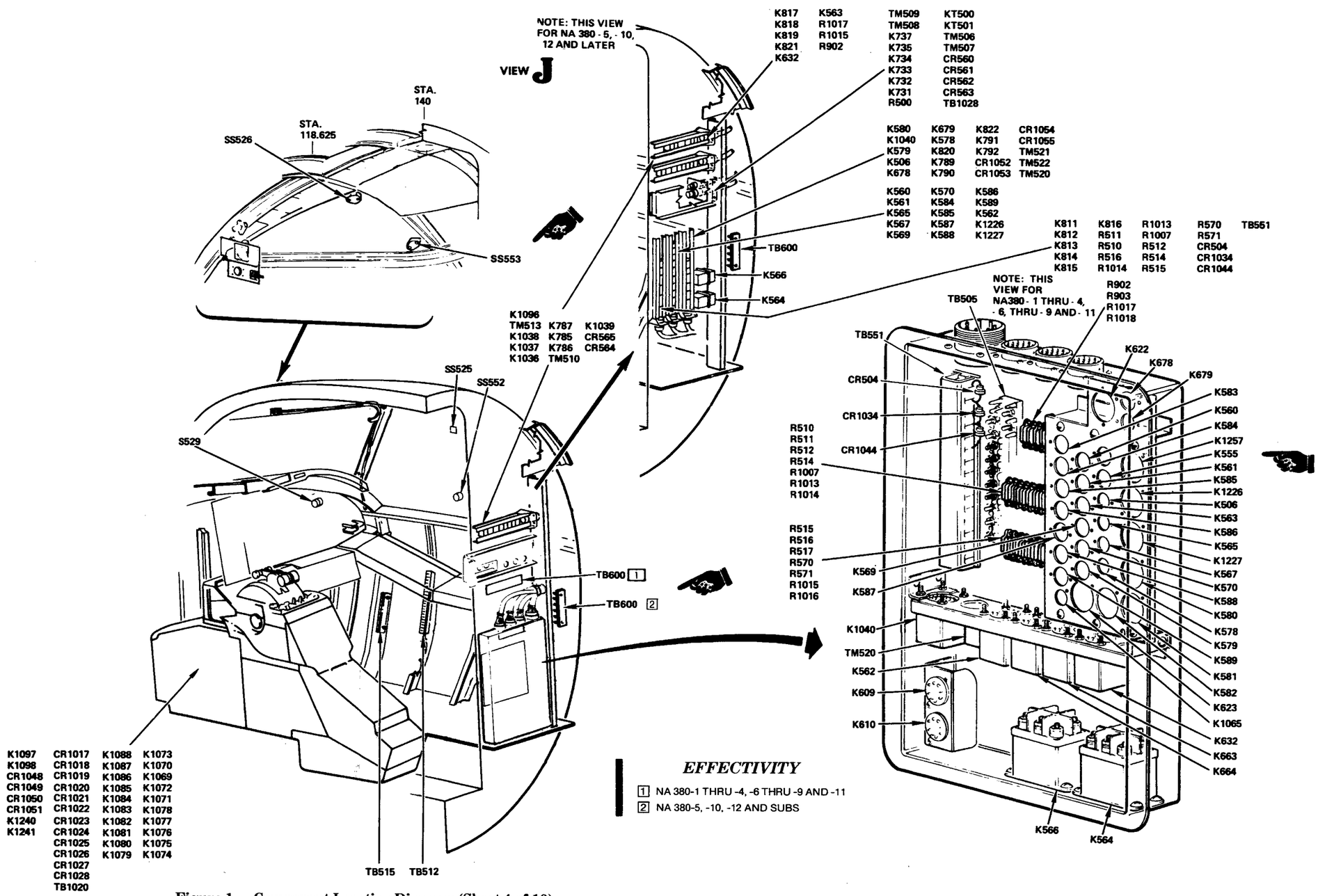

Figure 1 — Component Location Diagram (Sheet 4 of 10)

COMPONENT LOCATION

© COPYRIGHT, 1989 BY SABRELINER CORPORATION

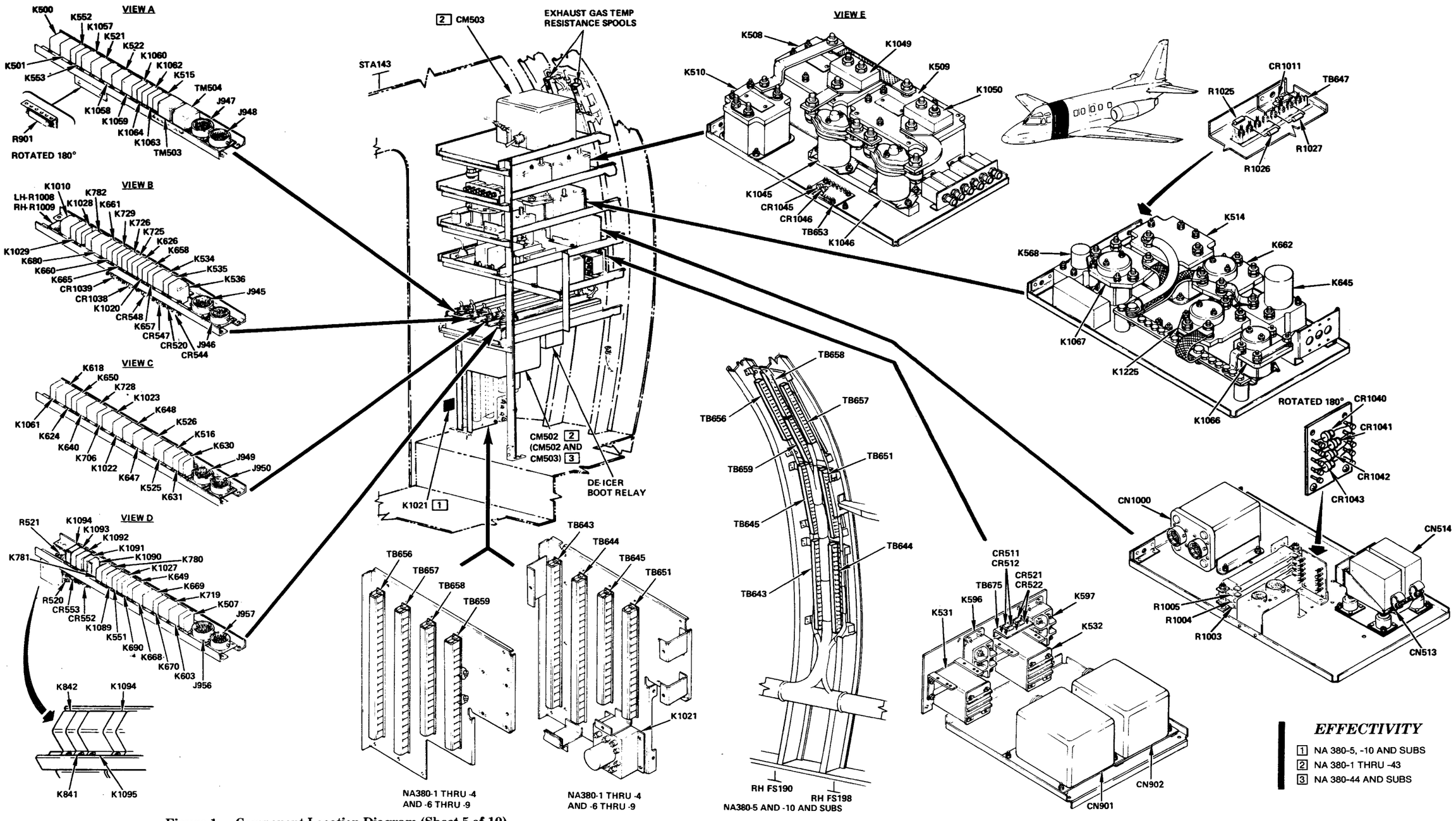

Figure 1 — Component Location Diagram (Sheet 5 of 10)

COMPONENT LOCATION

© COPYRIGHT, 1989 BY SABRELINER CORPORATION

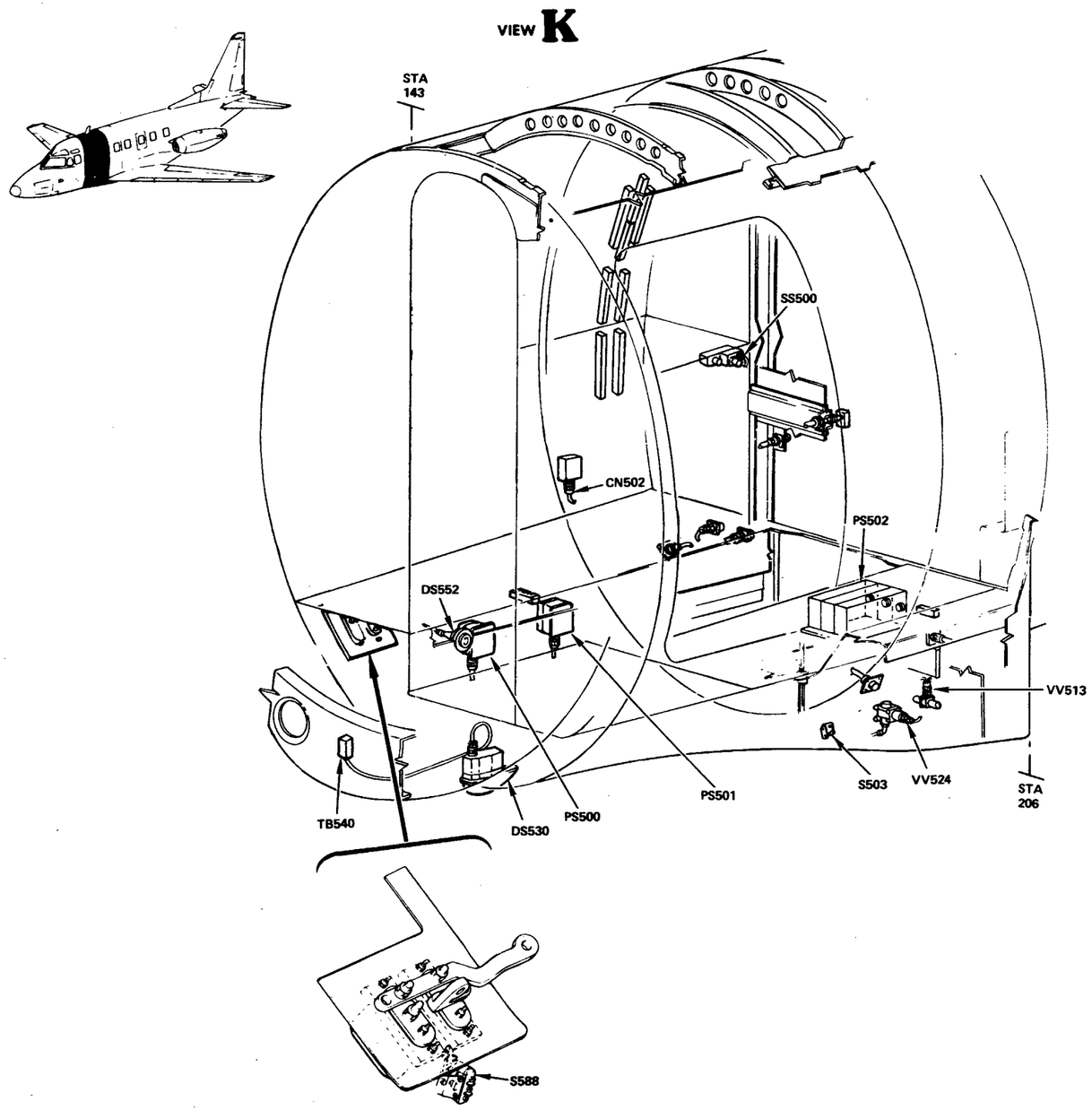

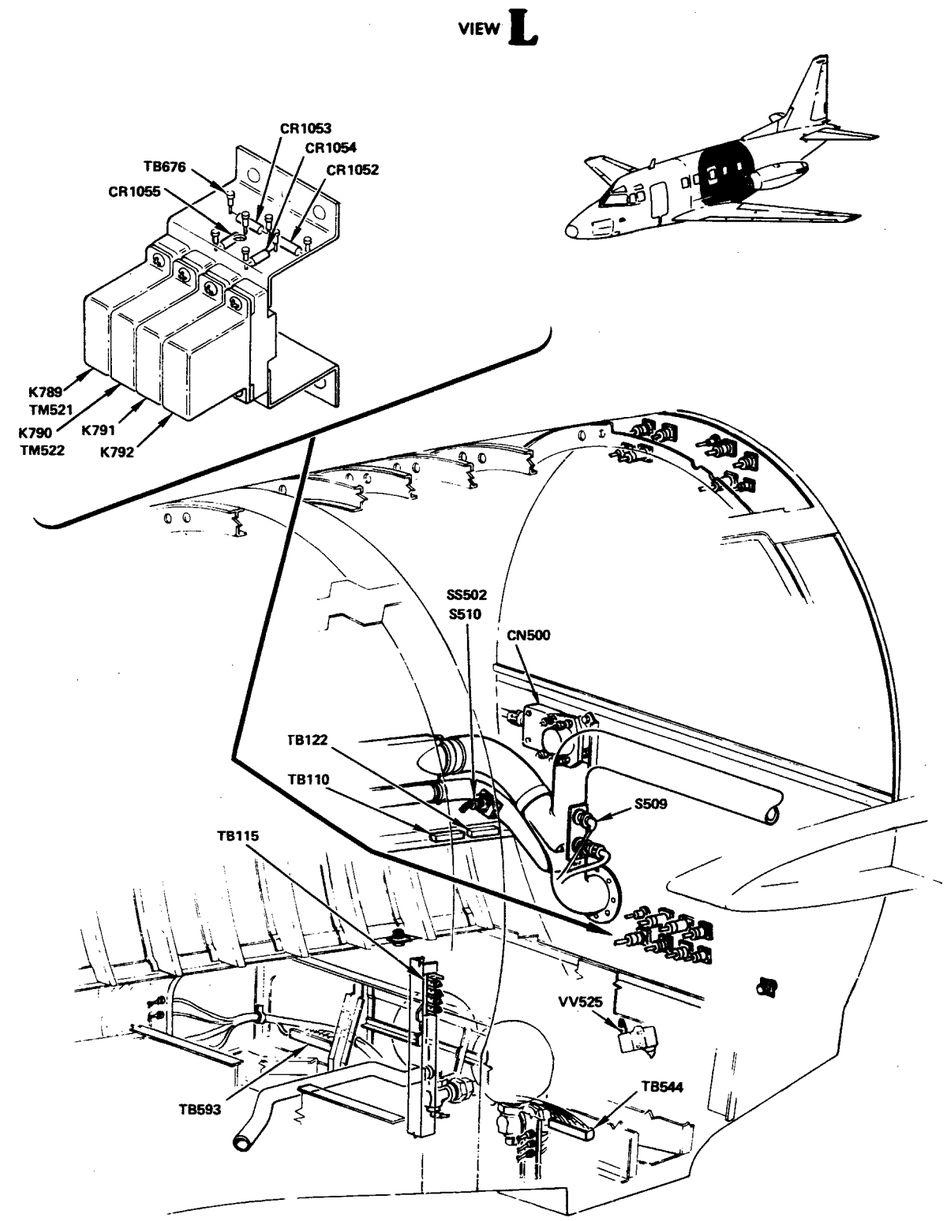

Figure 1 — Component Location Diagram (Sheet 6 of 10)

© COPYRIGHT, 1989 BY SABRELINER CORPORATION

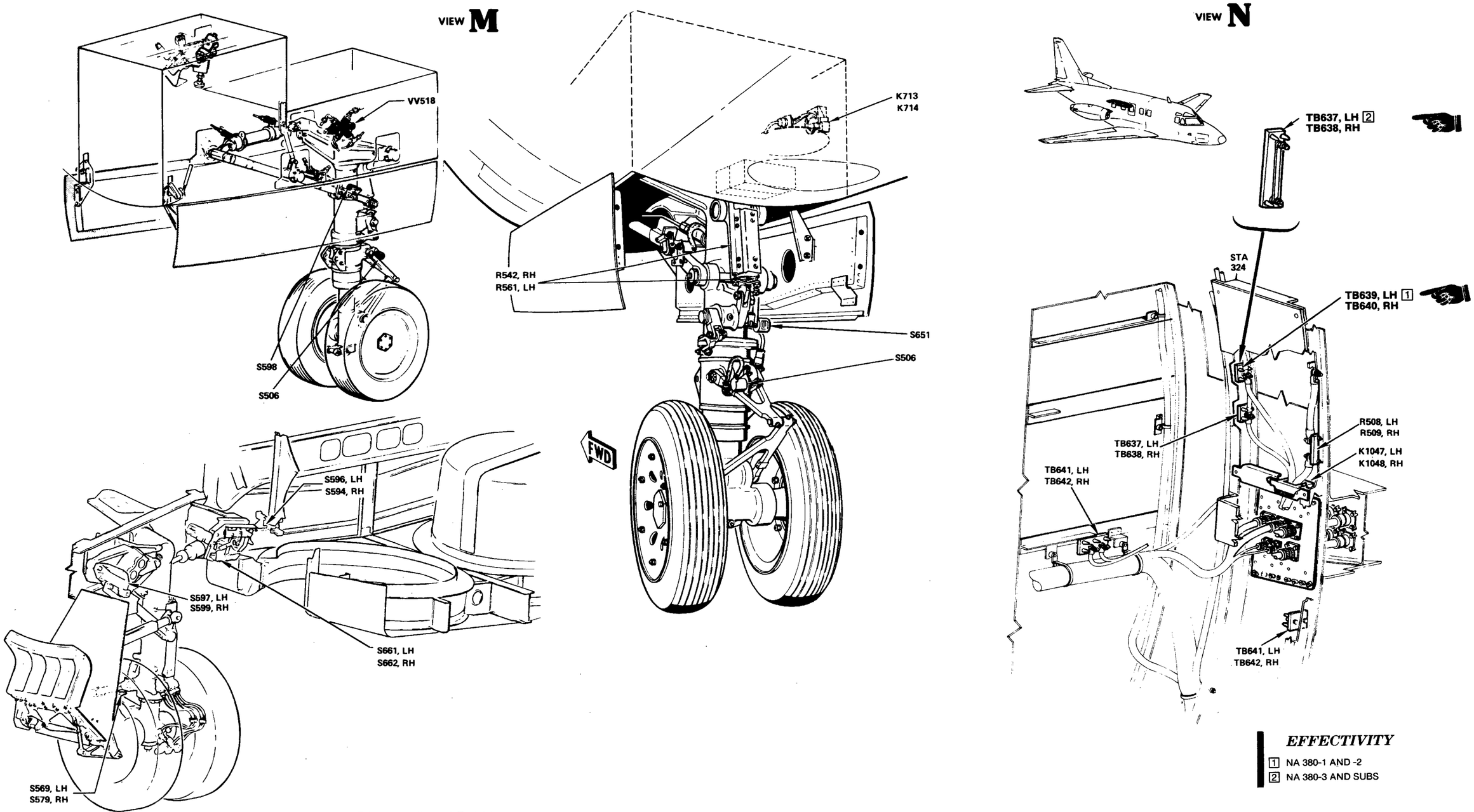

EFFECTIVITY

1 NA 380-1 AND -2
2 NA 380-3 AND SUBS

Figure 1 — Component Location Diagram (Sheet 7 of 10)

COMPONENT LOCATION

© COPYRIGHT, 1989 BY SABRELINER CORPORATION

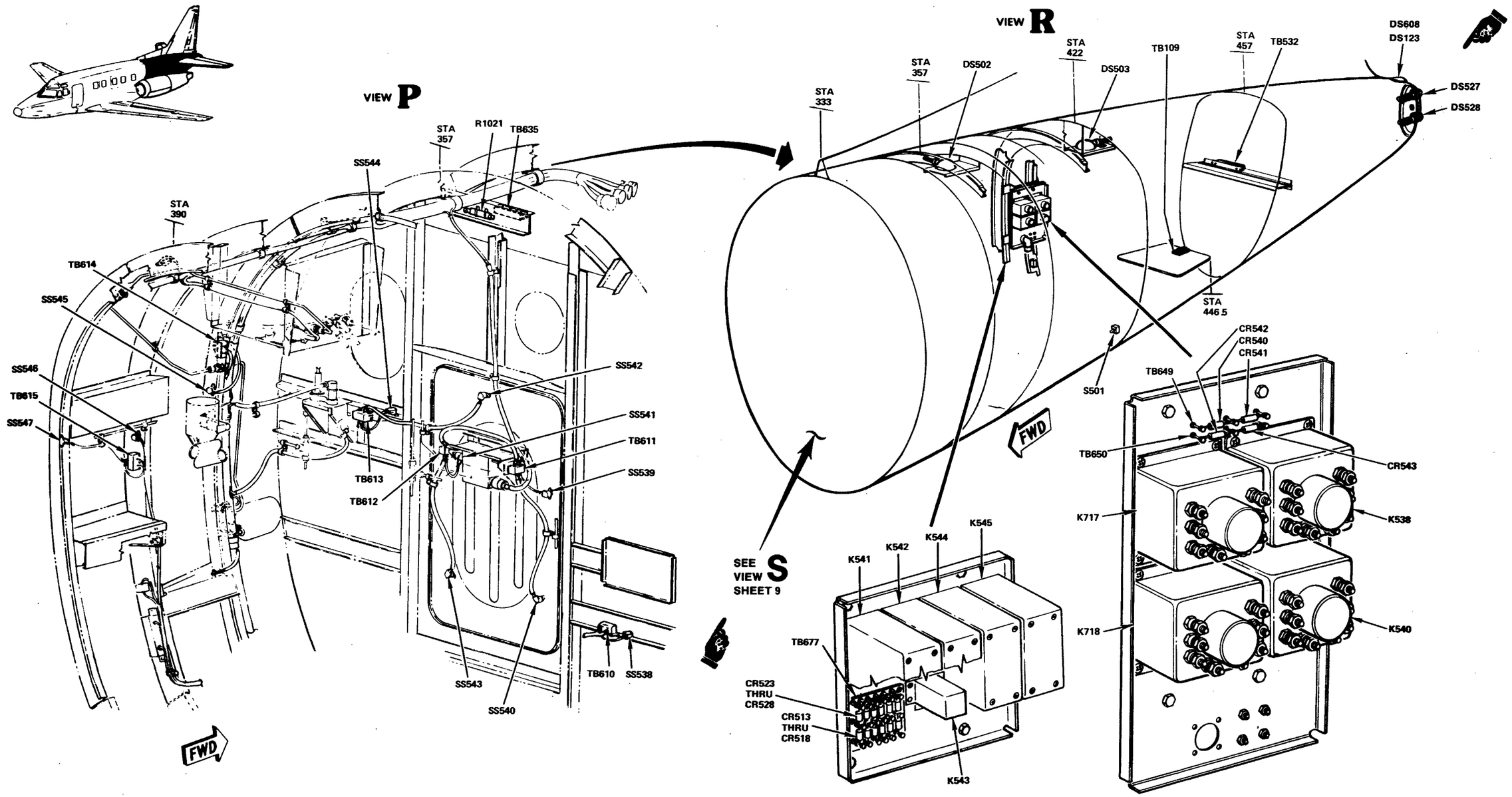

Figure 1 — Component Location Diagram (Sheet 8 of 10)

COMPONENT LOCATION

© COPYRIGHT, 1989 BY SABRELINER CORPORATION

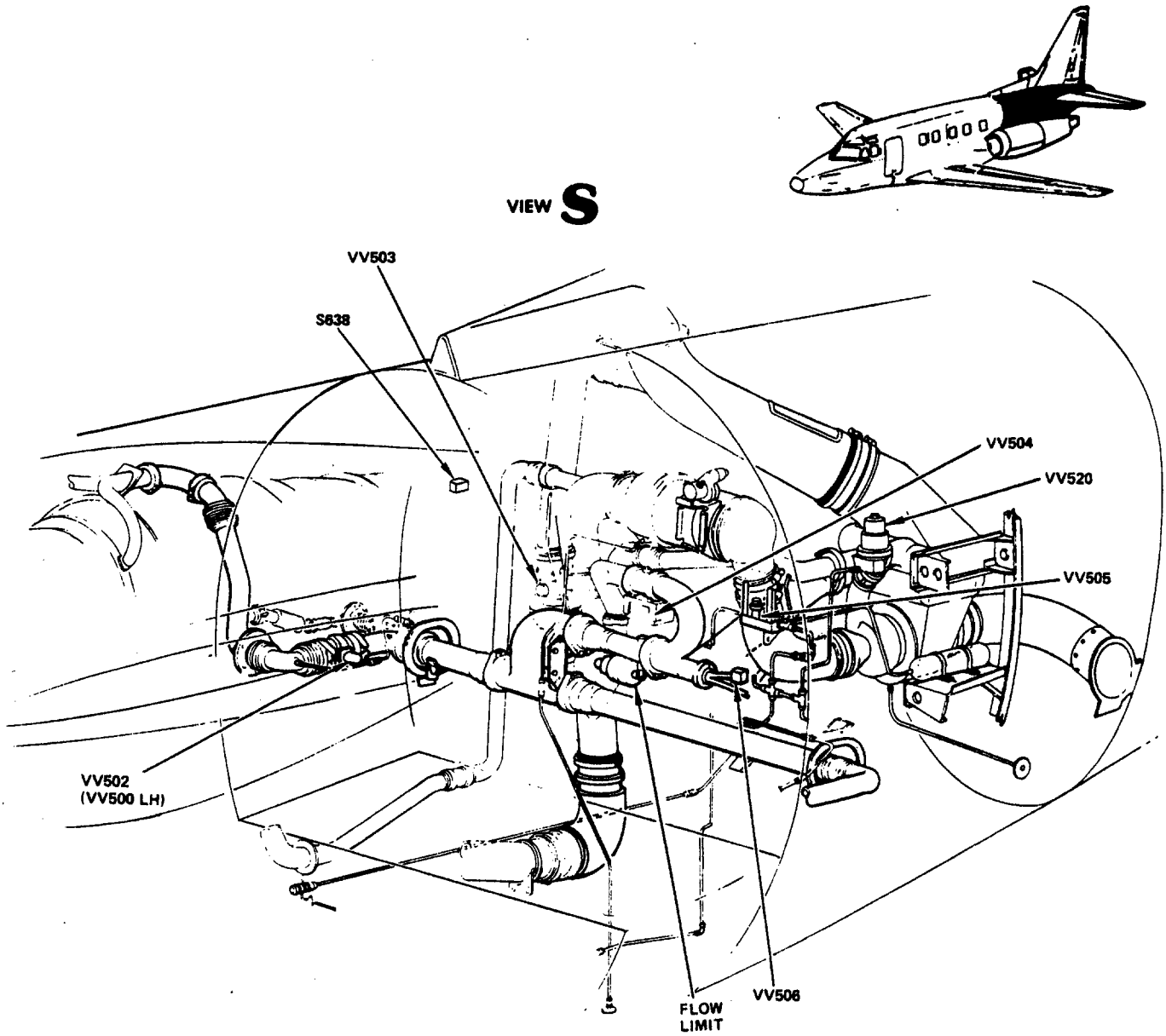

Figure 1 — Component Location Diagram (Sheet 9 of 10)

© COPYRIGHT, 1989 BY SABRELINER CORPORATION

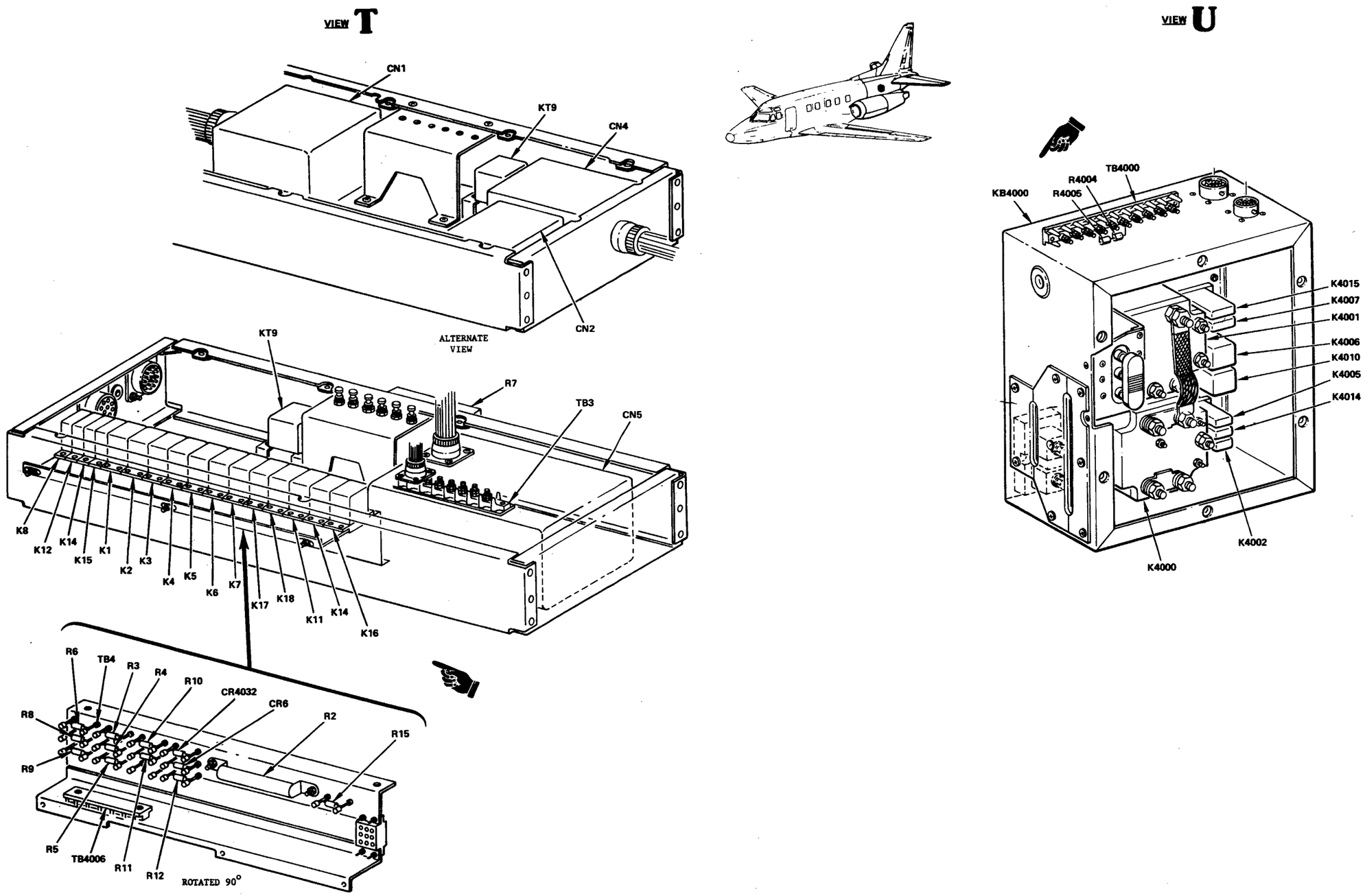

Figure 1 — Component Location Diagram (Sheet 10 of 10)

COMPONENT LOCATION

© COPYRIGHT, 1989 BY SABRELINER CORPORATION

WIRING DIAGRAM INDEX

TITLE	AIRPLANE APPLICABILITY	CHAPTER/ SECTION	PAGE
AC Instrument and Indirect Lighting System	ALL	24-50-4	2
AC Inverter System	ALL Except FAA Airplanes	24-20-1	2
AC Inverter System — Solid State Inverter	S/N 380-4, -6, -8, -9 & -11	24-20-2	2
AC Power Distribution System	ALL Except FAA Airplanes	24-50-3	1
Aft Fuselage Compartment Lighting System	ALL	33-30-1	1
Aft Fuselage Overheat Indicating System	ALL	21-60-1	1
Anti-Collision Lights System	ALL	33-40-3	1
Audio System Provisions	ALL Except FAA Airplanes	23-00-1	1
Auxiliary Power Unit System	S/N 380-5, -10, -12 & Subs	49-00-1	1
Auxiliary Power Unit System	S/N 380-1 thru -4, -6 thru-9 &-11	49-00-1	20
Avionics Antenna Provisions	S/N 380-41 & Subs	23-00-2	1
Baggage Compartment Lighting System	ALL	33-20-3	1
Battery Temperature Indicating and Control	ALL Except FAA Airplanes	24-30-7	2
Cabin Entrance and Passenger Reading Lighting (Provisions)	ALL	33-20-1	1
Cabin Pressure and Temperature Control and Warning	ALL	21-30-1	2
Cockpit and Cabin Temperature Control and Warning	ALL	21-30-1	6
Cabin Pressure, Warning Signs, Oxygen Flow and Oxygen Pressure Systems	S/N 380-1 thru -4, -6 thru -9, & -11	21-30-4	2
	S/N 380-5, -10, -12 & Subs	21-30-4	6
Caution Warning and Indicator Lights Dim and Test System	S/N 380-1 thru -4, -6 thru -9 & -11	33-10-1	2
	S/N 380-5, -10, -12 & Subs	33-10-1	6
Cockpit Dome, Map and Utility Lighting Systems	ALL	33-10-3	1
Console Indirect Lighting System	ALL	33-10-5	1
Control Wheel and Column	ALL	27-00-4	1
Cooling Package (3 wheel turbine)	ALL	21-50-1	1
Copilot's Turn-and-Slip Indicator	ALL	34-20-1	1
Cross Feed System — Fuel	S/N 380-1 thru -4 -6 thru -9 & -11	28-20-1	2
	S/N 380-5, -10, -12 & Subs	28-20-1	6

© COPYRIGHT, 1987 BY SABRELINER CORPORATION

WIRING DIAGRAM INDEX (Continued)

TITLE	AIRPLANE APPLICABILITY	CHAPTER/ SECTION	PAGE
DC Bus Tie-in System	S/N 380-1 & Subs With SOK 17	24-50-1	7
	S/N 380-1 & Subs Without SOK 17	24-50-1	1
DC Generator System	S/N 380-1 thru -4, -6 thru -9 & -11	24-30-1	2
	S/N 380-5, -10, -12 & Subs	24-30-1	6
	S/N 380-1 & Subs	24-30-1	9
DC Power Distribution System	ALL Except FAA Airplanes	24-50-2	2
Door Seal and Lock Indicator System	ALL	21-30-2	1
Electrical Ground System	S/N 380-1 thru -4, -6 thru -9 & -11	24-50-5	2
	S/N 380-5, -10, -12 & Subs	24-50-5	6
Emergency Lighting System	ALL	33-50-1	1
Engine Fire Detector System	ALL	26-10-1	2
Engine Fire Extinguisher System	ALL	26-20-1	2
Engine Ignition System	ALL	74-10-1	2
Engine Anti-ice System	ALL	75-10-1	2
Engine Oil Low Pressure Warning	ALL	77-00-1	1
Engine Oil Pressure Indicator	ALL	77-20-1	1
Engine Pressure Ratio System	ALL	77-10-3	2
Engine Pylon-Firewall Disconnects, LH	ALL	71-00-1	1
Engine Pylon-Firewall Disconnects, RH	ALL	71-00-1	3
Engine Flood Light System	ALL	33-10-4	2
Engine, Radio, and Instrument Indirect Light System	ALL	33-10-2	2
Engine Start System	S/N 380-1 & Subs not Changed by SOK 17	80-20-1	2
	S/N 380-1 & Subs Changed by SOK 17		6
Engine Thrust Reverser Control System (LH)	S/N 380-1 & Subs not Changed by SOK 28	78-30-1	2
Engine Thrust Reverser Control System (RH)	S/N 380-1 & Subs not Changed by SOK 28	78-30-1	6
Engine Thrust Reverser Control System (LH)	S/N 380-5, -10, -12 & Subs Changed by SOK 28	78-30-1	10
Engine Thrust Reverser Control System (RH)	S/N 380-5, -10, -12 & Subs Changed by SOK 28	78-30-1	14
Equipment Ground Cooling Blower and Pressure Fail System	ALL	21-30-3	1
Exhaust Temperature Indicating System	ALL	77-10-2	1

© COPYRIGHT, 1987 BY SABRELINER CORPORATION

WIRING DIAGRAM INDEX (Continued)

TITLE	AIRPLANE APPLICABILITY	CHAPTER/ SECTION	PAGE
Fan Speed Indicating System	ALL	77-10-1	1
Flap Control and Position Indicating System	ALL	27-00-2	2
Flap Position Indicating System	ALL	27-00-2	2
Flight Control Trim System	S/N 380-1 thru -43 without S/B 75-22	27-00-3	2
	S/N 380-44 & Subs & 380-1 thru -43 with S/B 75-22	27-00-3	11
Floodlight System	ALL	33-10-4	2
Foot Heaters System	ALL	21-20-1	1
Free Air Temperature Indicating System	ALL	34-10-1	1
Fuel and Oil Temperature Indicating System	ALL	77-20-2	2
Fuel Boost System	S/N 380-1 thru -4, -6 thru -9 & -11	28-20-2	2
	S/N 380-5, -10, -12 & Subs	28-20-2	6
Fuel Boost Warning System	ALL	28-40-1	2
Fuel Cross Feed System	S/N 380-1 thru -4, -6 thru -9 & -11	28-20-1	2
	S/N 380-5, -10, -12 & Subs	28-20-1	6
Fuel Drain Recovery System	ALL	28-10-1	2
	S/N 380-1 thru -35, -37 & -38 Changed by SOK 6	28-10-1	2
Fuel Filter Warning System	ALL	28-20-4	1
Fuel Flow Indicating System	ALL Except FAA Airplanes	28-40-2	2
Fuel Quantity Indicating System	ALL	28-40-3	2
Fuel Shutoff System	S/N 380-1 thru -4 -6 thru -9 & -11	28-20-3	2
	S/N 380-5, -10, -12 & Subs	28-20-3	6
High Intensity Lights	S/N 380-1 & Subs & A/C Changed by S/B 13	33-40-5	1
Hour Meter	ALL	31-00-2	1
Hydraulic Pressure Indicating System	ALL	29-30-1	1
Hydraulic Pump System	S/N 380-1 thru -4, -6 thru -9 & -11 not Changed by SOK 25	29-10-1	2
	S/N 380-5, -10, -12 & Subs Not Changed by SOK 25	29-10-1	8
	S/N 380-5, -10, -12 & Subs Changed by SOK 25	29-10-1	14
	S/N 380-1 thru -4, -6 thru -9 & -11 Changed by SOK 25	29-10-1	20

© COPYRIGHT, 1987 BY SABRELINER CORPORATION

WIRING DIAGRAM INDEX (Continued)

TITLE	AIRPLANE APPLICABILITY	CHAPTER/ SECTION	PAGE
Ice Check Light System	ALL	33-40-4	1
Indirect Light System	ALL	33-10-6	2
Instrument Floodlight System	ALL	33-10-4	2
Instrument Indirect Lights	ALL	33-10-2	2
Instrument Panel Vibrators	ALL	31-00-1	1
Landing and Taxi Light System	S/N 380-1 thru -29 Except FAA Airplanes	33-40-2	2
	S/N 380-5, -10, -14, -16, -18, -20, -22, -24, -26, -28, -29, -30 & Subs	33-40-2	6
Landing Gear Control System	ALL	32-00-1	2
Landing Gear Position Indicating and Warning System	S/N 380-1 thru -4, -6 thru -9 & -11	32-60-1	2
	S/N 380-5, -10, -12 & Subs	32-60-1	6
Lock Indicating System — Door	ALL	21-30-2	1
Mach Airspeed Warning System	ALL	34-10-2	1
Magnetic Compass Provisions	ALL	34-00-1	1
Map Light System	ALL	33-10-3	1
Modulating Antiskid Control System	S/N 380-1 thru -4, -6 thru -9 & -11	32-10-1	2
	S/N 380-5, -10, -12 & Subs	32-10-1	8
Nose Gear Steering System	S/N 380-1 thru -27 Except FAA Airplanes	32-50-1	2
	S/N 380-1 thru -27 Changed by S/B 85-2 Except FAA Airplanes	32-50-1	10A
	S/N 380-30 & Subs & FAA Airplanes	32-50-1	12
	S/N 380-30 & Subs & FAA Airplanes Changed by S/B 85-2	32-50-1	22
Nose Ground Cooling Blower and Pressure Failure System	ALL	21-30-3	1
Oil Pressure Indicator	ALL	77-20-1	1
Oil Pressure Low Warning System	ALL	77-00-1	1
Oil Temperature Indicating System	ALL	77-20-2	2
Oxygen Pressure Indicating System	ALL	21-30-4	2
Passenger Compartment Signs	ALL	21-30-4	2
Passenger Oxygen Flow Lights System	ALL	21-30-4	2
Passengers' Dome, Coat and Baggage Compartment Lighting Systems	ALL	33-20-3	1
Passengers' Reading Lights Systems (Provisions)	ALL	33-20-1	1

© COPYRIGHT, 1987 BY SABRELINER CORPORATION

WIRING DIAGRAM INDEX (Continued)

TITLE	AIRPLANE APPLICABILITY	CHAPTER/ SECTION	PAGE
Pedestal Floodlights System	ALL	33-10-4	2
Pilot' and Co-pilot's Turn-and -Slip Indicators	ALL	34-20-1	1
Pilot's Compartment Dome Light System	ALL	33-10-3	1
Pitot Heat System	ALL	30-30-1	2
Pneumatic Boot System	Airplanes Changed by S/B 73-20	30-10-1	2
Position and Anti-collision Light System	ALL	33-40-3	1
Radio Floodlight System	ALL	33-10-4	2
Radio Indirect Light System	ALL	33-10-2	2
Ram Air Inlets Anti-ice System	ALL	30-20-1	2
RPM Speed Indicator	ALL	77-10-1	1
Speed Brake System	ALL	27-60-1	2
Stall Warning System	ALL	34-10-3	2
Standby Compass, Pedestal, Overhead and LH Outboard Instrument Panel Indirect Light System	ALL	33-10-6	2
Tachometer System (Engine and Fan RPM)	ALL	77-10-1	1
Taxi Light System	ALL	33-40-2	2
Three-Wheel Cooling Package	ALL	21-50-1	1
Thrust Reverser Indicating System	S/N 380-1 & Subs Not Changed by SOK 28	78-30-2	2
	S/N 380-5, -10, -12 & Subs Changed by SOK 28	78-30-2	6
Thunderstorm Light System	ALL	33-40-1	1
Trim Disconnect System	S/N 380-1 & Subs Mod Per S/B 74-6	27-40-1	2
Trim Position Indicating System	ALL	27-00-1	1
Turn-and-Slip Indicators (Pilot's and Co-pilot's)	ALL	34-20-1	1
Utility Light System	ALL	33-10-3	1
Vacuum Pump System	ALL	21-30-5	2
Windshield and Side Window Anti-ice Control System	ALL	30-40-1	1
Windshield Anti-ice Power System	ALL Except FAA Airplanes	30-40-1	4
Windshield Wiper System	ALL	30-40-2	1

© COPYRIGHT, 1987 BY SABRELINER CORPORATION

CHAPTER

20

STANDARD PRACTICES (AIRFRAME)

CHAPTER 20

STANDARD ELECTRICAL PRACTICES

TABLE OF CONTENTS

Subject	Page
Description	1
General	1
Bonding	1
Wiring Stripping	2
Wire Lugging	2
Ferrules	8
Crimped Contacts for KPTM and CA-RX Connectors	9
Pressure Feedthrough (Gland) Seal	12

© COPYRIGHT, 1987 BY SABRELINER CORPORATION

STANDARD ELECTRICAL PRACTICES - DESCRIPTION

1. General

The purpose of this chapter is to acquaint maintenance personnel with the standard electrical practices used when performing maintenance on the various electrical items installed in the aircraft. No attempt is made to cover all electrical maintenance practices; therefore, only the more common items are covered.

2. Bonding

A. Observe the following precautions when installing bonding jumpers:

(1) Bonding connections should be made so that vibration, expansion, contraction, or normal movement of parts will not loosen or break the connection.

(2) As far as possible, install bonding jumpers in protected areas and in places where they can be reached for inspection and replacement.

(3) Install bonding jumpers so that they do not interfere with movable parts.

(4) Bonding clamps installed on flexible metallic conduit or on hose should not crimp or damage the conduit or hose.

(5) When bonding jumpers or clamps are replaced, the jumper or clamp and the washers, nuts, or screws to be installed should be of the same material as those removed. The material in the original installation was selected to minimize the corrosion that results from joining dissimilar metals, or if corrosion could not be prevented, to make sure that replaceable items (not the airplane structure) would corrode.

(6) Ensure that attaching points for bonding are clean (paint removed). Refinish area after attaching bonding.

(7) Control surfaces and flaps should have a bonding jumper across each hinge. There should not be less than two jumpers; however, only one bond jumper need be installed across the hinge on the aileron and rudder trim tab. "Piano" type hinges are considered one hinge.

© COPYRIGHT, 1981 BY ROCKWELL INTERNATIONAL

3. Wire Stripping

A. Wire stripping is done on all wire sizes between No. 22 and No. 10 with approved wire strippers (figure 20-00-1) or other means. The following precautions held prevent nicking wire stands:

(1) Accurately measure length of wire to be stripped by lug used.

(2) Be certain proper slot is used for wire size being stripped.

(3) While stripping wire, hold wire exactly perpendicular to cutting blades.

NOTE: If strippers nick strands or fail to remove all insulation from wire, they are out of adjustment.

(4) When stripping No. 8 and larger wire, use a sharp pocket knife and observe the following procedure:

(a) Very carefully ring-cut outside insulation. Make sure knife does not cut into any strands.

(b) Make next cut parallel to strands, deep enough to penetrate all insulation.

(c) Peel insulation from around wire. Trim off loose fabric or rubber.

4. Wire Lugging

A. General

An MS25037 handtool may be used although it is recommended that the terminal and handtool from the same manufacture be used for proper indentation. (See figure 20-00-1.)

B. Wire Lugging Precautions

(1) Install copper terminals only on copper wire, and aluminum terminals only on aluminum wire.

(2) Insert wire strands in an open-end terminal so that end of wire is flush with lug end of terminal barrel. Wire strands should never extend past the end of the terminal barrel far enough to interfere with the installation of the correct size washer.

© COPYRIGHT, 1981 BY ROCKWELL INTERNATIONAL

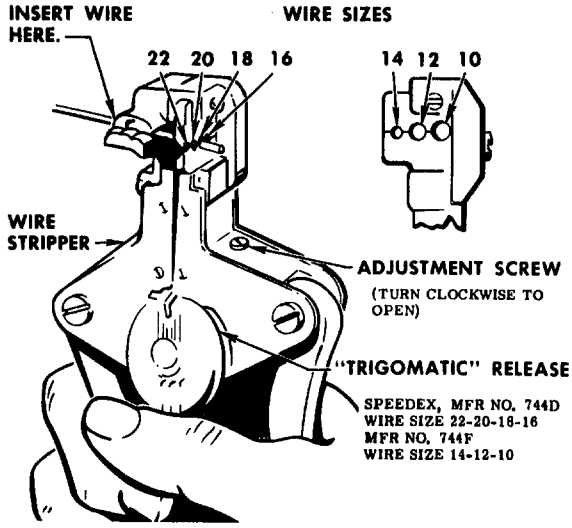

AIRCRAFT-MARINE PRODUCTS TERMINALS AND HAND TOOLS

TERMINAL	MFR TERMINAL NUMBER	SCREW SIZE	TERMINALS MS25036	WIRE SIZE RANGE	MFR HAND TOOL NUMBER	COLOR CODE	
						TERMINAL	TOOL HANDLE
RING-TONGUE	31882	6	-2	22-20-18	48393 OR 49556 OR 49863	RED	RED
	31888	8					
	31889	10	-3				
	31892	1/4					
	31893	5/16	-4				
	32439	4		16-14	48394 OR 49557 OR 49864	BLUE	BLUE
	32441	4					
	32440	6	-6				
	32442	6	-6				
	31898	6	-7				
	31901	6	-7				
	31899	8					
	31902	8					
	31900	10	-8				
	31903	10	-8				
	31906	1/4					
	31904	1/4					
	31907	5/16	-9				
PRE-INSULATED	31905	5/16	-9				
	32542	6	-11	12-10	59113 OR 59062	YELLOW	YELLOW
	32543	8					
	32544	10	-12				
	32545	1/4					
	32546	5/16	-13				

NOTE MS25037 hand tool may be used, although it is recommended that the terminal and hand tool from the same manufacturer be used for proper indentation.

5370-2-54-49

Wire Strippers and Terminals
Figure 20-00-1

© COPYRIGHT, 1981 BY ROCKWELL INTERNATIONAL

(3) Make sure wire installed in permanent splices is visible in window of splice or is at least flush with inner end of terminal barrel. Wire strands should never extend more than half the length of the window past the barrel. Insulation on the wire should always enter the insulating sleeve of the splice. Cover a permanent splice with approved insulating sleeving and firmly spot-tie sleeving at each end.

(4) Use performed terminals when bent lugs are needed. If preformed terminals are not available, copper terminals for wire sizes No. 22 through No. 10 may be bent a maximum of 90 degrees, once, if bent carefully, Larger copper terminals may be bent 30 degrees. Bend flag terminals so that barrel tends to close and no stress is placed on brazed joint.

(5) Do not damage or distort a terminal barrel in indenting or crimping operation. Whenever possible, indent top of barrel. This makes inspection easier after terminals are installed on a terminal strip. The indenture or indentures should always be in the center of the terminal barrel.

(6) When terminal manufacturer's tools are used for lugging, use correct color-coded tool. Install red color-coded terminals with red color-coded tools, blue with blue, and yellow with yellow.

C. Lugging AMP Terminals

Preinsulated color-coded, insulated-grip terminals made by AMP, Inc (Harrisburg, Pa.) are used exclusively on wire sizes No. 22 through No. 10. AMP lugging tools must be used with these terminals. (See figure 20-00-2.)

(1) Select hand lugging tool according to color coding. The color on the handtool must match the color on the terminal.

(2) Place adjustment pins (or rivets) on lugging tool in No. 2 position.

(3) Check ratchet operation of handtool. The ratchet should release only when the tool handles are completely closed.

(4) Strip insulation from wire two-thirds of length of barrel used.

(5) Insert wire in barrel until insulation is butted firmly against internal shoulder.

© COPYRIGHT, 1981 BY ROCKWELL INTERNATIONAL

(6) Check that strands are flush with end of barrel, but do not interfere with terminal mounting washer.

(7) Insert terminal in jaws of handtool so that indent will be in center on top and bottom of terminal barrel. Close tool handles until ratchet releases to complete the crimp.

D. Lugging AMP Permanent Splices

(1) After selecting proper size connector by its color code, select a piece of approved tubing of correct diameter and long enough to extend 1/2 inch beyond each end of splice, and slide it into wire; then strip each wire to be spliced exactly two-thirds of length of one connector barrel.

(2) Insert connector in jaws of correspondingly colored handtool (with stop removed). Before crimping, check carefully for these six conditions:

(a) Handtool adjustment pins must be in No. 2 position.

(b) Wire insertion end of connector barrel must be under adjustment pin side of head of tool.

(c) Entire splice barrel must be under jaws of tool, with no part protruding from either side tool head.

(d) Crimp must be made exactly on top and bottom of barrel, not cocked or on the side.

(e) After wire in one half of splice is crimped, tool must be turned 180 degrees to properly crimp second half of connector.

(f) Slip approved tubing over splice, and spot-tie in position.

E. Lugging AMP Knife Disconnects

When lugging knife disconnects, observe the following precautions:

(1) Use AMP lugging tool, or equivalent. (See figure 20-00-1.)

(2) Select hand lugging tool according to color coding. The color on the handtool must match the color on the knife disconnect.

(3) Place adjustment pins on hand lugging tool in No. 2 position.

© COPYRIGHT, 1981 BY ROCKWELL INTERNATIONAL

(4) Check ratchet operation of handtool. The ratchet should release only when the tool handles are completely closed.

(5) Strip insulation from both wires, two-thirds of length of terminal barrel of knife disconnect.

(6) Cut approved tubing long enough to extend 1/2 inch beyond each end of of knife disconnect assemblies.

(7) Slide tubing onto one of the two wires.

(8) Insert one stripped wire into barrel of one knife disconnect until insulation is butted firmly against internal shoulder of knife disconnect barrel.

(9) Position knife disconnect in jaws of hand lugging tool so that indent will be in center, and on top and bottom, of knife disconnect barrel.

(10) Close lugging tool handles until ratchet releases at completion of indent operation.

(11) Remove knife disconnect from handtool.

(12) Repeat steps (8) through (11) for remaining wire.

(13) Slide approved tubing over knife disconnect assembly, and spot-tie tubing at both ends.

F. Lugging Burndy Insulated Terminals

When lugging Burndy copper insulated terminals sizes 8 to 4/0, the Burndy Hytool must be used. (See figure 20-00-2.) To install insulated terminals, the following procedure should be used:

NOTE: Before selecting proper terminal, carefully check any wire between sizes 8 and 4/0 to determine whether it is aluminum or copper. Look straight toward cut end of wire. If there is a copper tint of color, it is copper wire; if no color is present, it is aluminum wire.

(1) Strip insulation from copper wire exact length of terminal barrel.

(2) Insert strands so that they are visible through inspection hole and so that insulation of wire slides inside nylon on lugs and butts firmly against end of copper barrel.

© COPYRIGHT, 1981 BY ROCKWELL INTERNATIONAL

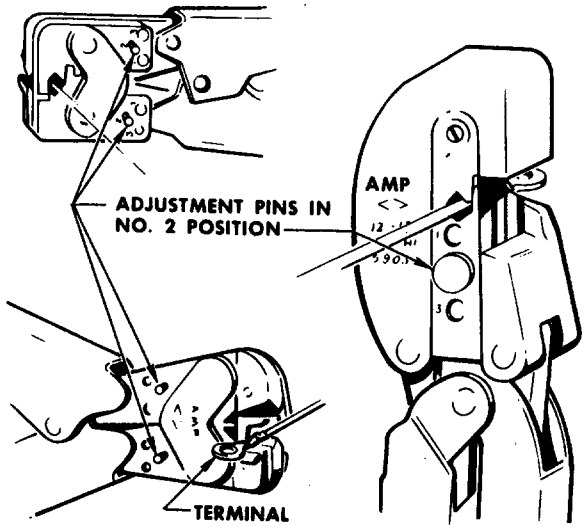

LUGGING "AMP" TERMINALS

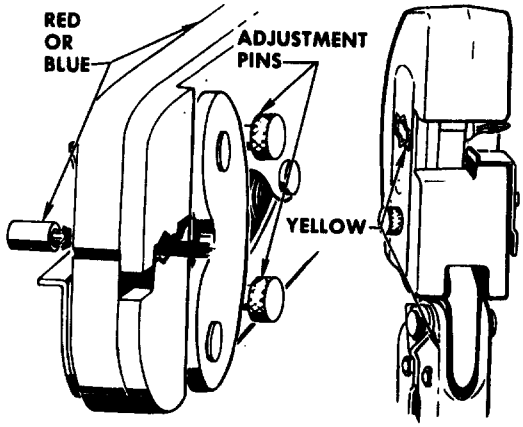

LUGGING "AMP" PERMANENT SPLICES

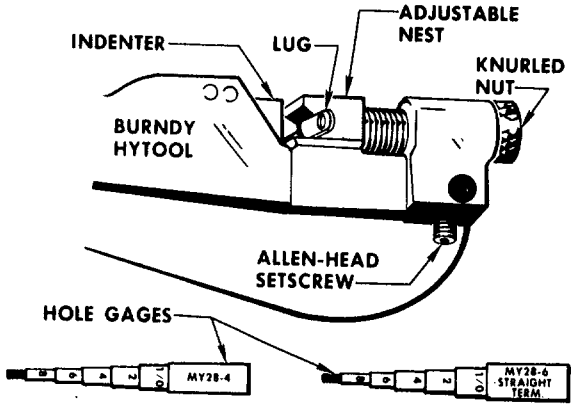

LUGGING BURNDY INSULATED TERMINALS - SIZES 8 TO 4/0

S370-2-54-50

Lugging Tools
Figure 20-00-2

© COPYRIGHT, 1981 BY ROCKWELL INTERNATIONAL

(3) Use proper Burndy handtool to indent. Indenting on the top is preferable for inspection purposes, but is equally effective on the bottom.

G. Lugged Terminal Pull-out Test

After lugging, to ensure that terminals are properly indented, a test sample of the terminal should be subjected to a pull-out test. The test sample should be capable of withstanding a steady (one inch per minute) pull equivalent to the listed minimum pull-out value for the size wire as shown in the following table:

CABLE SIZE	MINIMUM PULL-OUT VALUE (Pounds)
22	15
20	19
18	38
16	50
14	70
12	110
10	180
8	250
6	300
4	400
2	555
1	650
1/0	760
2/0	860

5. Ferrules

A. Installing MS25311( ) Ferrules on Shielded Wires

(1) Be sure to select MS25311( ) ferrule by size and color. (See figure 20-00-3.) The size of the ferrule permits a slight clearance which allows the insulated wire to pass freely through the center opening of the ferrule.

(2) Follow approved stripping procedures to strip shielding and expose insulated wire. Make sure that insulated conductor(s) is not damaged.

(3) Fan shielding slightly by rotating center conductor(s).

© COPYRIGHT, 1981 BY ROCKWELL INTERNATIONAL

(4) Trim shielding to a smooth, straight end. Leave no stray strands.

(5) Slip ferrule over shielded wire. The inner surface of the metal barrel will slide under the shielding, and the outer surface of the metal barrel will slide over the shielding, permitting the insulated conductor to pass through the center opening of the ferrule. The ferrule should be installed on the shielded area of the wire as close close as possible to its connector; however, enough room should be allowed for maintenance of the wire. (See figure 20-00-3.)

(6) By means of inspection holes, check to see that shielding is within end of metal barrel.

(7) Insert ground or jumper wire between inner and outer metal barrel, within end of metal barrel.

(8) Crimp ferrule by placing ferrule flush against stop plate of MS25312( ) crimping handtool. Make sure inspection holes on ferrule are vertical and are in line with crimp.

(9) Select correct MS25312( ) crimping handtool by color code and groove size. Make sure color code on crimping handtool and color code of insulating sleeve on ferrule are the same. The dash number on the crimping handtool. (See figure 20-00-3.)

(10) Spot-tie ground or jumper wire within 3/8 inch of ferrule.

(11) Do not install ferrules bunched together in a wire bundle. Stagger ferrules within bundle at approximately 1/2-inch intervals.

6. Crimped Contacts For KPTM and CA-RX Connectors

A. Crimped Contact Handling Precautions

(1) Hands must be clean and dry before handling any part of the contacts.

(2) Never use a lubricant on contacts or grommet inserts. If contacts become contaminated with grease or lubricating fluid, they must be cleaned thoroughly, using any quick-drying liquid degreasing solvent.

(3) Use correct tools and follow correct procedures. Never use pliers to insert or extract contacts.

© COPYRIGHT, 1981 BY ROCKWELL INTERNATIONAL

(4) Use approved wire stripping procedures. See figure 20-00-4 for wire stripping length.

(5) Insert stripped end of wire into opening in end of crimp barrel. (See figure 20-00-4.) The insulation of the stripped wire butts up against the end of the crimp barrel on the contact. The inserted conductor must be visible throught the inspection hole on the side of the crimp barrel. (See figure 20-00-4.)

(6) Inserted contact mating end into opening in MS3191-1 crimp head. (See figure 20-00-4.)

(7) Close tool completely to crimp contact. Note that unless tool has been completely closed, ensuring a satisfactory crimp, tool will not release contact.

(8) Remove crimped contact and wire from tool, and inspect crimped area. The wire conductor must be visible throught the inspection hole in the side of the crimp barrel. (See figure 20-00-4.)

C. Inserting Cannon Electric Crimped Contacts

(1) Slide hardware of connector over bundle of crimped wires. (See figure 20-00-5.) Make sure that hardware is retained in correct order for reassembling after all contacts have been inserted.

(2) Insert crimped contact and wire, by hand, into grommet insert hole closest to outer edge so that crimp barrel is still exposed. (See figure 20-00-5.) Make sure that crimped contact and wire si correct wire for designated terminal of connector. See figure 1-4, sheet 5, for terminal designation identification for KPTM( )-22-55( ) connectors. If there is a question of correct wire and terminal hookup, refer to applicable wiring diagram.

(3) Select correct insertion tool. (See figure 20-00-6.)

(4) Place tool in position behind crimped contact so that wire lead runs along groove of tool, and tip of tool slides over end of contact and butts against shoulder in front of crimp barrel. (See figure 20-00-5.)

(5) Apply a slow, even pressure and push contact strainght in until it snaps into position and stops against front shoulder built into grommet. The tool also has a shoulder stop to give a visual indication that the contact has been properly inserted. (See figure

© COPYRIGHT, 1981 BY ROCKWELL INTERNATIONAL

20-00-5.) Caution should be taken that the contacts will not be overinserted.

(6) If the contact is improperly positioned, ti can be reset by removing the contact with the correct extraction tool and reinserted. See figure 20-00-6 for correct extraction tool and figure 20-00-7 for removing crimped contact.

(7) Remove insertion tool by pulling insertion tool straight out from face of grommet.

(8) After all insertions, check front of connector to be sure that contacts have not been overinserted or underinserted. If properly inserted, the contacts will be in alignment with each other.

(9) If all grommet holes are not used, insert correct unused contact into empty grommet hole and then, with the exception of boox-mounted connectors (for example, KPTM02E or CA3102RX connector), insert sealing plug furnished with connector. (See figure 20-00-6.) When installing sealing plug furnished with connector, insert either end of sealing plug into empty grommet hole. Do not push sealing plug all the way in, as this makes removal extremely difficult and will create an undesirable expansion of grommet.

(10) After all wires and grommet holes have been filled, reassemble hardware and tighten connector clamp nut by rotating clamp clockwise (when viewed from face of grommet) until a metal-to-metal stop is obtained. The back of the ferrule, endbell, and grommet will be aligned in a position flush to each other. The grommet may bulge slightly, depending on the wire size used. Tightening of the endbell must be complied with to maintain the maximum seal.

D. Removing ITT Cannon Electric Crimped Contacts

(1) Select correct extraction tool. (See figure 20-00-6.)

(2) For socket contact removal, use pin end of tool. (ITT Cannon Electric tool tips can be turned end-for-end by unscrewing the caps.) Insert tool into mating end of contact, and push contact out of connector. (See figure 20-00-7.)

(3) For pin removal, use tubular end of ITT Cannon Electric tool. Insert tool over mating end of contact and push contact out of back of connector. (See figure 20-00-7.)

© COPYRIGHT, 1981 BY ROCKWELL INTERNATIONAL

7. Pressure Feedthrough (Gland) Seal

A. Sealing Unused Holes in Glands

(1) After all wires have been inserted through the rubber grommet, all unused contact holes in the rubber grommet must have the correct size of sealing plug (filler) inserted to ensure a pressure seal. (See figure 20-00-6 for sealing plug sizes, and figure 20-00-7 for installation of sealing plugs.)

(2) To permit entry of complete coaxial cable (with connections on) through grommet, cut rubber grommet in one place per cable and lay cable in grommet so that grommet fits securely around cable when clamping nut is tightened.

© COPYRIGHT, 1981 BY ROCKWELL INTERNATIONAL

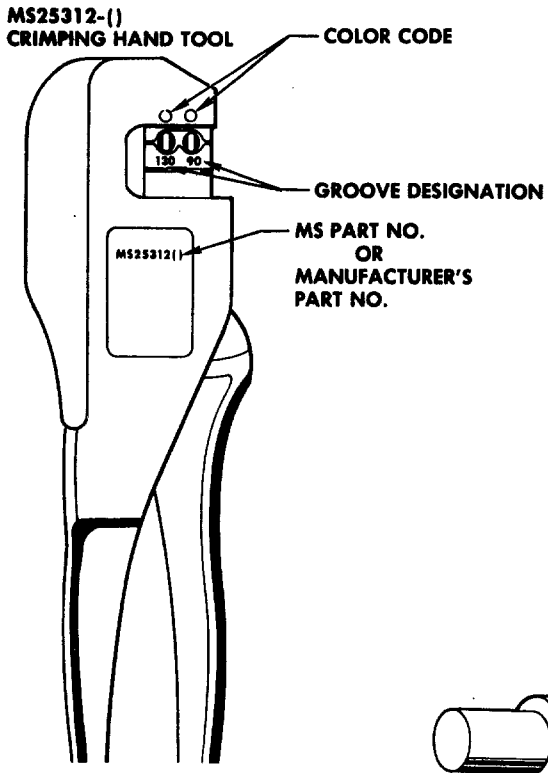

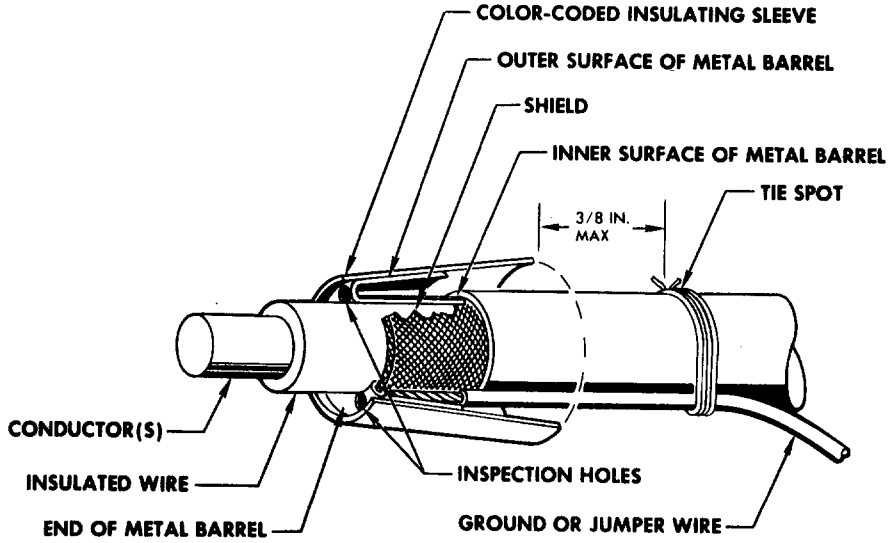

FERRULE	COLOR	CRIMPING HAND TOOL	GROOVE
MS25311-110	BLUE	MS25312-1	110
MS25311-130	BLACK	MS25312-2	130
MS25311-150	GREEN	MS25312-3	150
MS25311-180	BLUE	MS25312-4	180
MS25311-200	YELLOW	MS25312-4	200

NOTE Burndy-type "YEC" ferrules and MR8EC-( ) crimping hand tool may be used in place of MS25311-( ) ferrules and MS25312-( ) crimping hand tools. The last digit(s) of the manufacturer's ferrule part number will be the same as the MS25311-( ) dash number; the dash number of the manufacturer's crimping hand tool part number will be the same as the MS25312-( ) dash number. (Example: Ferrule YEC**90** may be used in place of MS25311-**90** ferrule; crimping hand tool MR8EC-2 may be used in place of MS25312-2 crimping hand tool, etc.) The groove and color codes remain the same.

S370-2-54-51

Typical Installation for Ferrules MS25311 on Shielded Wires
Figure 20-00-3

© COPYRIGHT, 1981 BY ROCKWELL INTERNATIONAL

MS3191-1 CRIMP TOOL
(SHOWING BOTH SIDES)

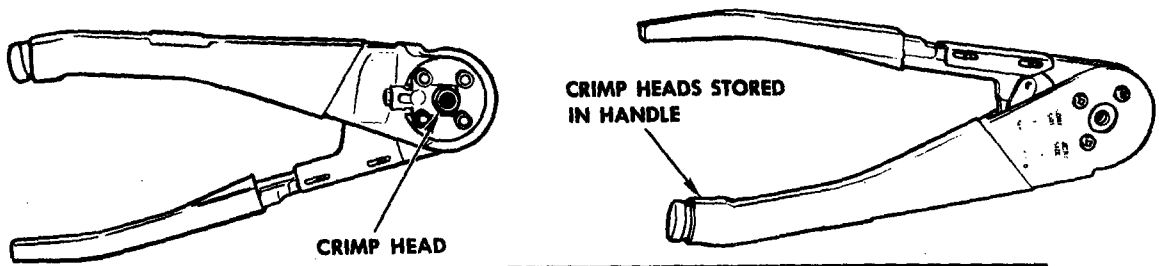

CRIMP HEAD COLOR CODE	CONTACT SIZE	
RED	NO. 20	FOR APPLICATION, SEE FIGURE 20-00-6
BLUE	NO. 16	
YELLOW	NO. 12	

WIRE STRIPPING LENGTHS

CONTACT SIZE	PIN	SOCKET	STRIPPING LENGTH (IN.)
20	030-9054-003	031-9096-002	17/64
20	030-1713-000	031-0964-000	3/16
20	030-9036-002	031-9037-003	3/16
20	030-9163-000	031-9162-000	3/16
16	030-9032-002	031-9095-004	1/4
16	030-9032-003	031-9095-003	1/4
12	030-9048-000	031-9043-000	1/4

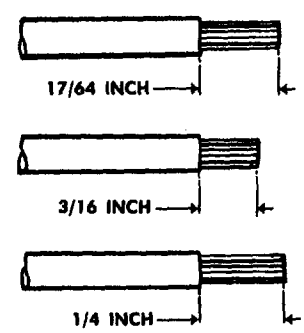

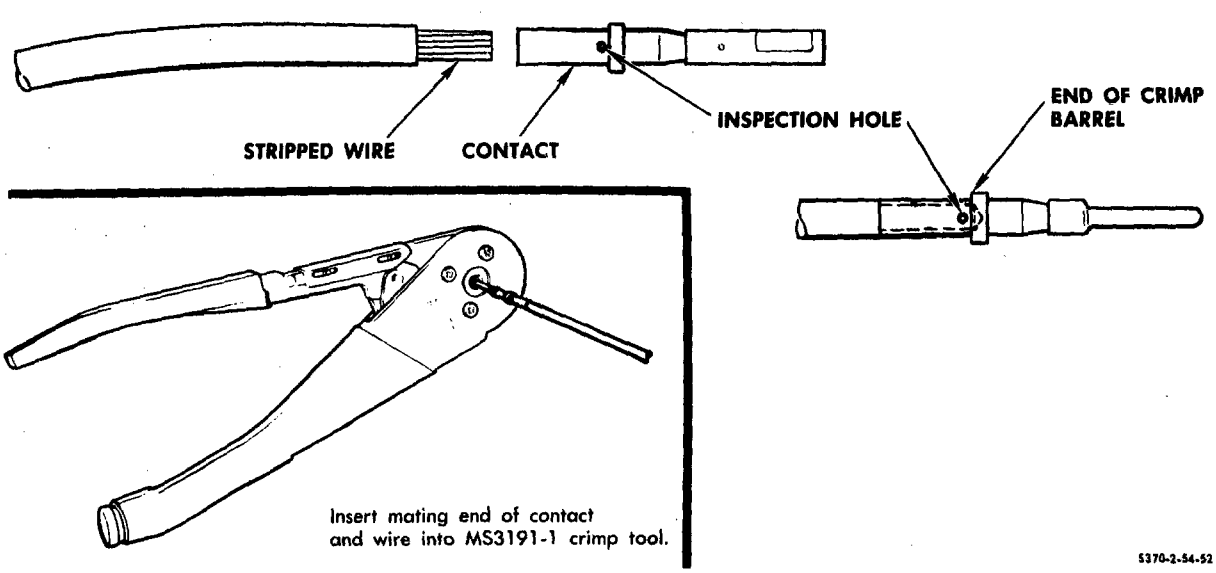

5370-2-54-52

Crimping ITT Cannon Electric Contacts
With MS3191-1 Crimp Tool
Figure 20-00-4

© COPYRIGHT, 1981 BY ROCKWELL INTERNATIONAL

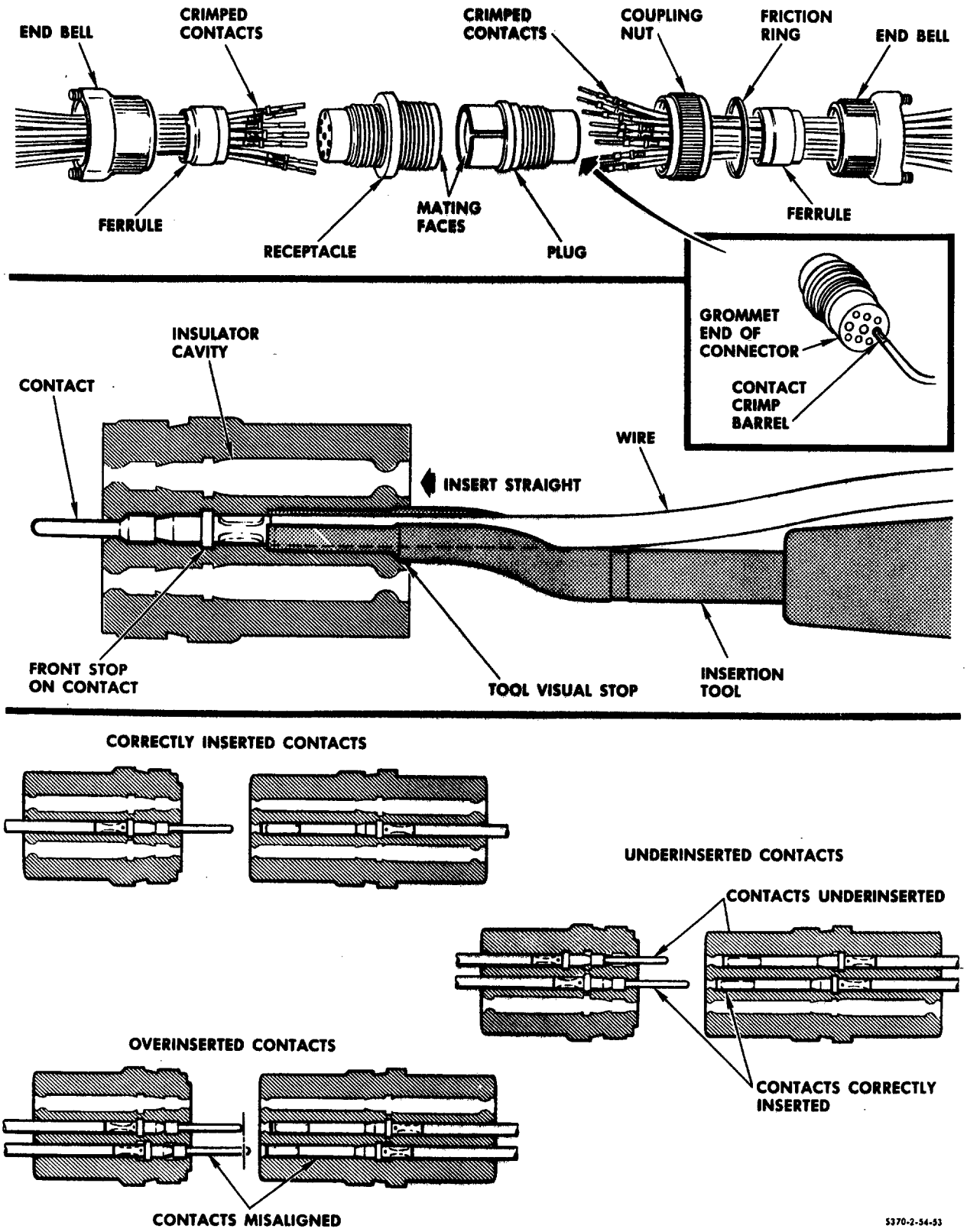

Inserting ITT Cannon Electric Crimped Contacts
Figure 20-00-5

© COPYRIGHT, 1981 BY ROCKWELL INTERNATIONAL

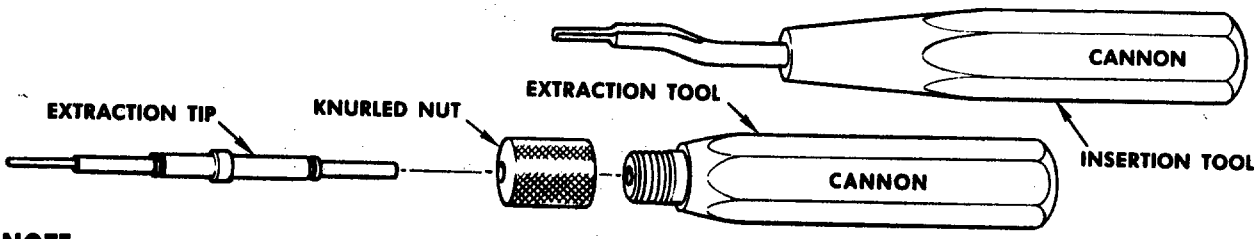

NOTE ITT Cannon Electric extraction tools are used for both socket and pin contacts. By removing the knurled nut on the tool, the tip may be reversed end for end. The tubular tip is for pin contact removal. The pin tip is for socket contact. ITT Cannon Electric tools, and contacts, and insert fillers may be purchased from Cannon Electric Co, 3208 Humboldt St, Los Angeles 31, California 90031.

KPTM CONNECTOR SEALING PLUGS

ORDER NUMBER	CONTACT SIZE	COLOR CODE
MS3187A20	20	RED
MS3187-16	16	BLUE
MS3187-12	12	YELLOW

CA310 ( ) RX CONNECTOR SEALING PLUGS

ORDER NUMBER	CONTACT SIZE	WIRE SIZE	COLOR CODE
225-1000-000 (MS25251-20)	20	22-20	RED
225-0017-000 (MS25251-16)	16	22-16	BLUE
225-0018-000 (MS25251-12)	12	14-12	YELLOW

KPTM CONNECTORS

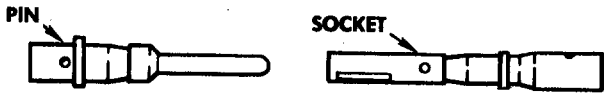

INSERTION TOOL	EXTRACTION TOOL	CONTACT SIZE	PIN	SOCKET	COLOR CODE (CRIMP HEAD AND CONTACTS)	WIRE SIZE	CRIMPING HAND TOOL
CIT20-18 (MS24256-A20)	CET20-4 (MS24256-R20)	20 (WITHOUT INSULATION SUPPORT)	030-9054-003	031-9096-002	RED	NO. 20 AND 22 WIRE	MS3191-1
CIT20-5A (MS24256-A20)	CET20-4 (MS24256-R20)	20 (WITH INSULATION SUPPORT)	030-9163-000	031-9162-000	RED	NO. 20, 22, 18, AND 16 WIRE; NO. 14 WIRE REQUIRES A JUMPER WIRE	MS3191-1
CIT16-1 (MS24256-A16)	CET16-3A (MS24256-R16)	16	030-9032-003	031-9095-003	BLUE	NO. 18, 16 AND 14 WIRE	MS3191-1

CA310( )RX CONNECTORS

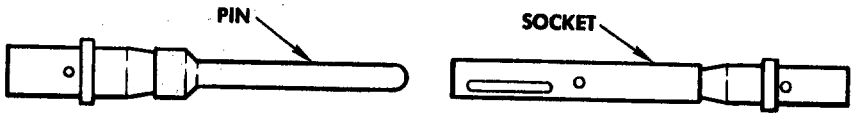

CIT20-4 (MS24256-A20)	CET20-3 (MS24256-R20)	20	030-9036-002	031-9074-003	RED	NO. 20 AND 22	MS3191-1
CIT16-1 (MS24256-A16)	CET16-3A (MS24256-R16)	16	030-9032-002	031-9095-004	BLUE	NO. 18, 16 AND 14 WIRE	MS3191-1
CIT12-1 (MS24256-A12)	CET12-1A (MS24256-R12)	12	030-9048-000	031-9043-000	YELLOW	NO. 12 AND 10 WIRE	MS3191-1

S370-2-54-54

Inserting and Extraction Tools, Contacts, and Sealing Plugs for ITT Cannon Electric Crimped Contacts
Figure 20-00-6

© COPYRIGHT, 1981 BY ROCKWELL INTERNATIONAL

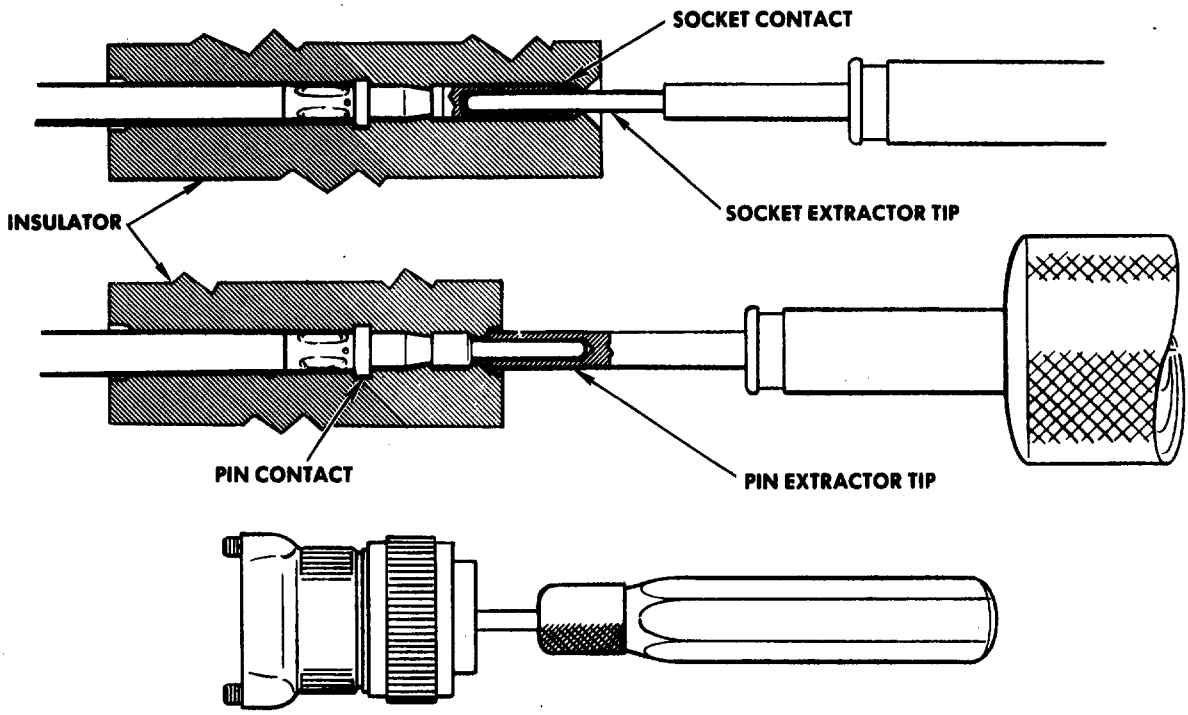

NOTE ITT Cannon Electric tools illustrated.

EXTRACTING ITT CANNON ELECTRIC CRIMPED CONTACTS

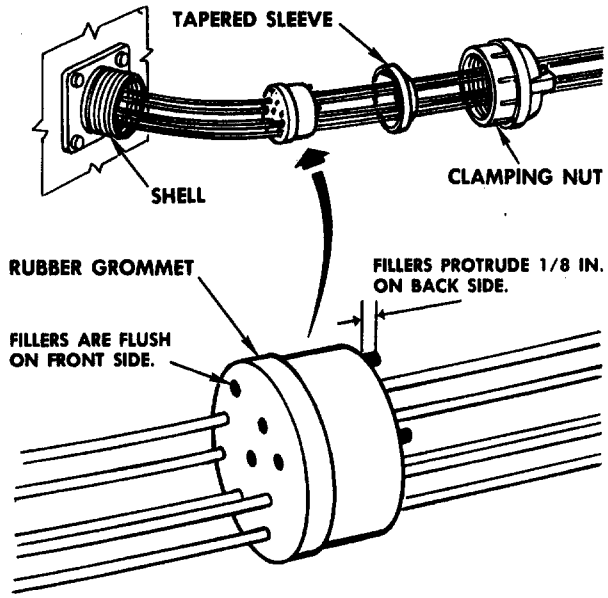

SEALING UNUSED CONTACT HOLES FOR PRESSURE FEEDTHRU (GLANDS)

S370-2-54-55

Extracting ITT Cannon Electric Crimped Contacts and
Sealing Unused Contact Holes for Pressure Feedthrough (Glands)
Figure 20-00-7

© COPYRIGHT, 1981 BY ROCKWELL INTERNATIONAL

CHAPTER

21

AIR CONDITIONING

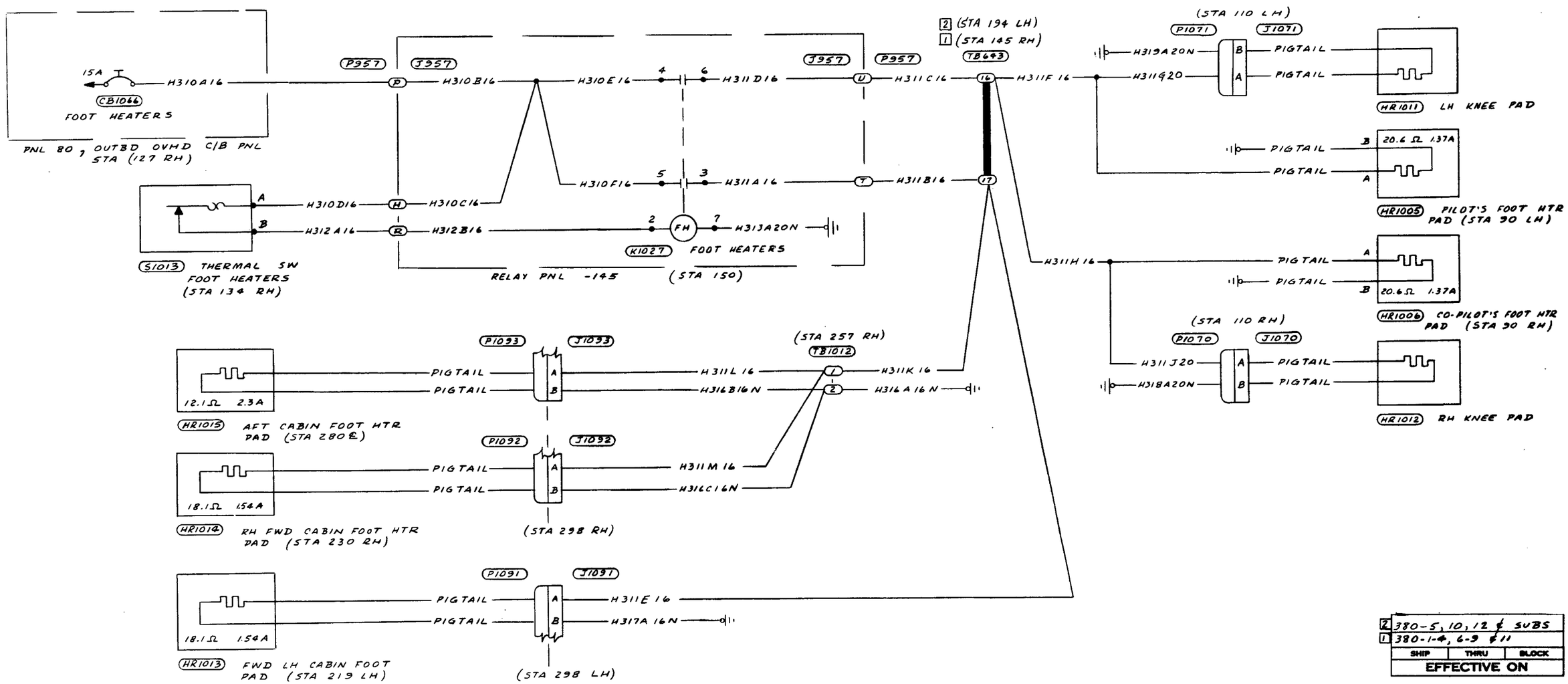

© COPYRIGHT, 1981 BY ROCKWELL INTERNATIONAL

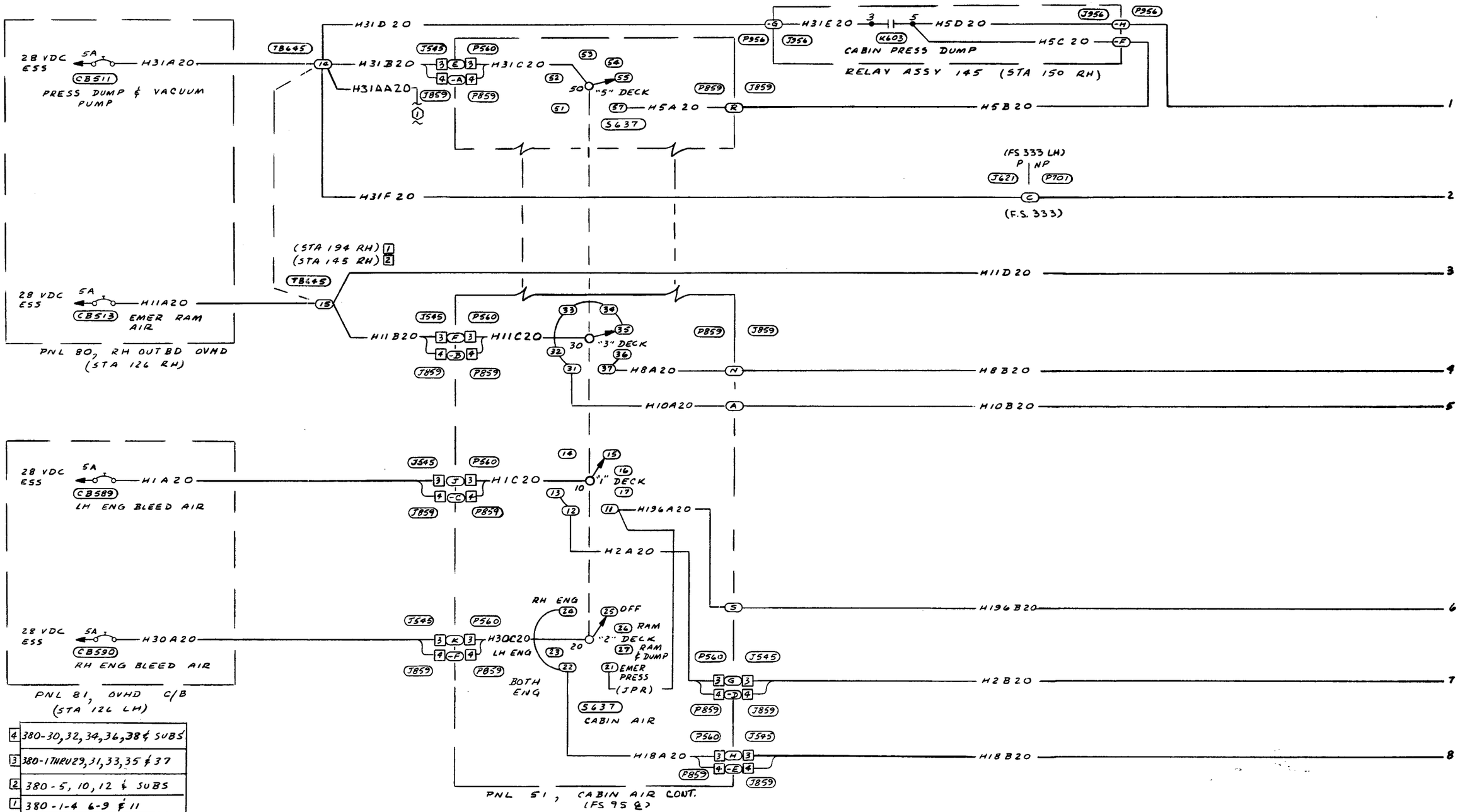

4	380-30,32,34,36,38 & SUBS		
3	380-1 THRU 29,31,33,35 & 37		
2	380-5, 10, 12 & SUBS		
1	380-1-4 6-9 & 11		
	SHIP	THRU	BLOCK
	EFFECTIVE ON		

NOTES
1. F6.1 VACUUM PUMP SYSTEM

CABIN PRESSURE & TEMPERATURE CONTROL AND WARNING
(Sheet 1 of 2)

© COPYRIGHT, 1981 BY ROCKWELL INTERNATIONAL

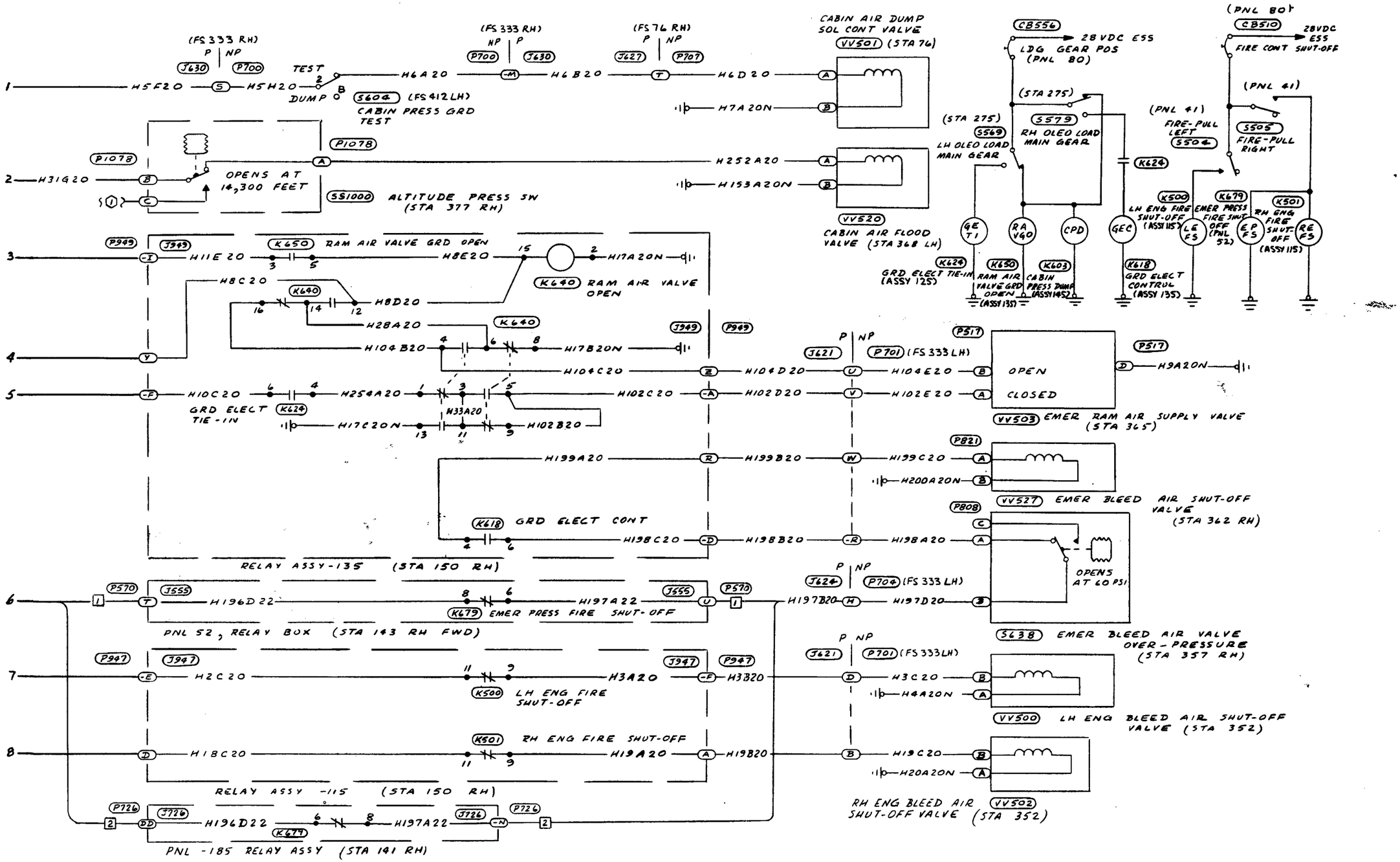

CABIN PRESSURE & TEMPERATURE CONTROL AND WARNING
(Sheet 2 of 2)

© COPYRIGHT, 1981 BY ROCKWELL INTERNATIONAL

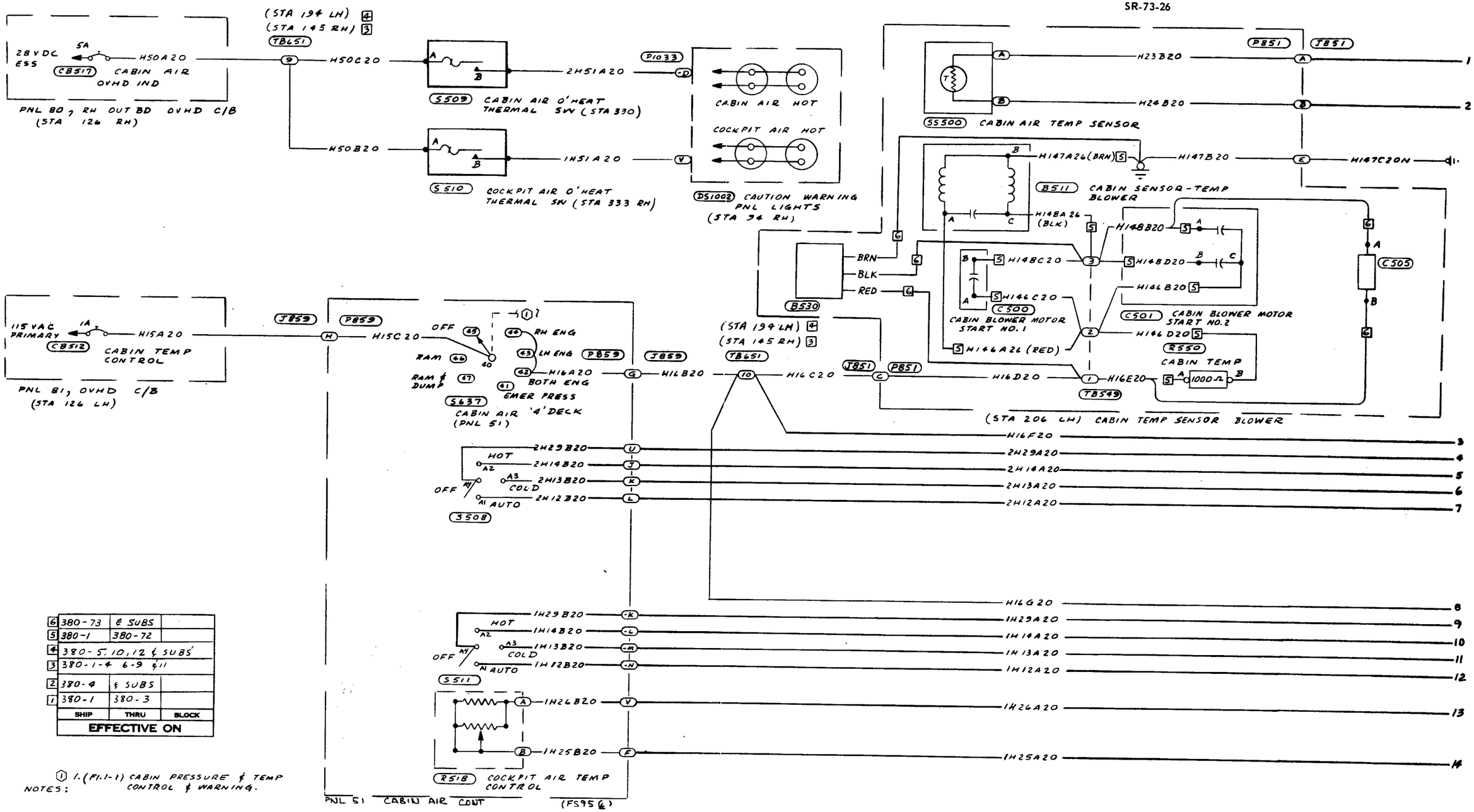

6	380-73	& SUBS	
5	380-1	380-72	
4	380-5, 10, 12 & SUBS		
3	380-1-4 6-9 & 11		
2	380-4	& SUBS	
1	380-1	380-3	
	SHIP	THRU	BLOCK
	EFFECTIVE ON		

NOTES: (1) 1. (F1.1-1) CABIN PRESSURE & TEMP CONTROL & WARNING.

COCKPIT & CABIN TEMPERATURE CONTROL AND WARNING
(Sheet 1 of 2)

© COPYRIGHT, 1981 BY ROCKWELL INTERNATIONAL

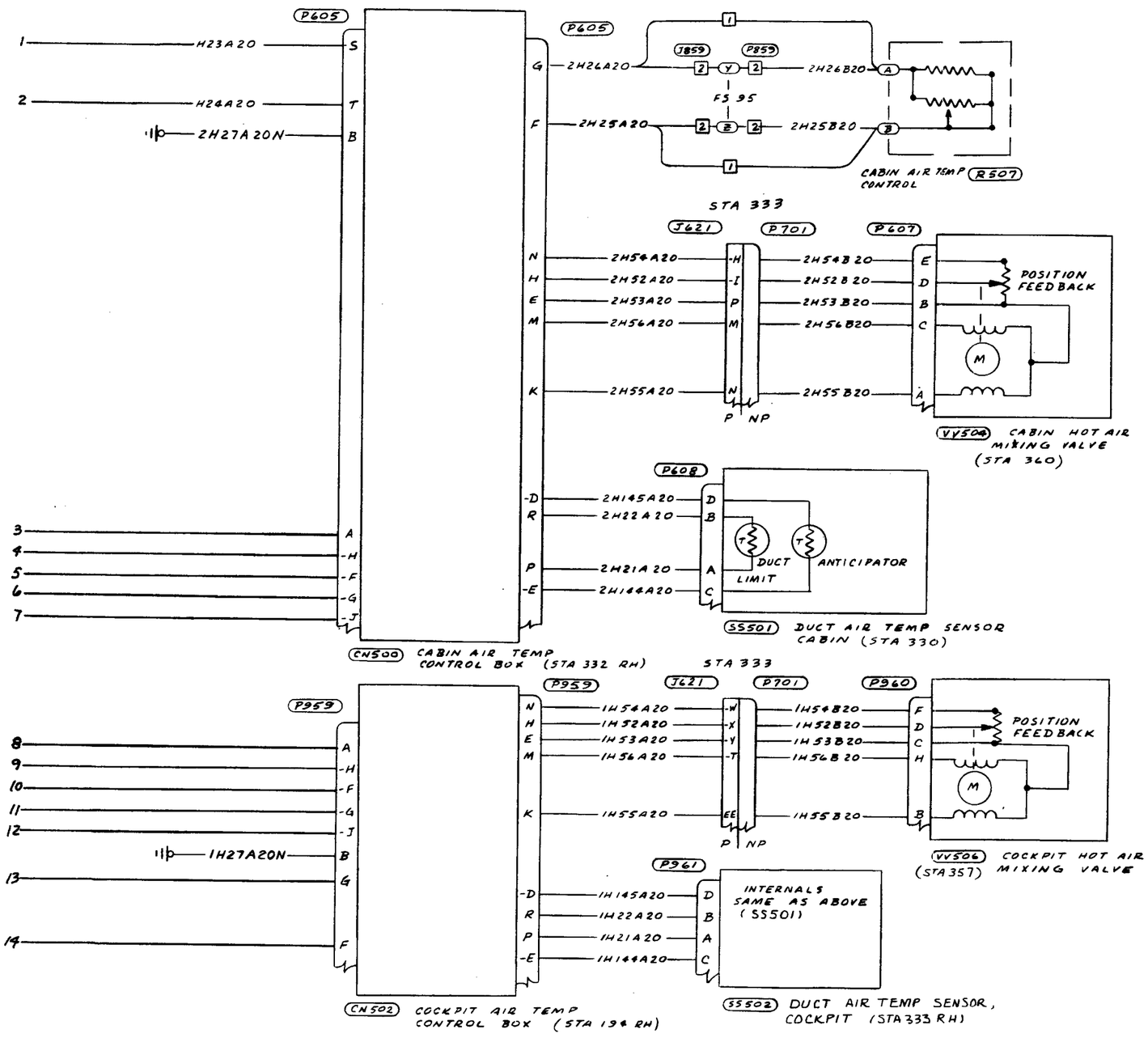

COCKPIT & CABIN TEMPERATURE CONTROL AND WARNING
(Sheet 2 of 2)

© COPYRIGHT, 1981 BY ROCKWELL INTERNATIONAL

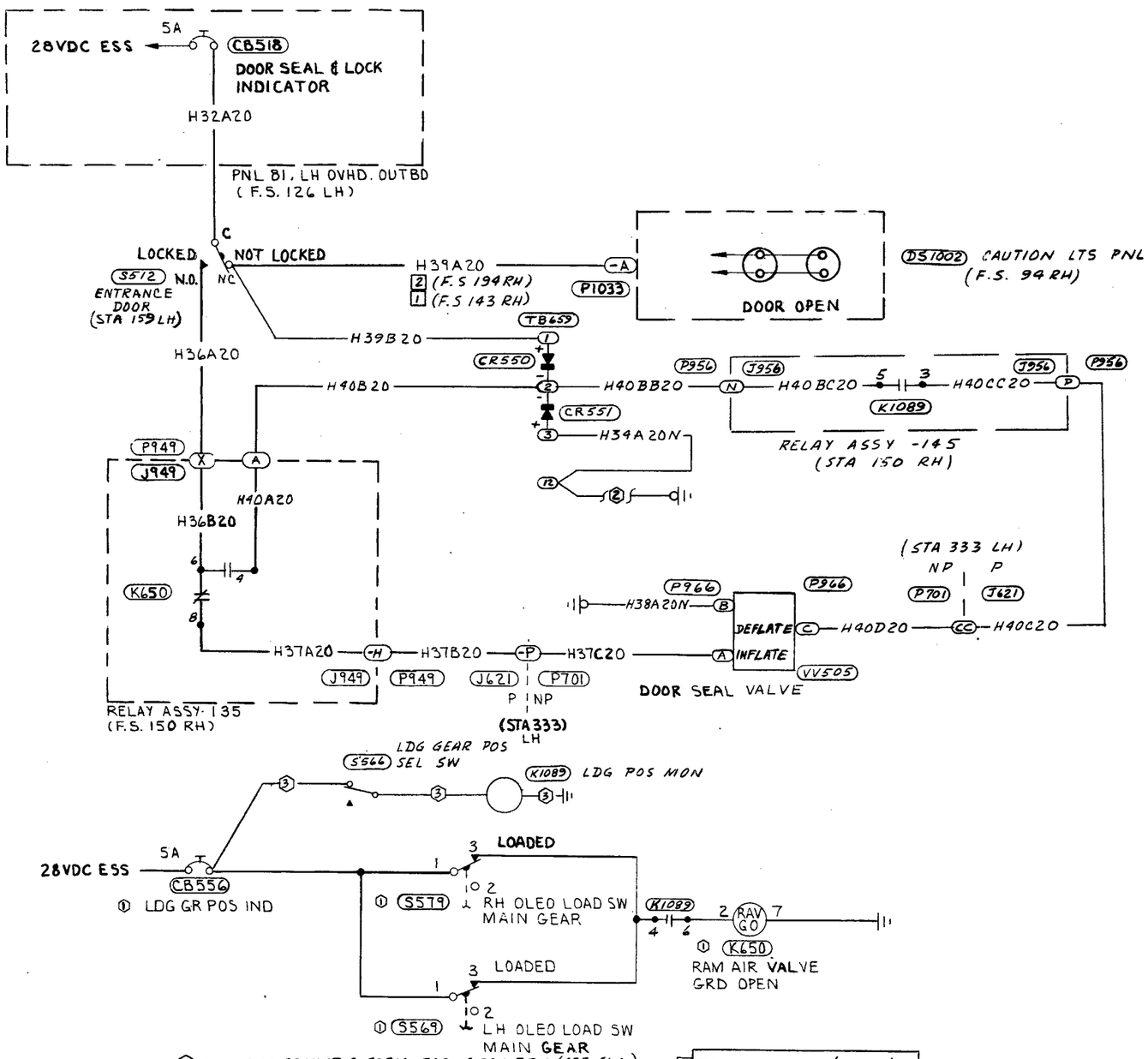

③ SHOWN IN SCHMATIC FORM FOR CIRCUITRY. (SEE E1.1)
② FOR DETAIL WIRING SEE B7.1 ELEC GRD SYS
① SHOWN IN SCHEMATIC FORM FOR CIRCUITRY ONLY. FOR DETAIL SEE E2.1. LDG GR POS IND & WARN SYS

2	380-5, 10, 12 & SUBS		
1	380-1-4, 6-9 & 11		
SHIP	THRU	BLOCK	
EFFECTIVE ON			

DOOR SEAL AND LOCK INDICATOR SYSTEM

© COPYRIGHT, 1981 BY ROCKWELL INTERNATIONAL

NOTES/LEGENDS

(1) SHOWN IN SCHEMATIC FORM FOR CIRCUITRY ONLY. FOR DETAIL CIRCUIT SEE: E2.1, LDG GR POSITION INDICATING & WARNING SYSTEM.

EFFECTIVITY

[1] 380-1 THRU -4, -6 THRU -9, -11, -12, -13, -15, -17, -19, -21, & -23

[2] 380-1 THRU -39

[3] 380-40 & SUBS & AIRPLANES CHANGED BY SOK 16

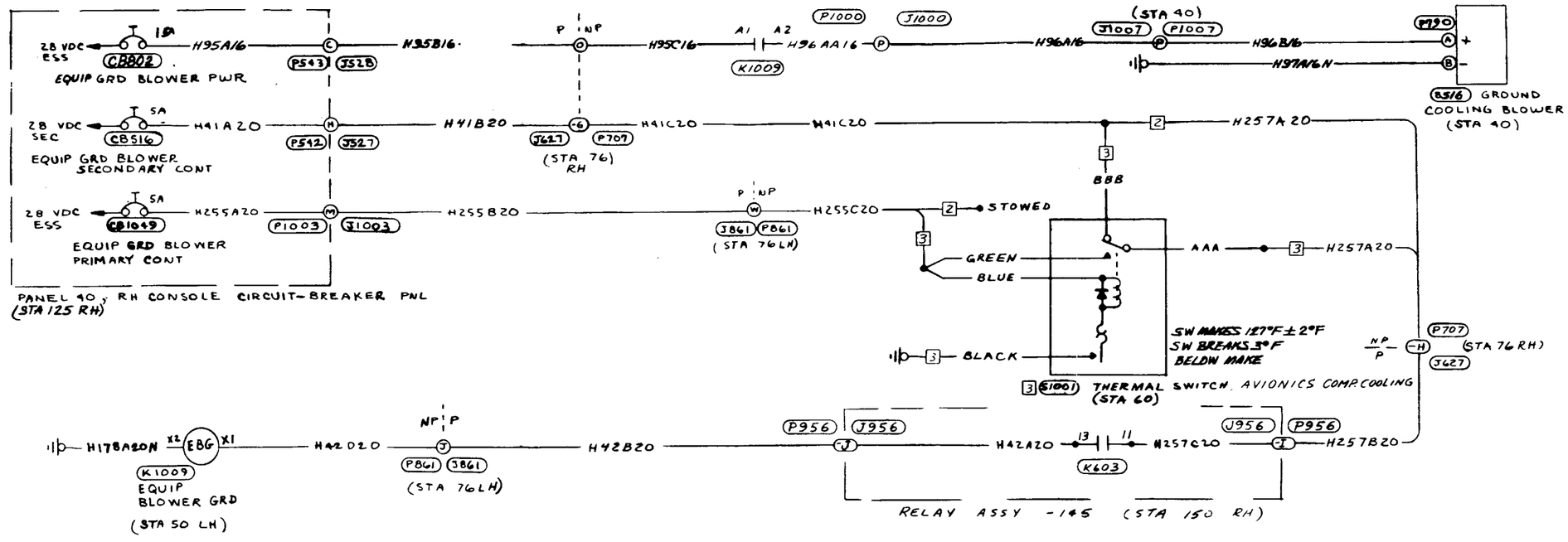

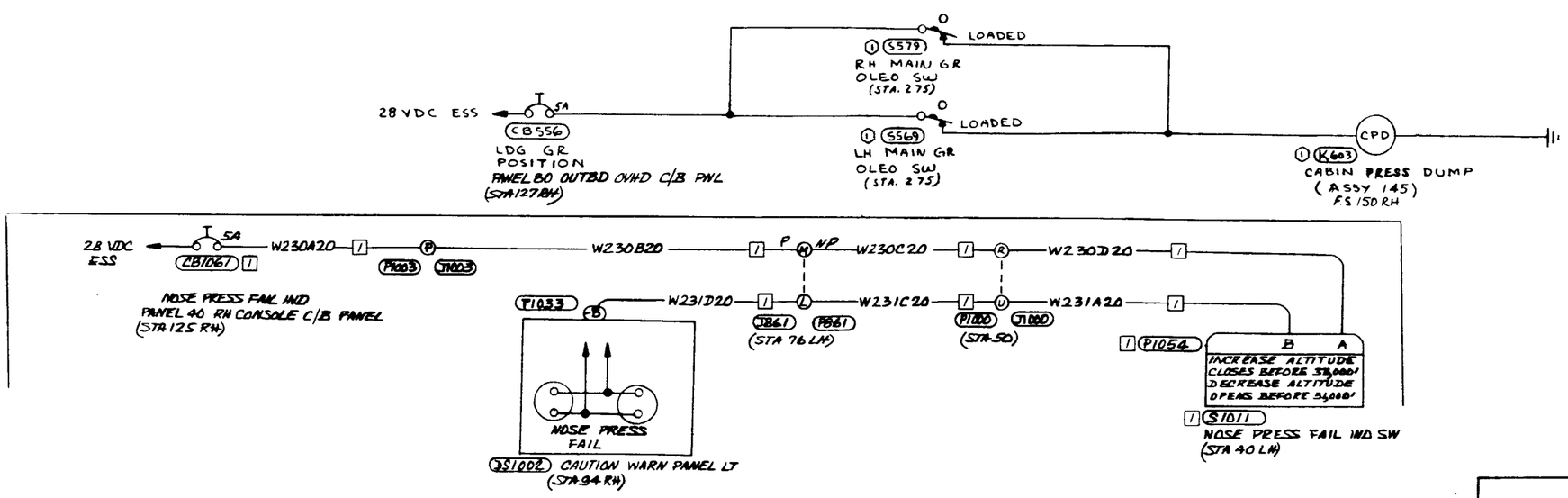

NOSE GROUND COOLING BLOWER AND PRESS FAIL SYS

© COPYRIGHT, 1984 BY SABRELINER CORPORATION

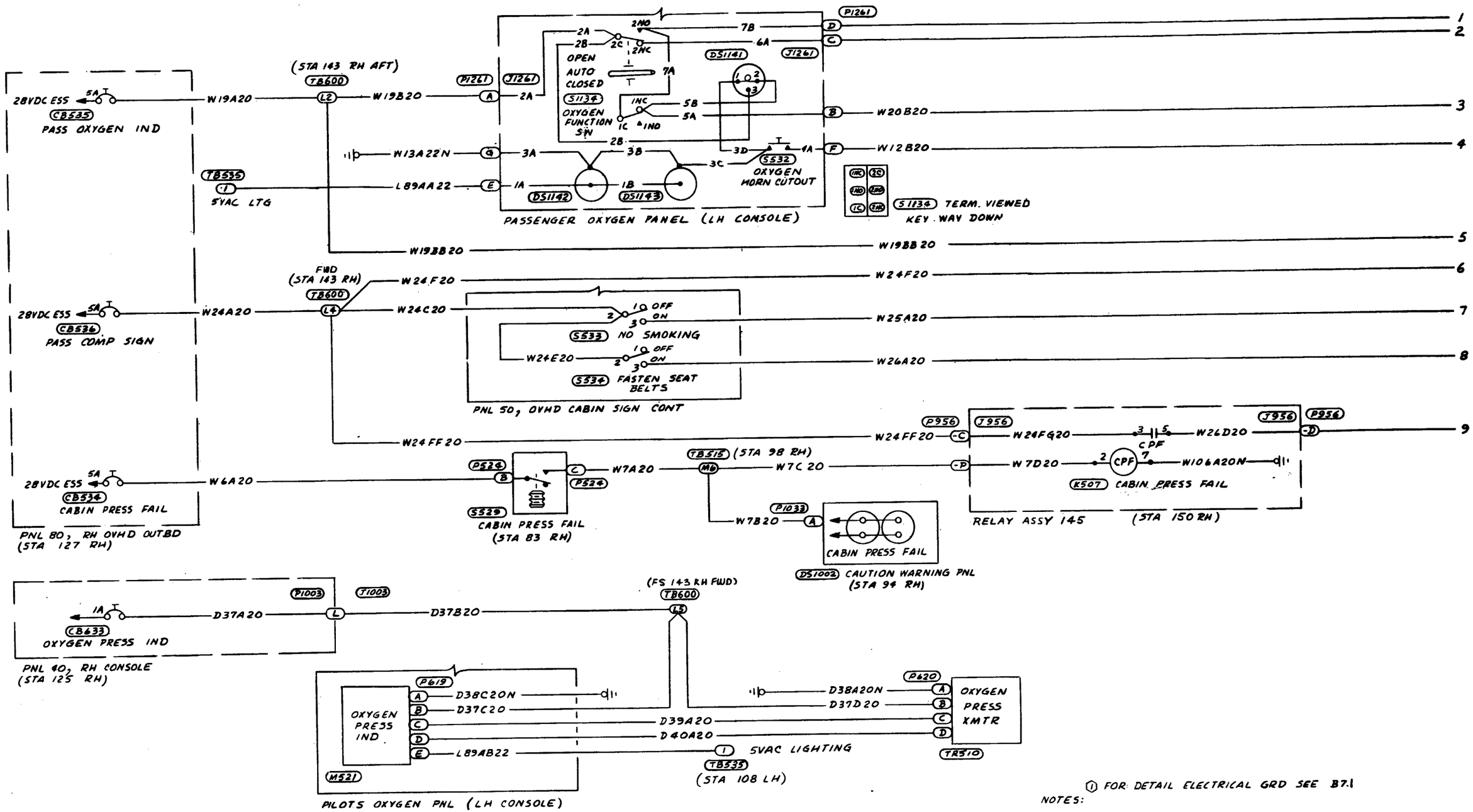

NOTES:

① FOR DETAIL ELECTRICAL GRD SEE B7.1

CABIN PRESS, WARNING SIGNS, OXYGEN FLOW
& OXYGEN PRESSURE SYSTEMS (380-1 Thru -4, -6 Thru -9 & -11)
(Sheet 1 of 2)

© COPYRIGHT, 1981 BY ROCKWELL INTERNATIONAL

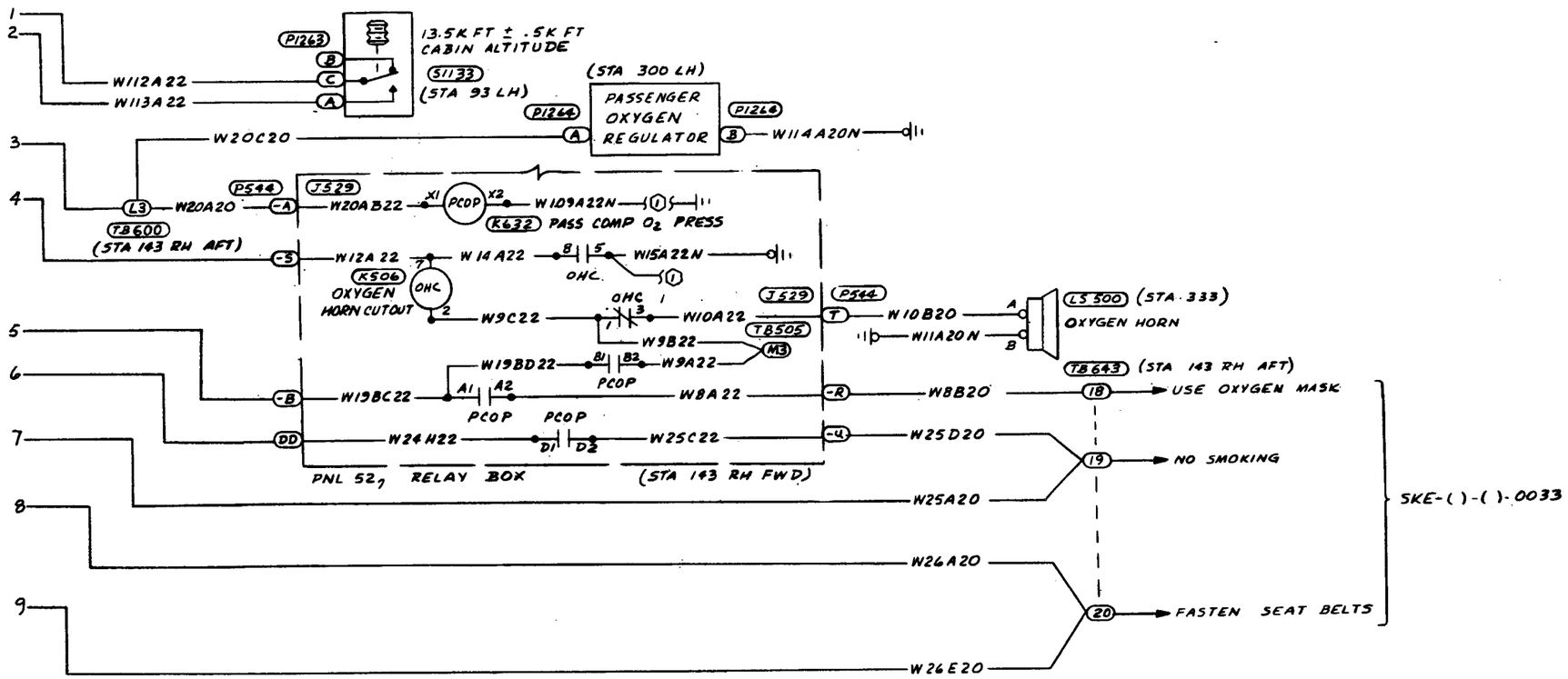

CABIN PRESS, WARNING SIGNS, OXYGEN FLOW
& OXYGEN PRESSURE SYSTEMS (380-1 Thru -4, -6 Thru -9 & -11)
(Sheet 2 of 2)

© COPYRIGHT, 1981 BY ROCKWELL INTERNATIONAL

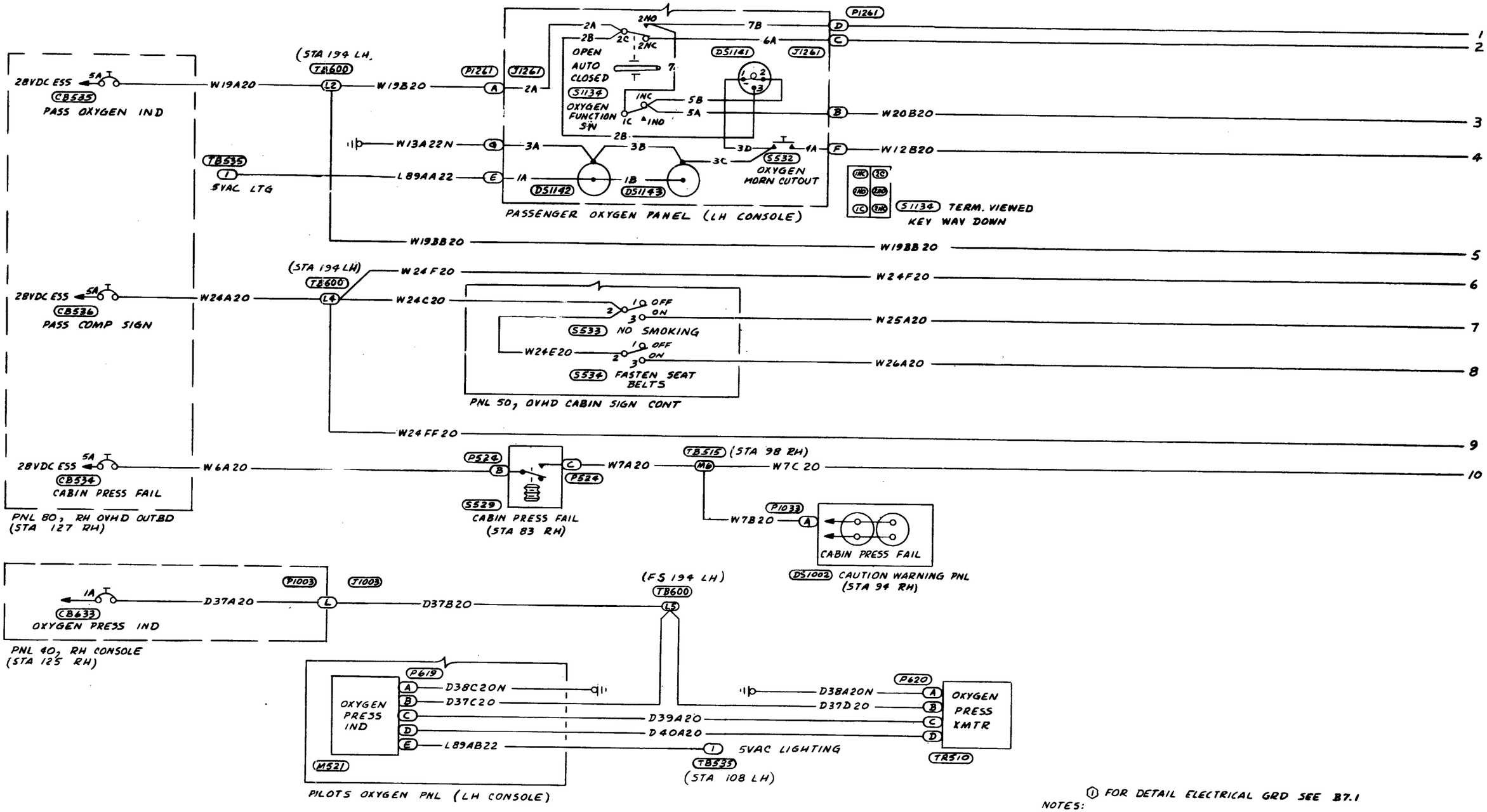

NOTES: ① FOR DETAIL ELECTRICAL GRD SEE B7.1

CABIN PRESS, WARNING SIGNS, OXYGEN FLOW
& OXYGEN PRESSURE SYSTEMS (380-5, -10, -12 & SUBS)
(Sheet 1 of 2)

© COPYRIGHT, 1981 BY ROCKWELL INTERNATIONAL

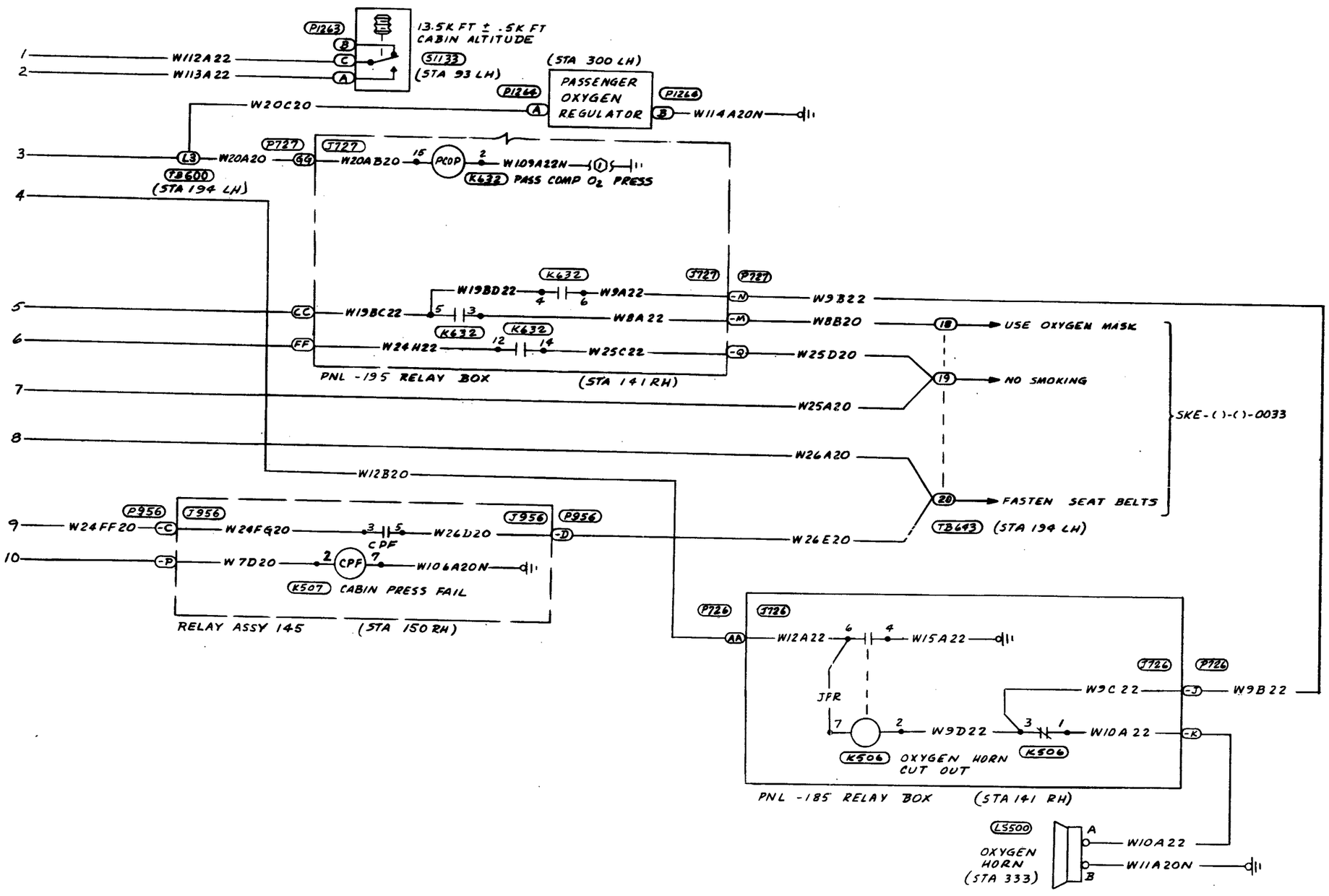

CABIN PRESS, WARNING SIGNS, OXYGEN FLOW
& OXYGEN PRESSURE SYSTEMS (380-5, -10, -12 & SUBS)
(Sheet 2 of 2)

© COPYRIGHT, 1981 BY ROCKWELL INTERNATIONAL

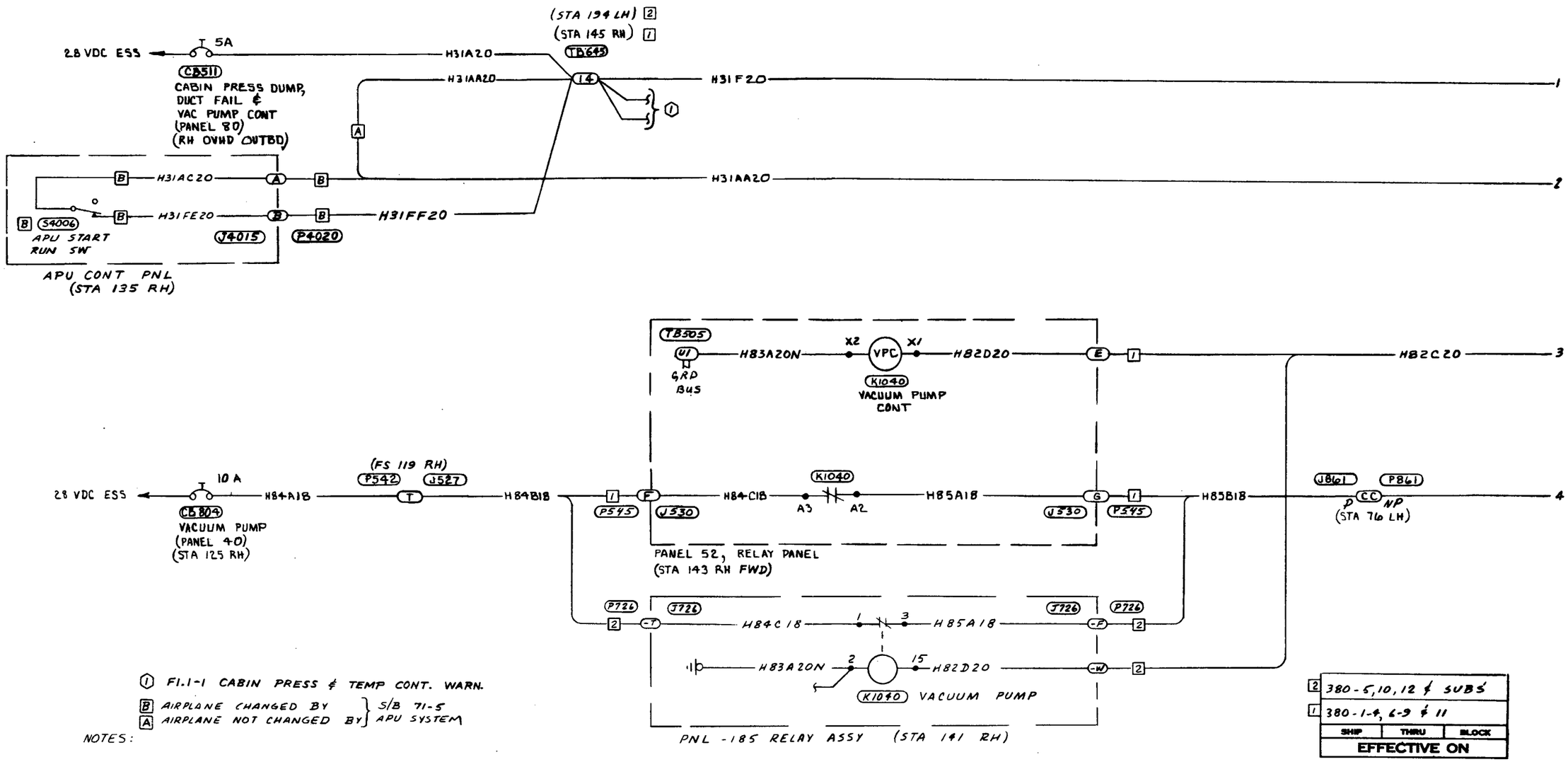

VACUUM PUMP SYSTEM
(Sheet 1 of 2)

© COPYRIGHT, 1981 BY ROCKWELL INTERNATIONAL

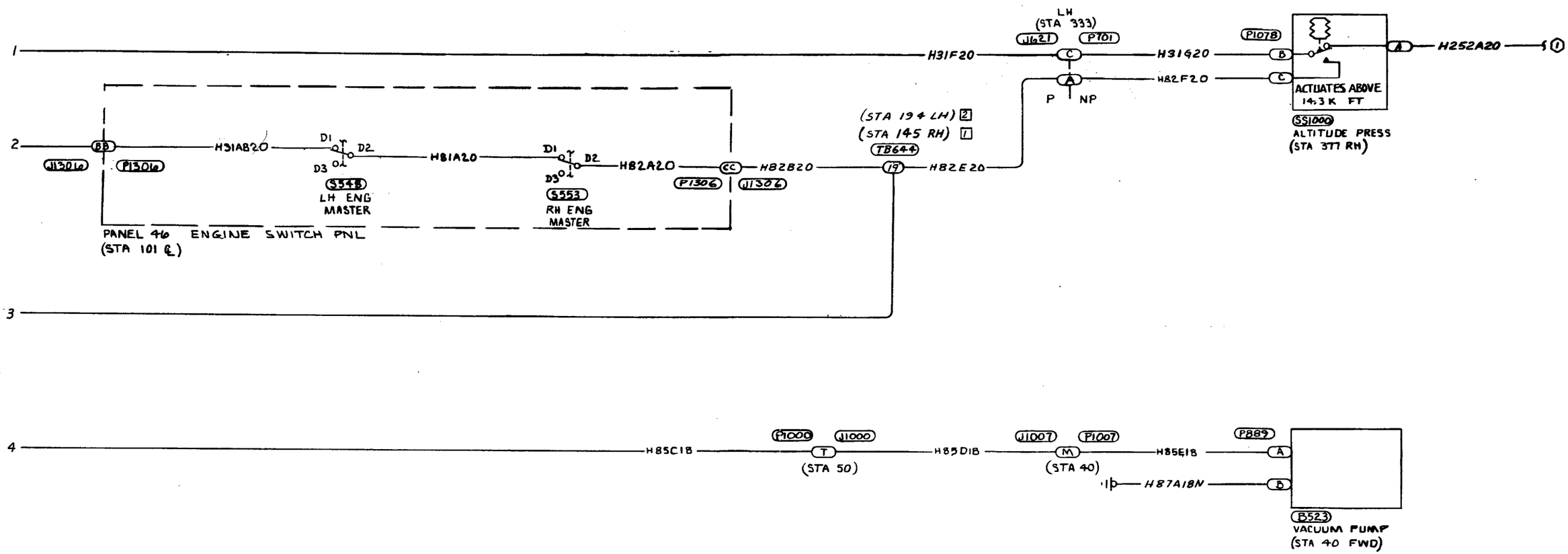

VACUUM PUMP SYSTEM
(Sheet 2 of 2)

© COPYRIGHT, 1981 BY ROCKWELL INTERNATIONAL

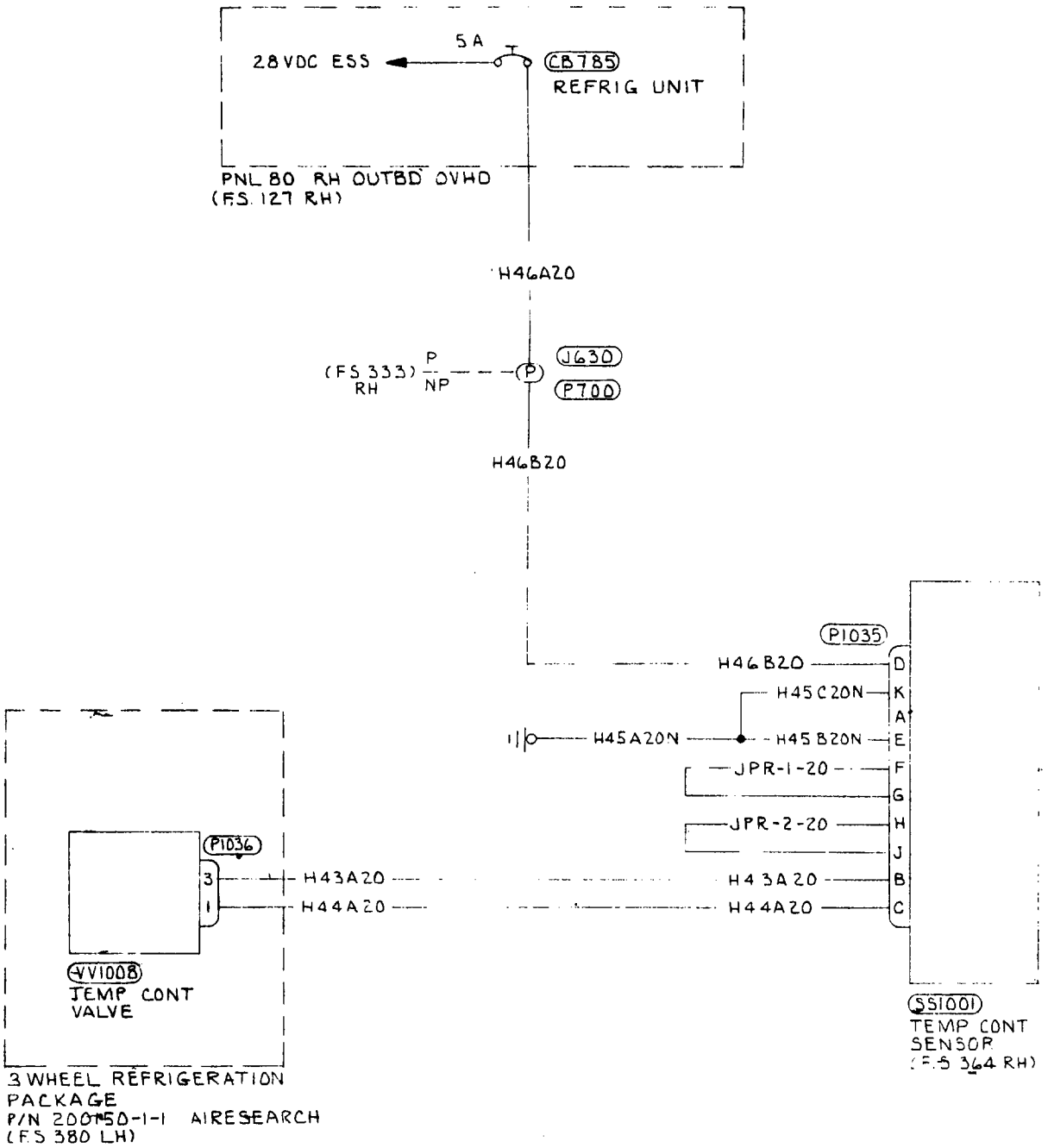

SHIP	THRU	BLOCK
EFFECTIVE ON		

F1.1-3

© COPYRIGHT, 1981 BY ROCKWELL INTERNATIONAL

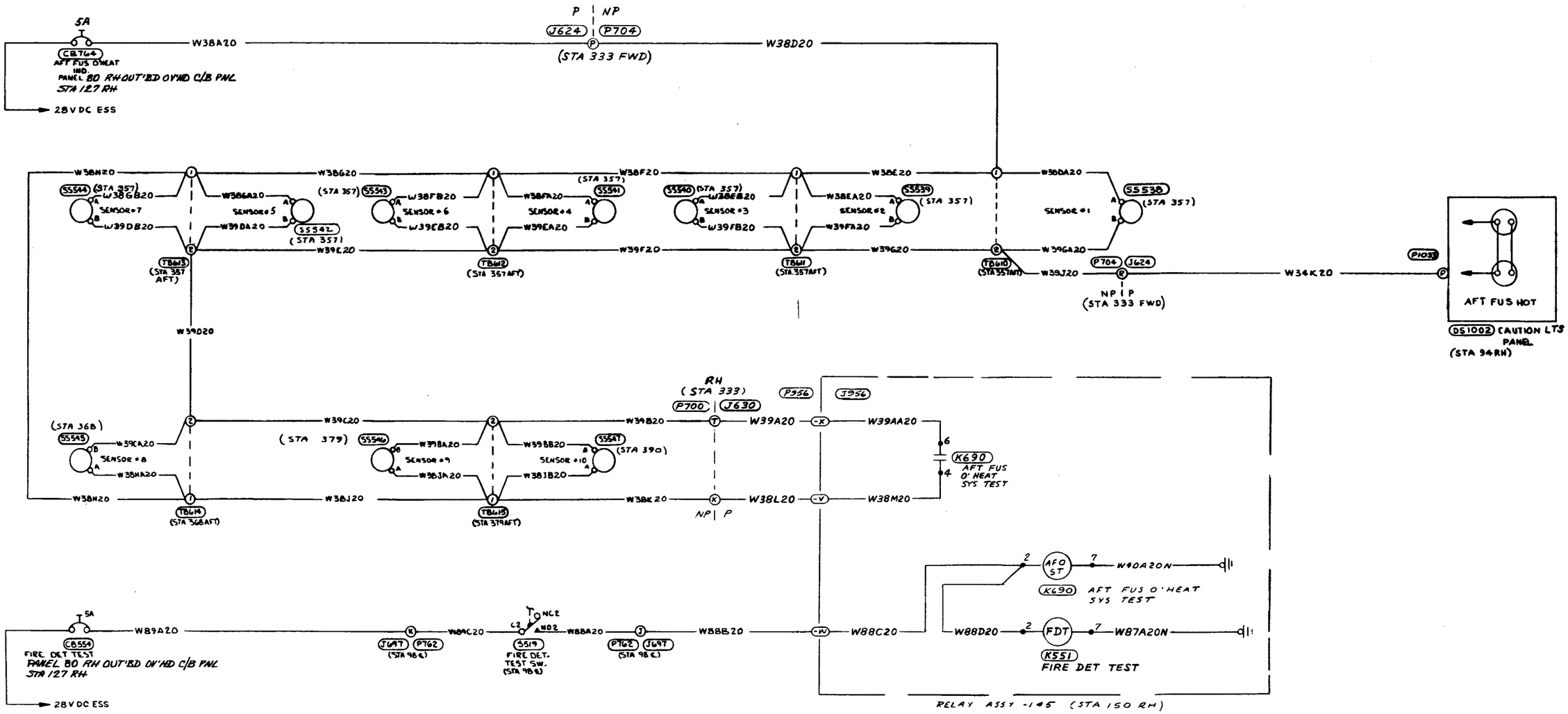

© COPYRIGHT, 1981 BY ROCKWELL INTERNATIONAL

CHAPTER 23

COMMUNICATIONS

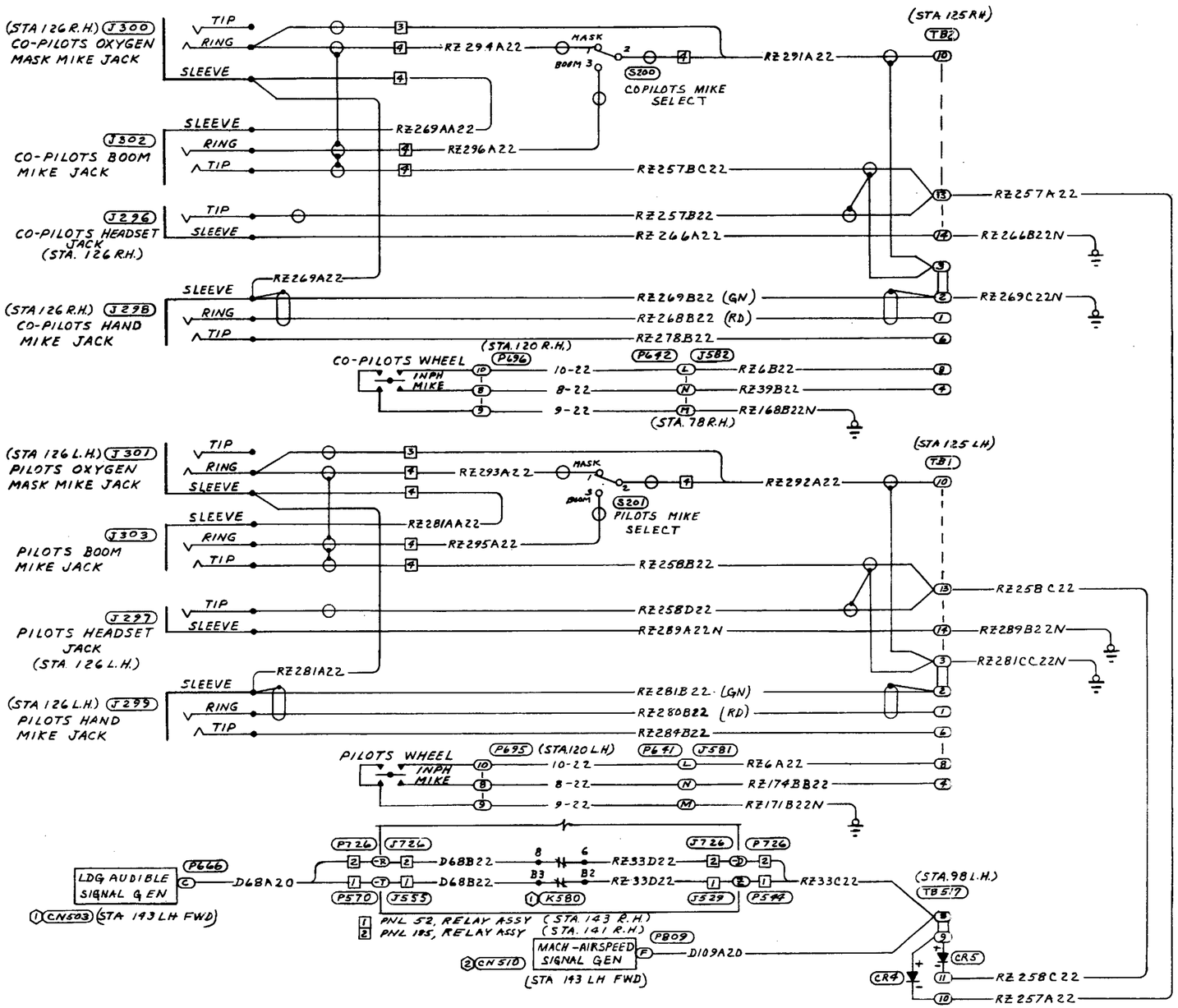

NOTES:
2. (2) J17.1 MACH AIRSPEED WARNING
1. (1) E2.1 LDG POSITION & WARNING

4	380-40	& SUBS	
3	380-1	380-39	
2	380-12	& SUBS	
1	380-1-4, 6-9 & 11		
	SHIP	THRU	BLOCK
	EFFECTIVE ON		

AUDIO SYSTEM - PROVISIONS
(380-1 & Subs, 369 Cont Not Included)

© COPYRIGHT, 1981 BY ROCKWELL INTERNATIONAL

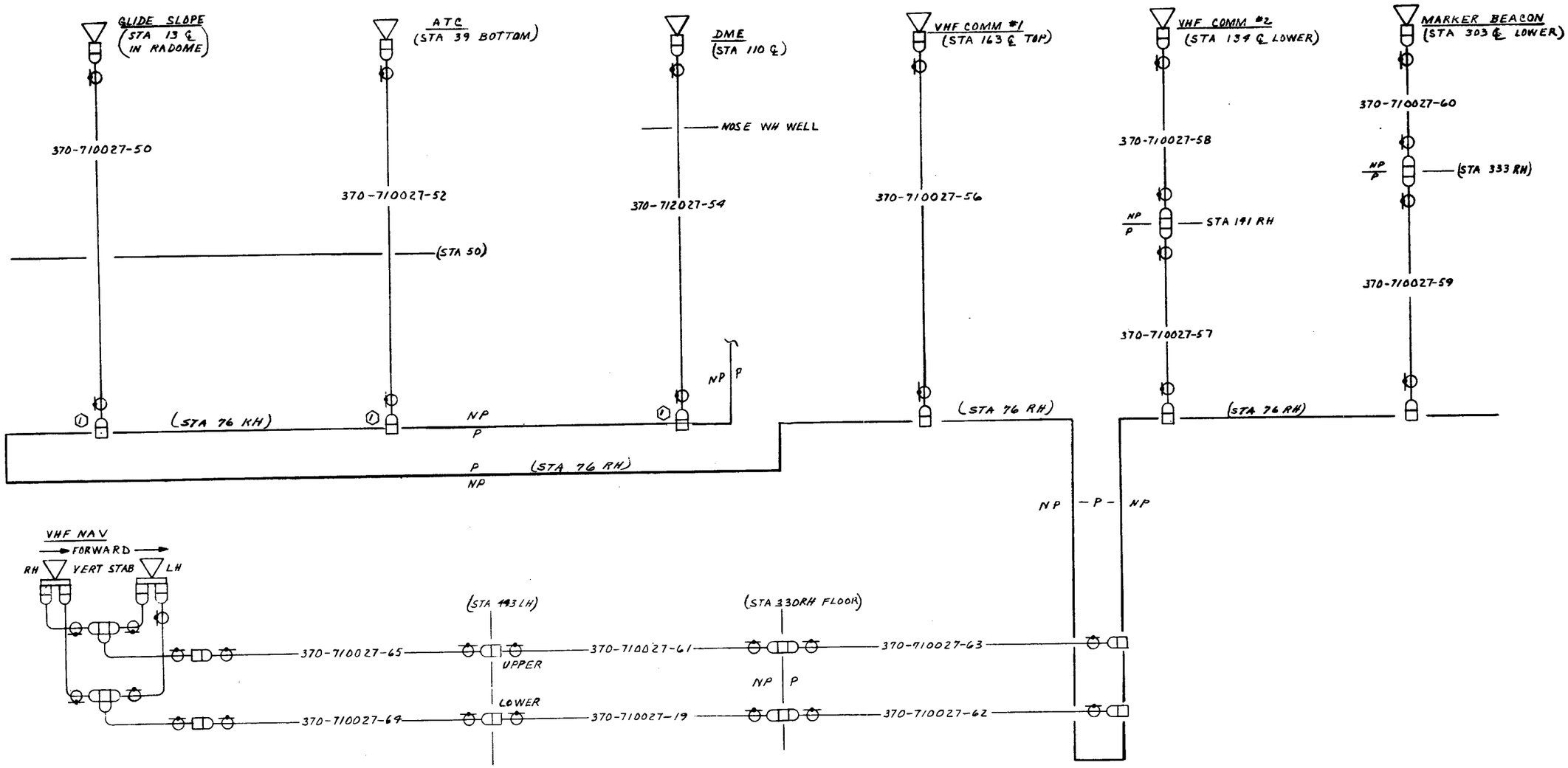

NOTES:
1. ① ATTACHED TO BULKHEAD FITTING FOR DELIVERY ONLY.

© COPYRIGHT, 1981 BY ROCKWELL INTERNATIONAL

CHAPTER 24

ELECTRICAL POWER

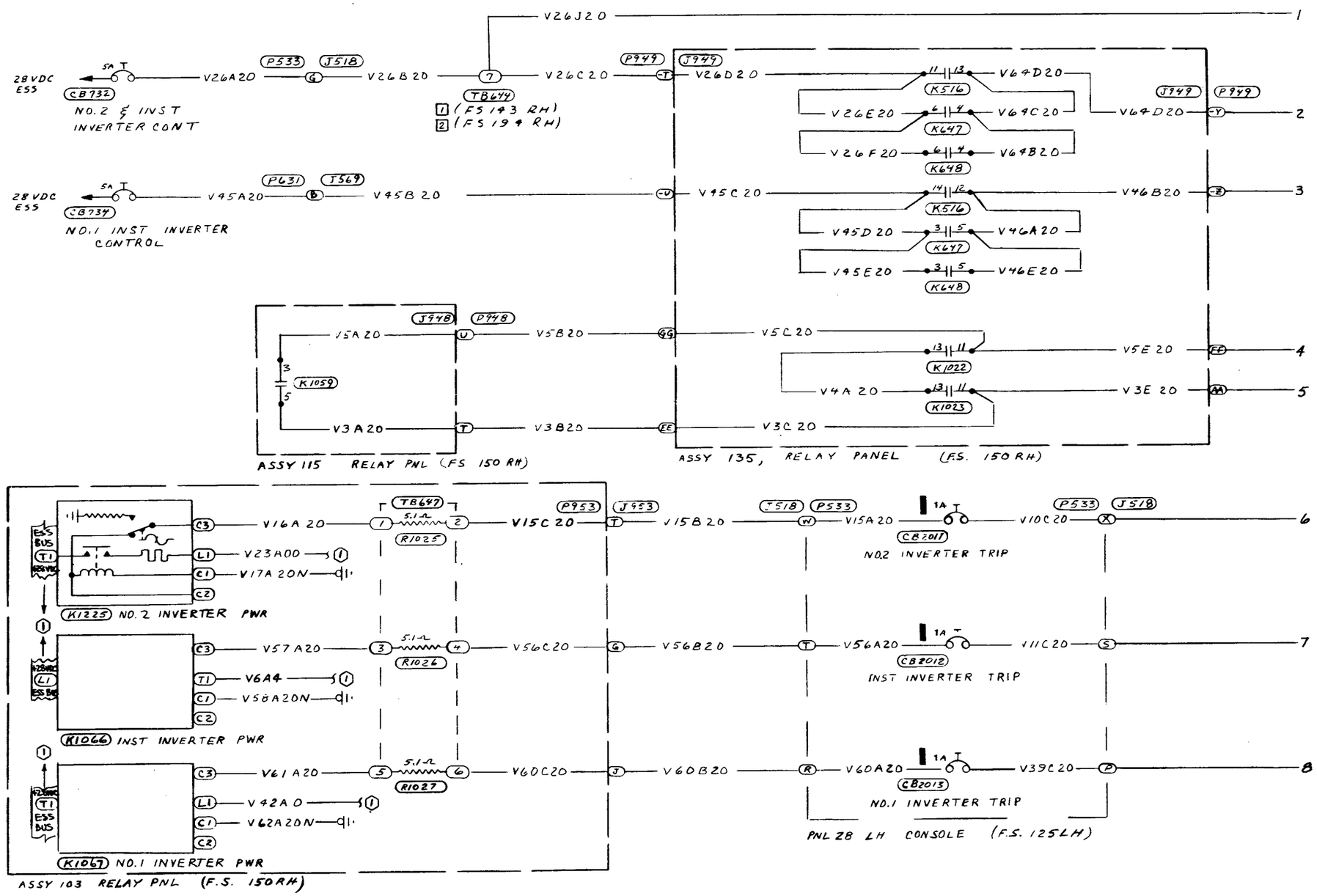

NOTES/LEGEND

1. B8.1-2 AC inverter sys

EFFECTIVITY

1 S/N 380-1 thru -4, -6 thru -9 and -11
2 S/N 380-12 and Subs

AC INVERTER SYSTEM
(S/N 380-1 and Subs, 369 Cont Not Included)
(Sheet 1 of 4)

B8.1-1

© COPYRIGHT, 1983 BY ROCKWELL INTERNATIONAL

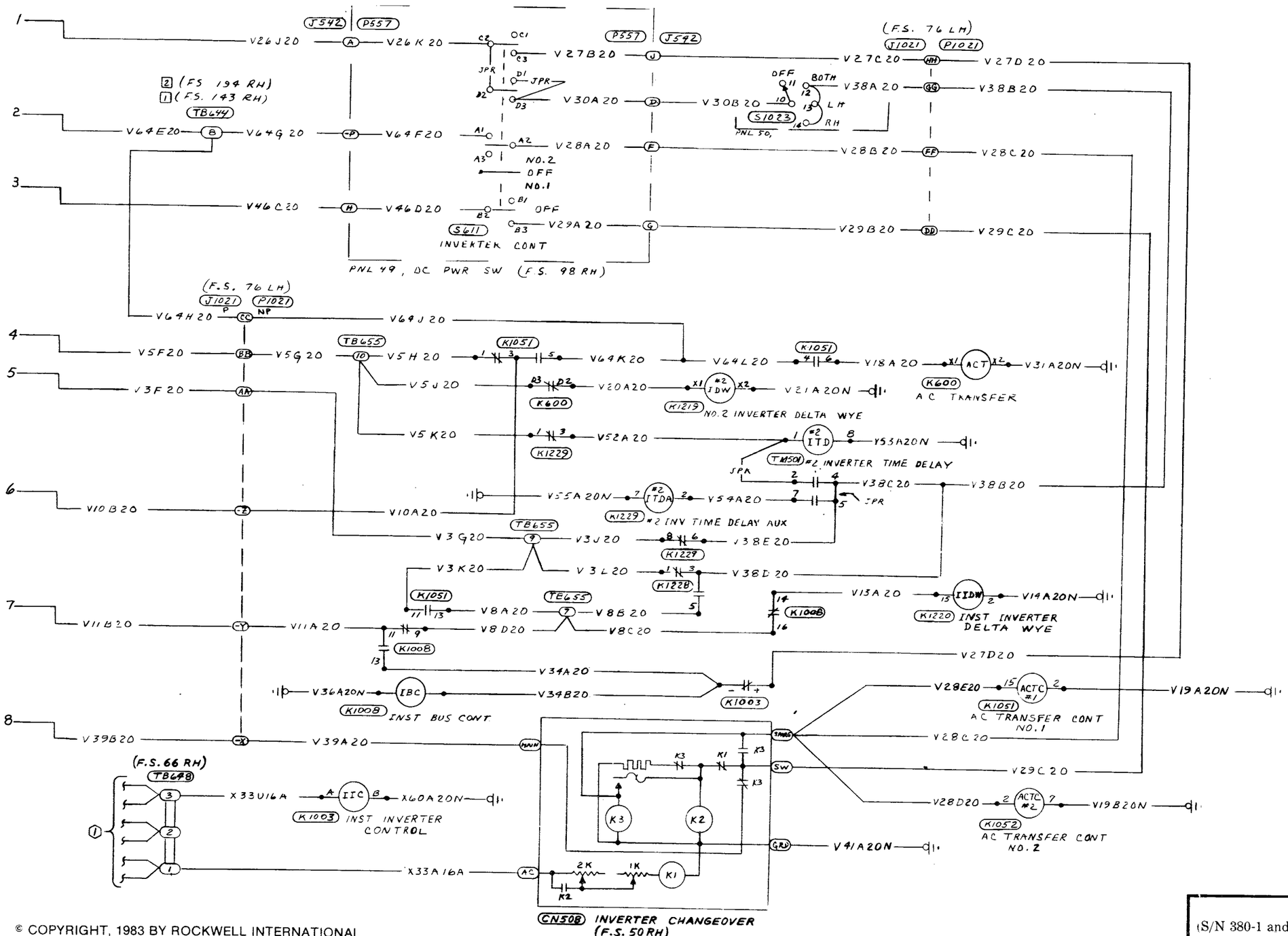

© COPYRIGHT, 1983 BY ROCKWELL INTERNATIONAL

AC INVERTER SYSTEM
(S/N 380-1 and Subs, 369 Cont Not Included)
(Sheet 2 of 4)

B8.1-1

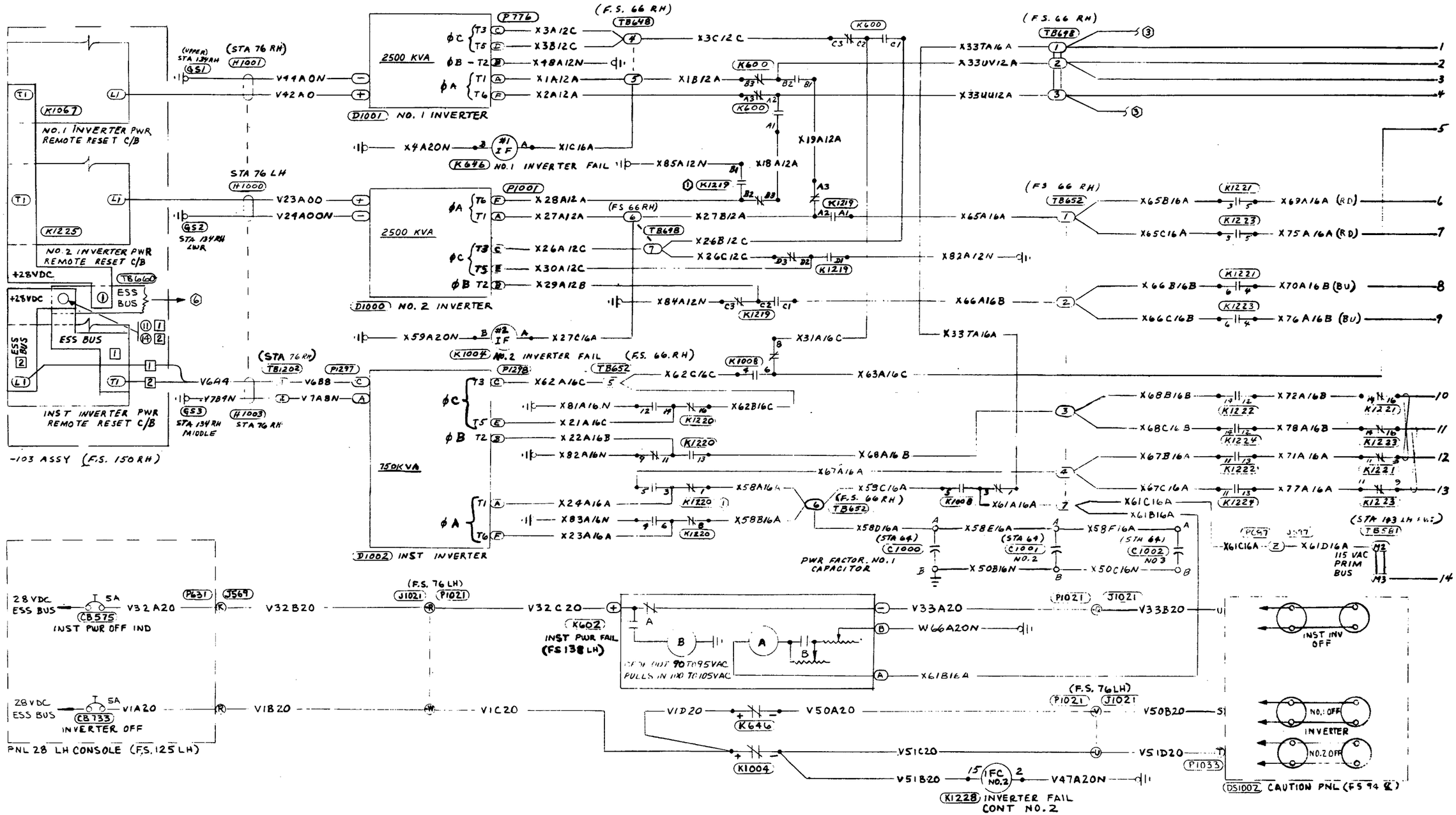

AC INVERTER SYSTEM
(380-1 & Subs, 369 Cont Not Included)
(Sheet 3 of 4)

© COPYRIGHT, 1981 BY ROCKWELL INTERNATIONAL

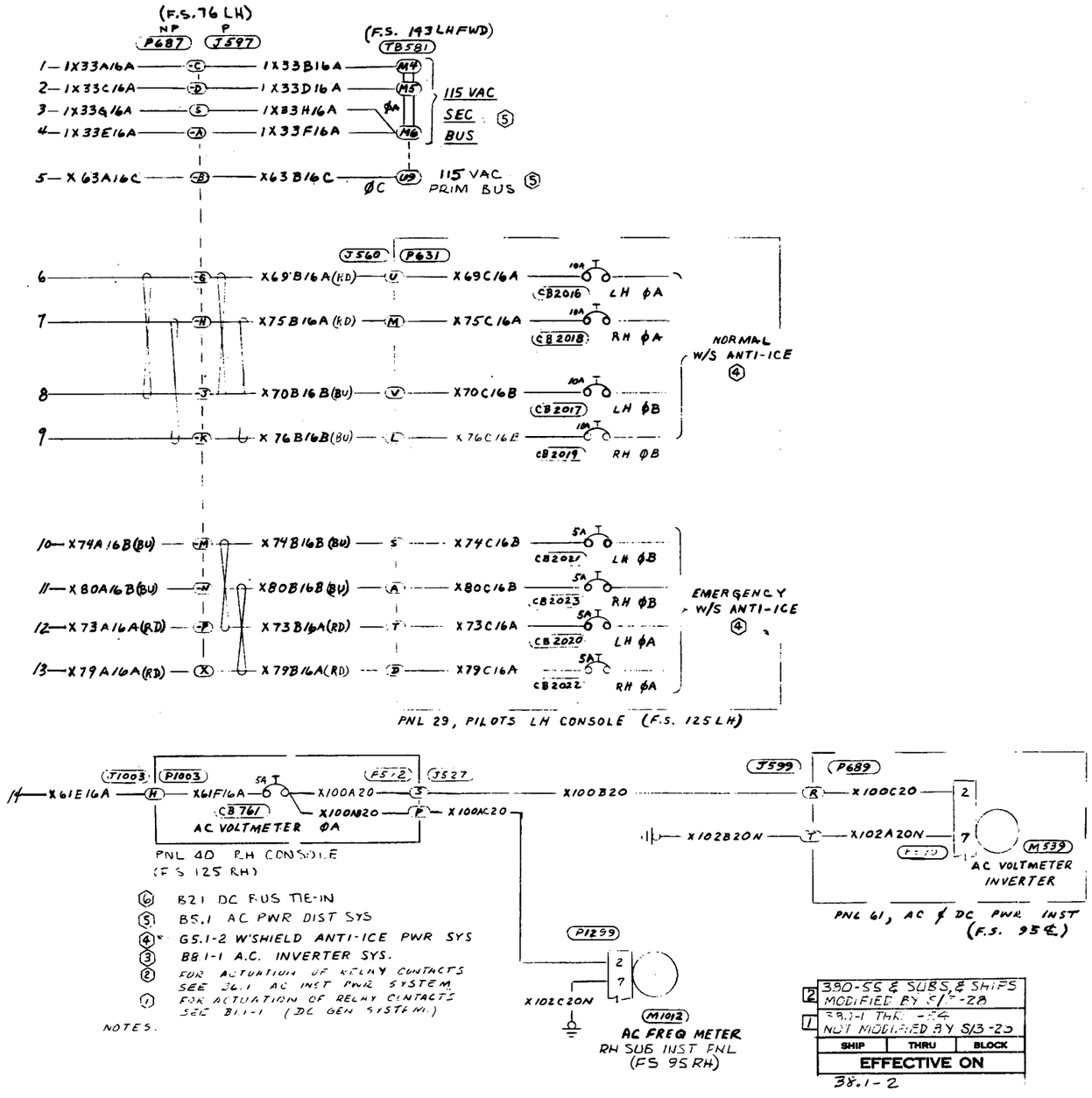

AC INVERTER SYSTEM
(380-2 & Subs, 369 Cont Not Included)
(Sheet 4 of 4)

© COPYRIGHT, 1981 BY ROCKWELL INTERNATIONAL

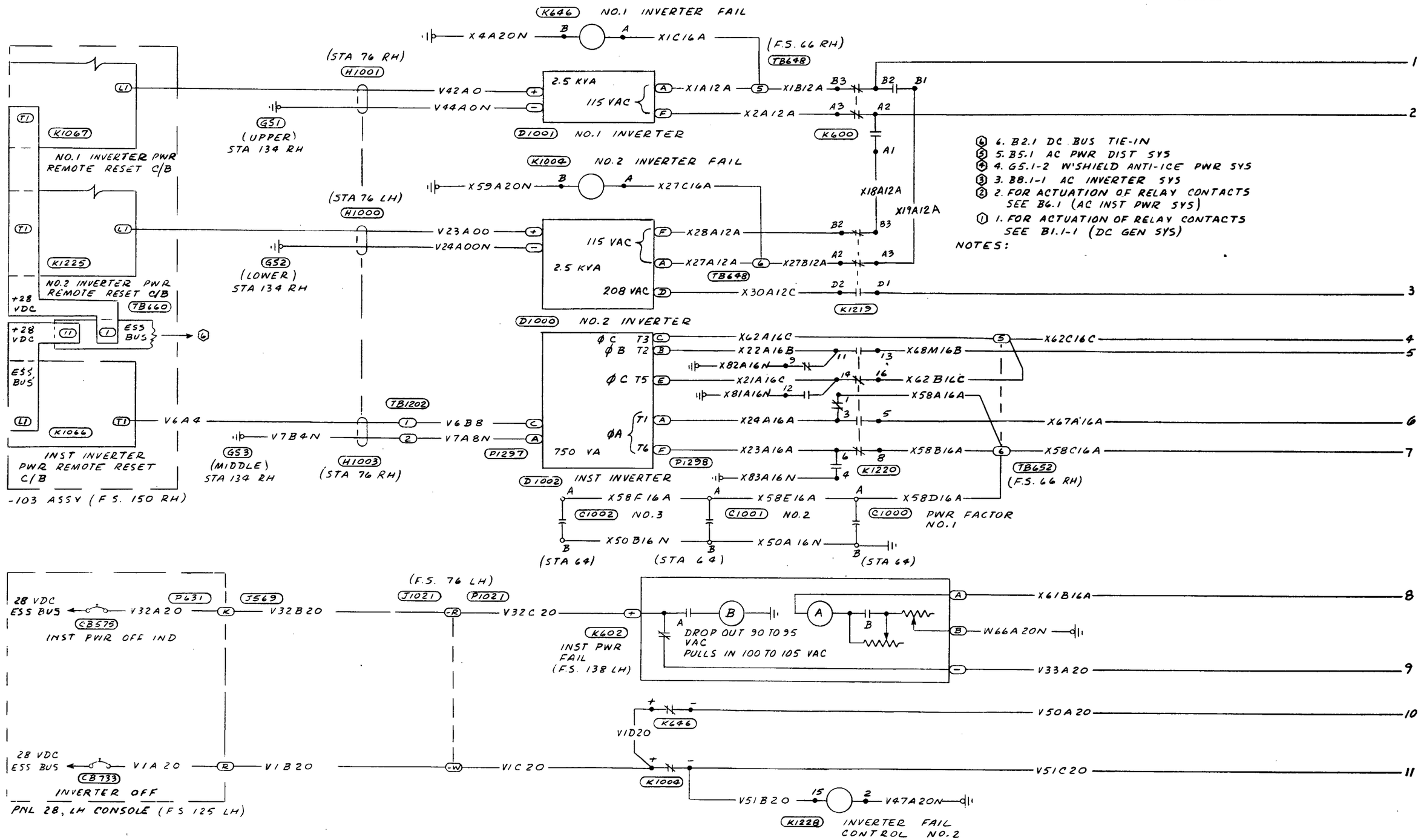

AC INVERTER SYS SOLID STATE INVERTER
(380-4, -6, -8, -9 & -11)
(Sheet 1 of 3)

© COPYRIGHT, 1981 BY ROCKWELL INTERNATIONAL

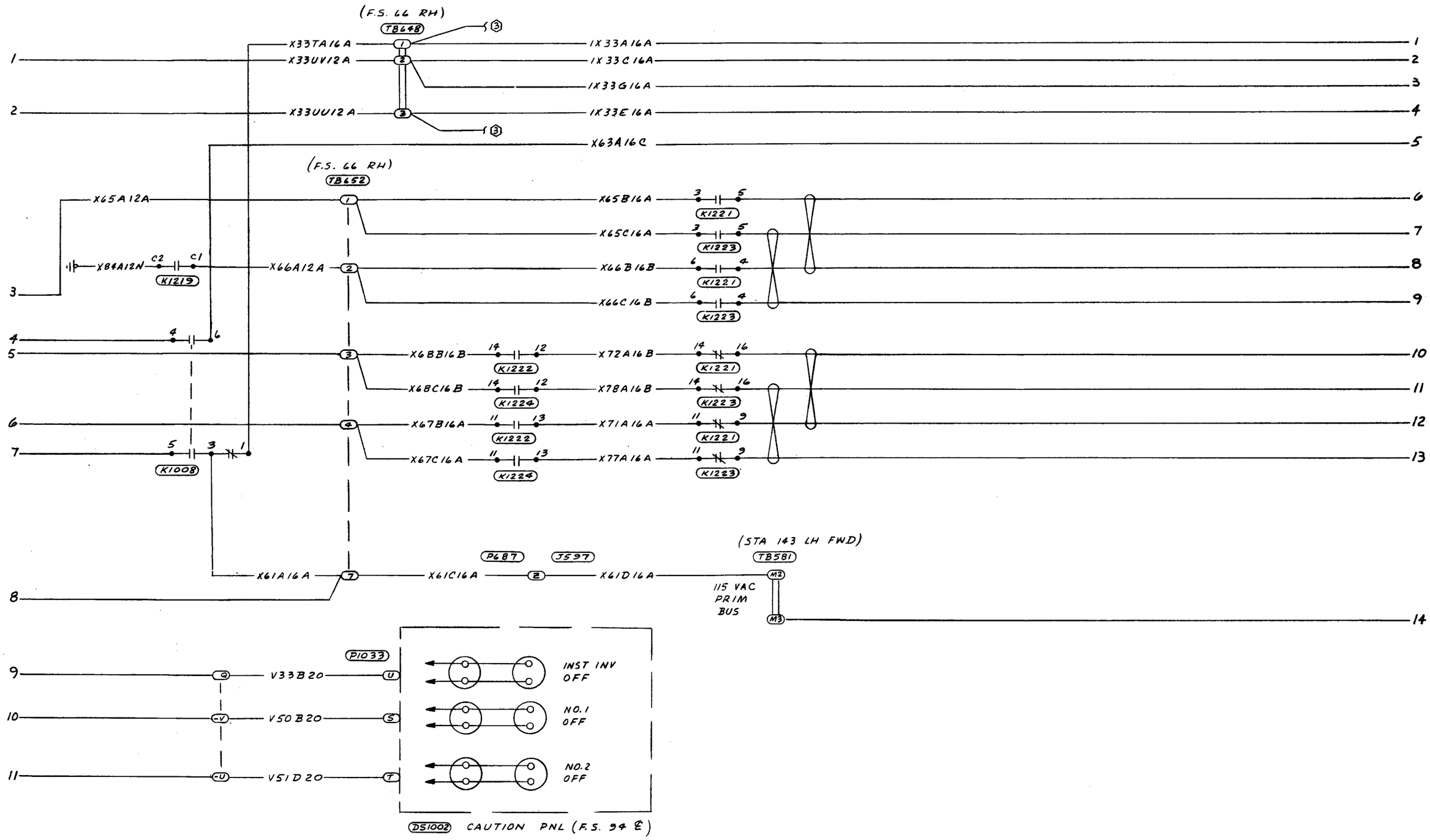

AC INVERTER SYS SOLID STATE INVERTER
(380-4, -6, -8, -9 & -11)
(Sheet 2 of 3)

© COPYRIGHT, 1981 BY ROCKWELL INTERNATIONAL

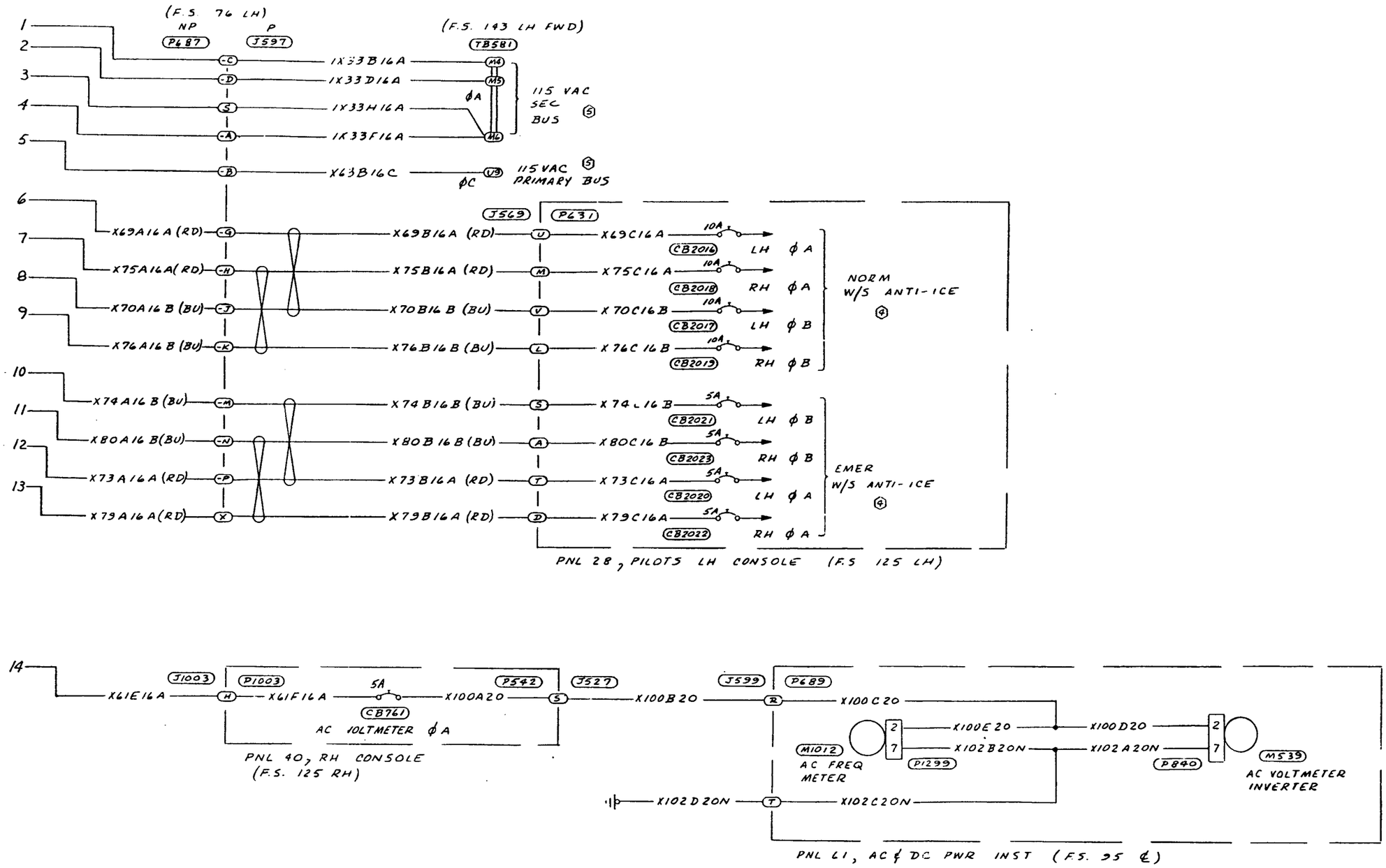

AC INVERTER SYS SOLID STATE INVERTER
(380-4, -6, -8, -9 & -11)
(Sheet 3 of 3)

© COPYRIGHT, 1981 BY ROCKWELL INTERNATIONAL

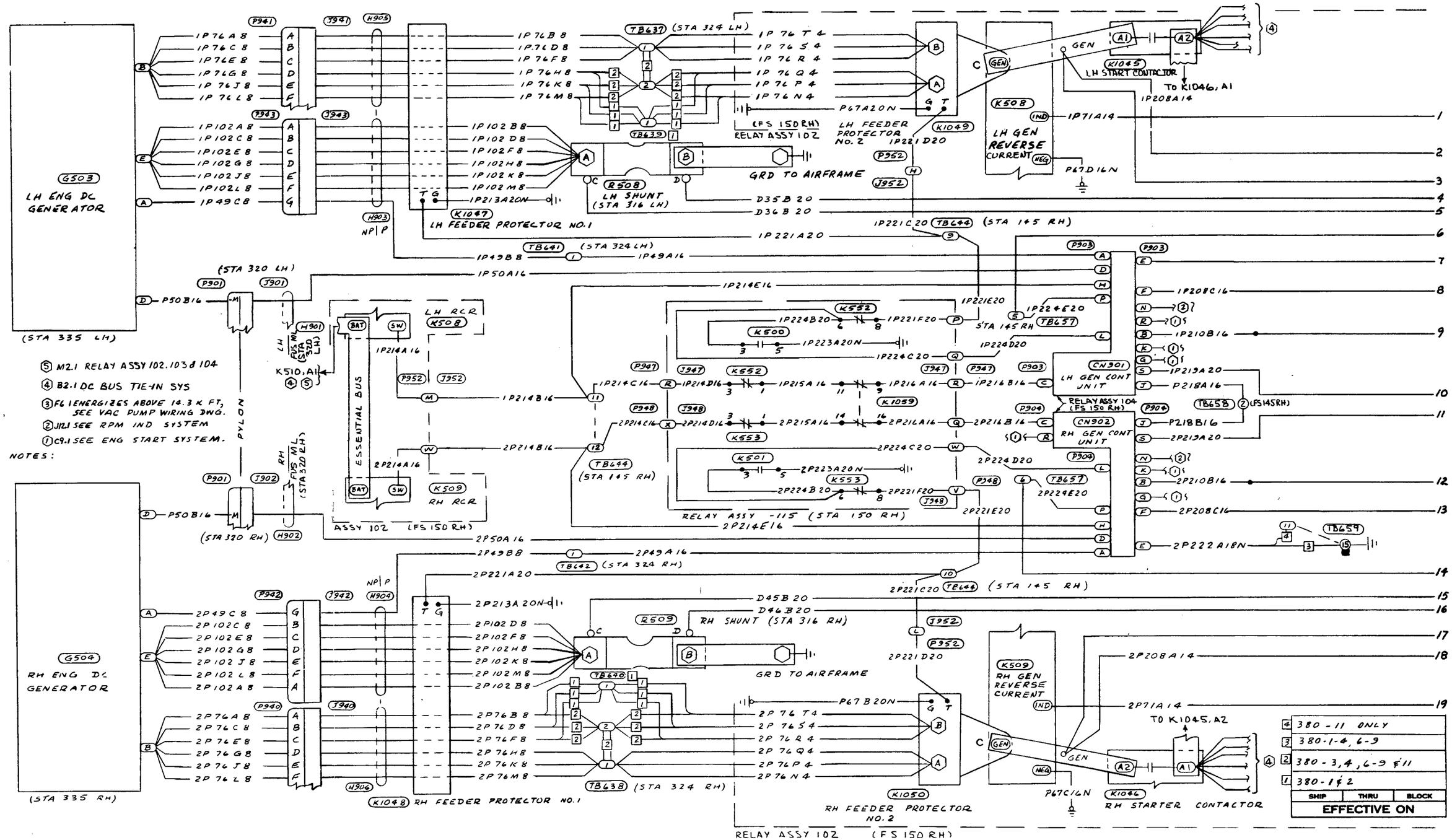

DC GENERATOR SYSTEM
(380-1 Thru -4, -6 Thru -9, & -11)
(Sheet 1 of 2)

© COPYRIGHT, 1981 BY ROCKWELL INTERNATIONAL

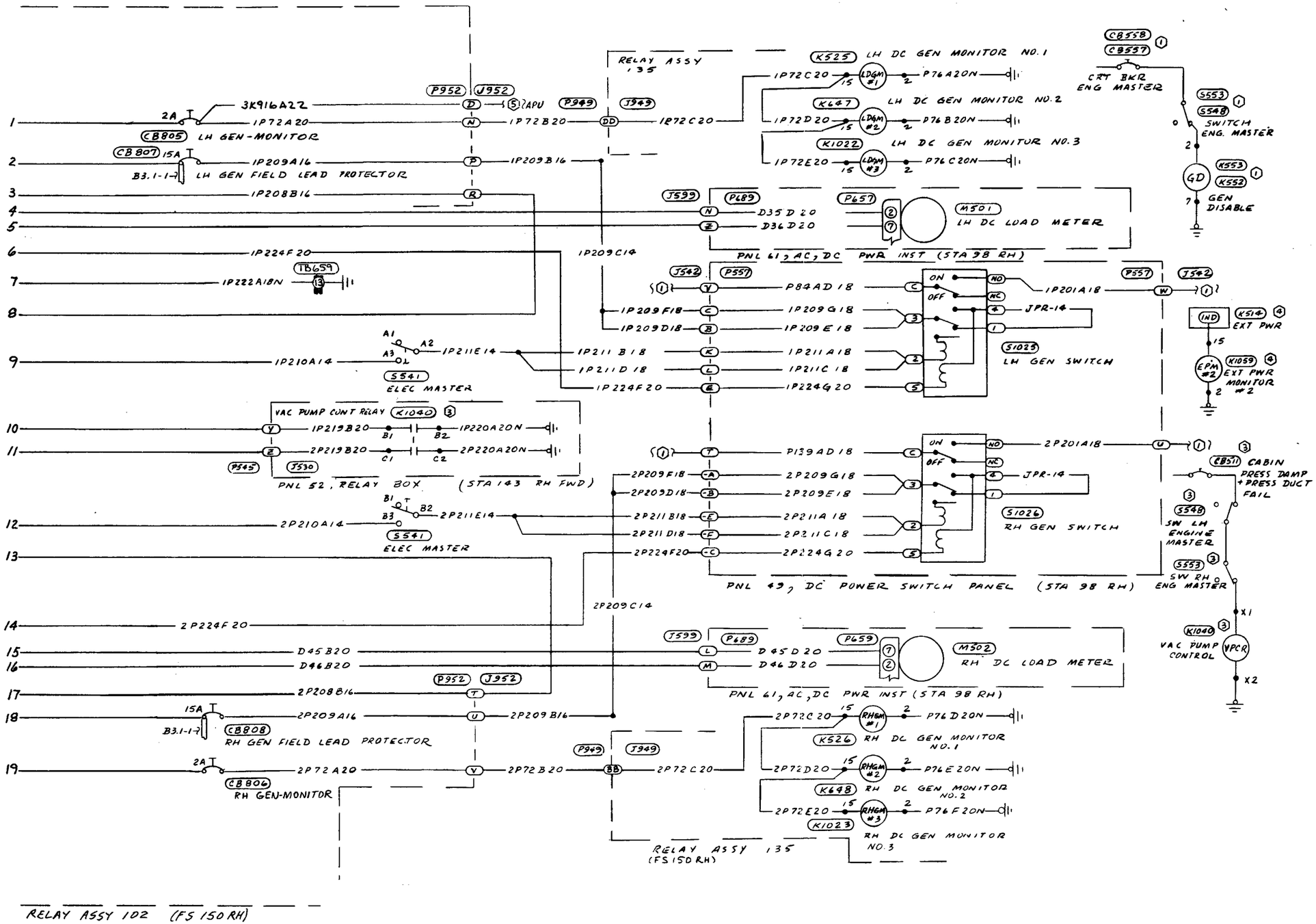

DC GENERATOR SYSTEM
(380-1 Thru -4, -6 Thru -9, & -11)
(Sheet 2 of 2)

© COPYRIGHT, 1981 BY ROCKWELL INTERNATIONAL

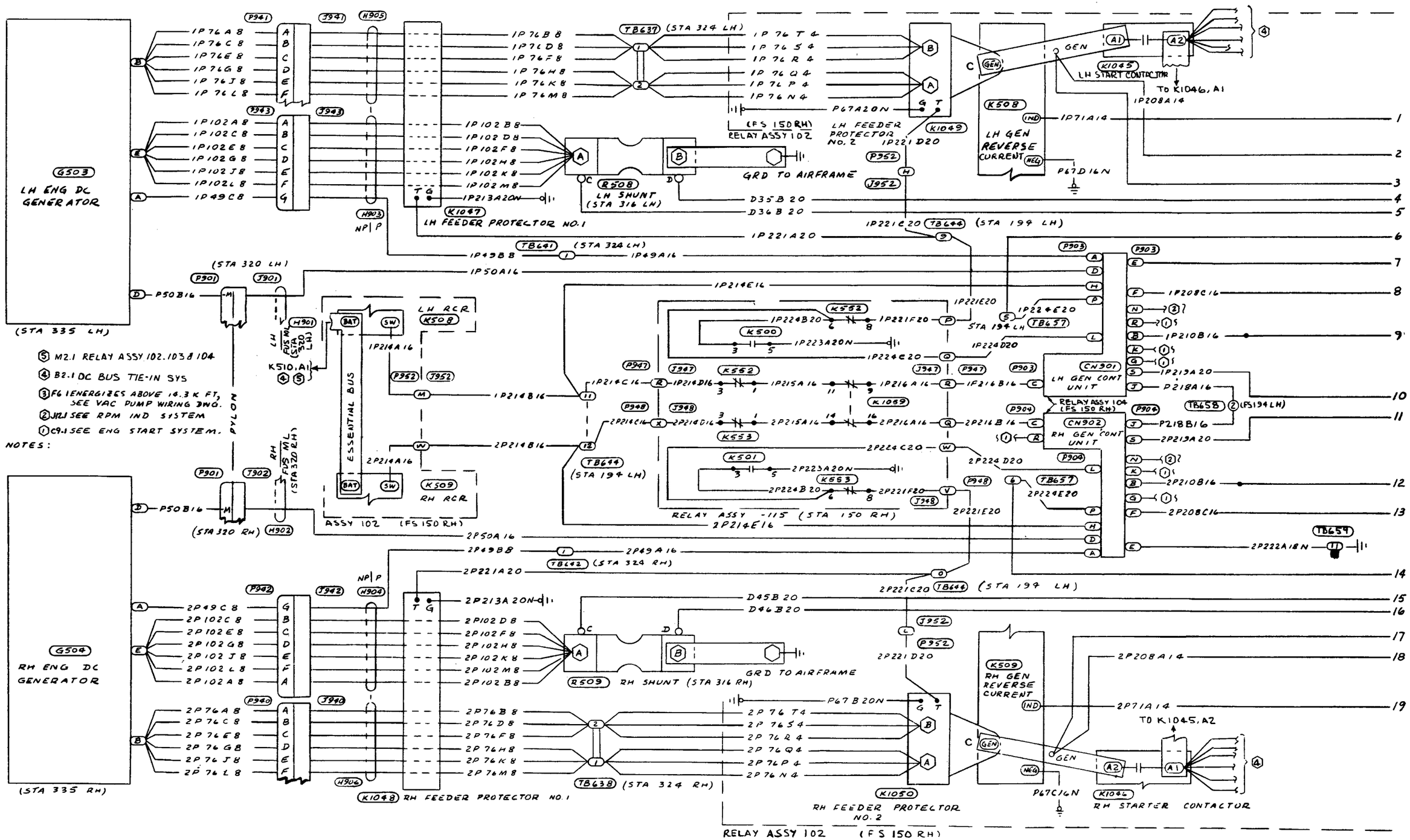

NOTES:

5. M2.1 RELAY ASSY 102, 103 & 104
4. B2.1 DC BUS TIE-IN SYS
3. F6.1 ENERGIZES ABOVE 16.3 K FT, SEE VAC PUMP WIRING DWG.
2. J11.1 SEE RPM IND SYSTEM
1. C9.1 SEE ENG START SYSTEM.

DC GENERATOR SYSTEM
(380-5, -10, -12 & Subs)
(Sheet 1 of 2)

© COPYRIGHT, 1981 BY ROCKWELL INTERNATIONAL

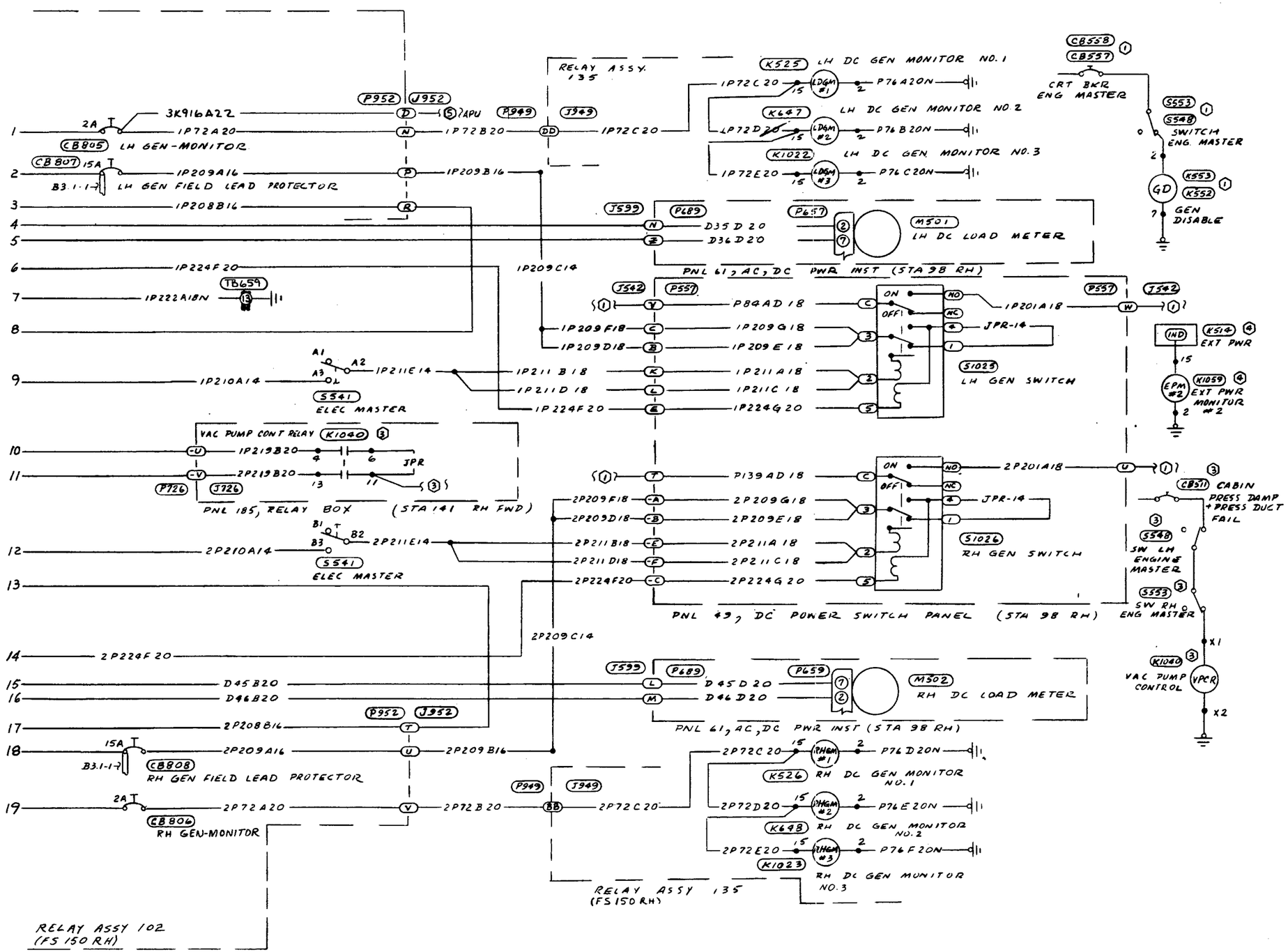

DC GENERATOR SYSTEM
(380-5, -10, -12 & Subs)
(Sheet 2 of 2)

© COPYRIGHT, 1981 BY ROCKWELL INTERNATIONAL

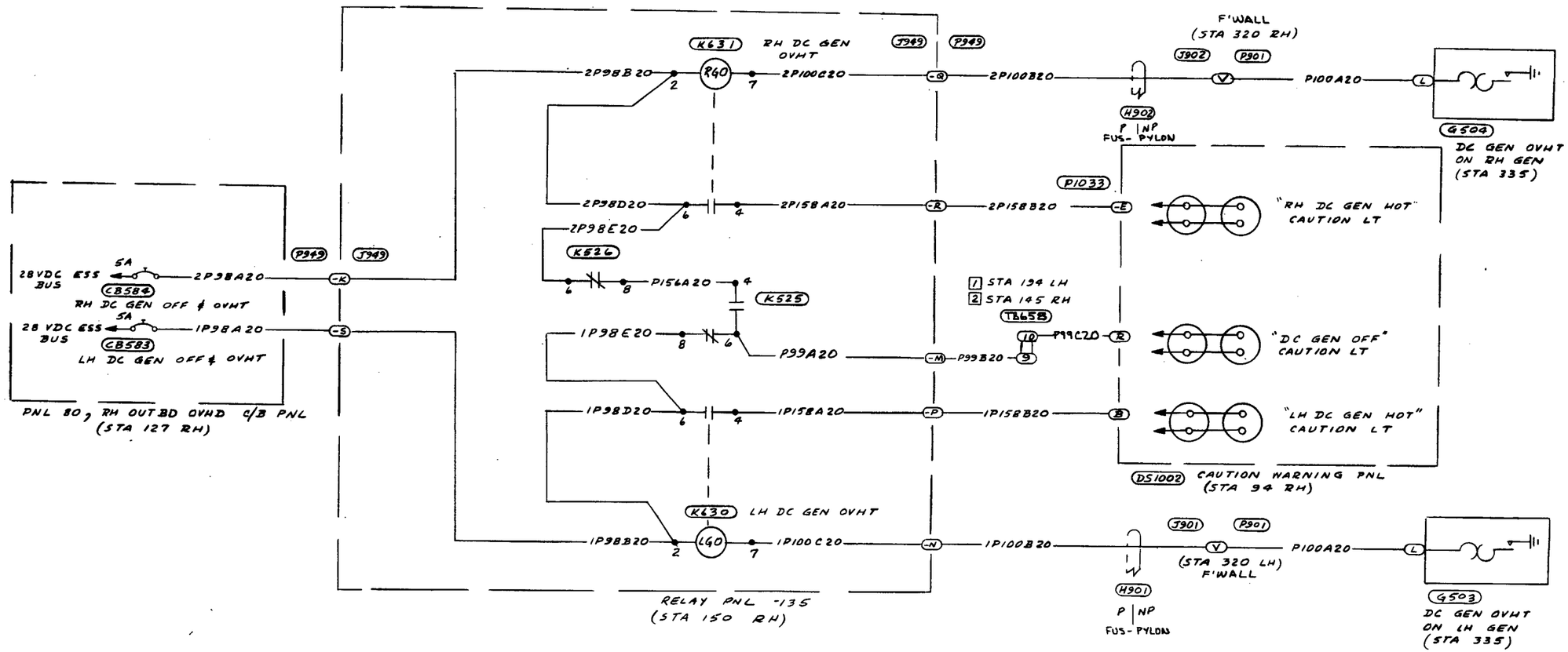

2	380-1 THRU 6-9 & 11		
1	380-5,10, 12 & SUBS		
SHIP	THRU	BLOCK	
EFFECTIVE ON			

© COPYRIGHT, 1981 BY ROCKWELL INTERNATIONAL

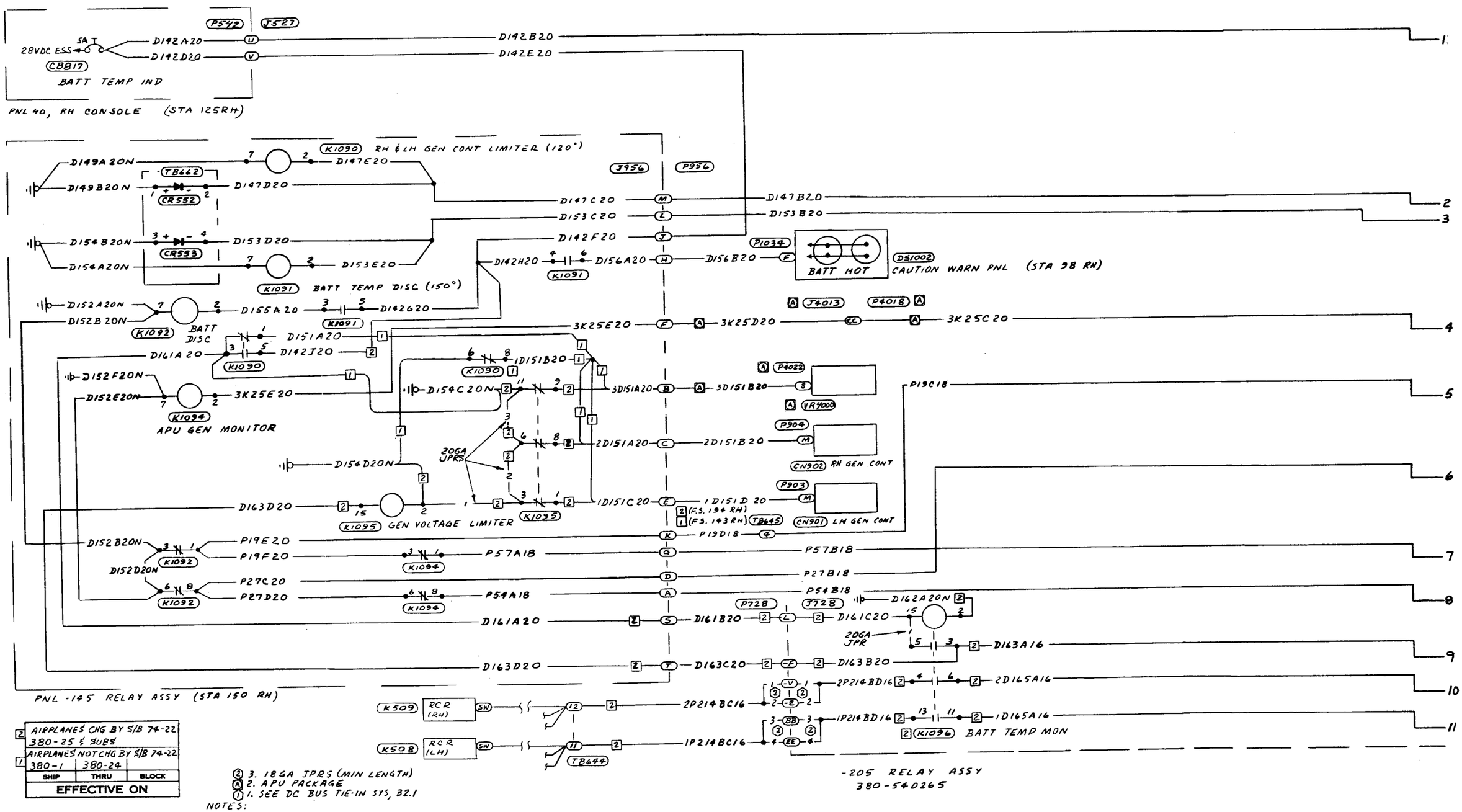

BATTERY TEMP IND AND CONTROL
(NA 265-80 Contract, 369 Cont Not Included)
(Sheet 1 of 2)

© COPYRIGHT, 1981 BY ROCKWELL INTERNATIONAL

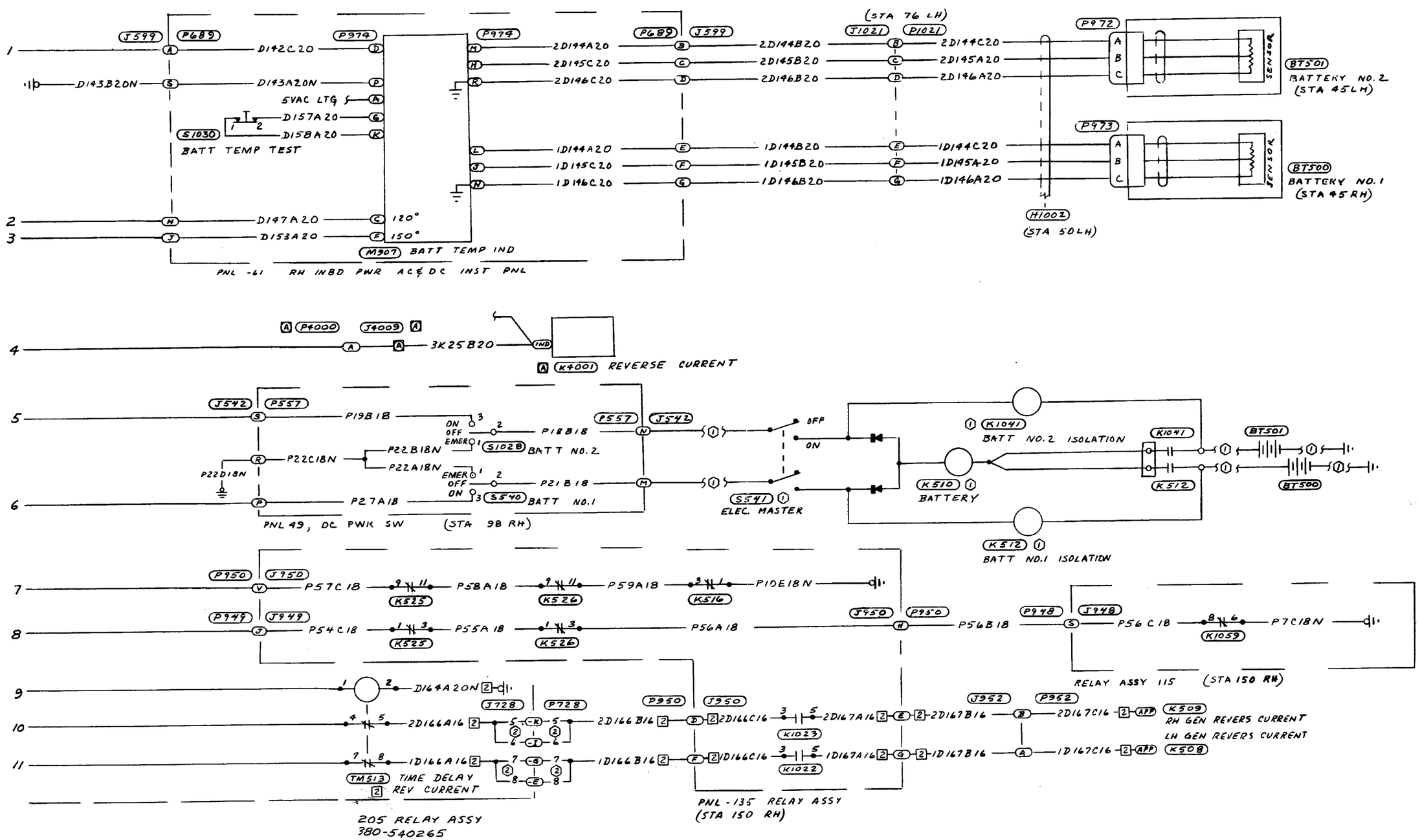

BATTER TEMP IND AND CONTROL
(NA 265-80 Contract, 369 Cont Not Included)
(Sheet 2 of 2)

© COPYRIGHT, 1981 BY ROCKWELL INTERNATIONAL

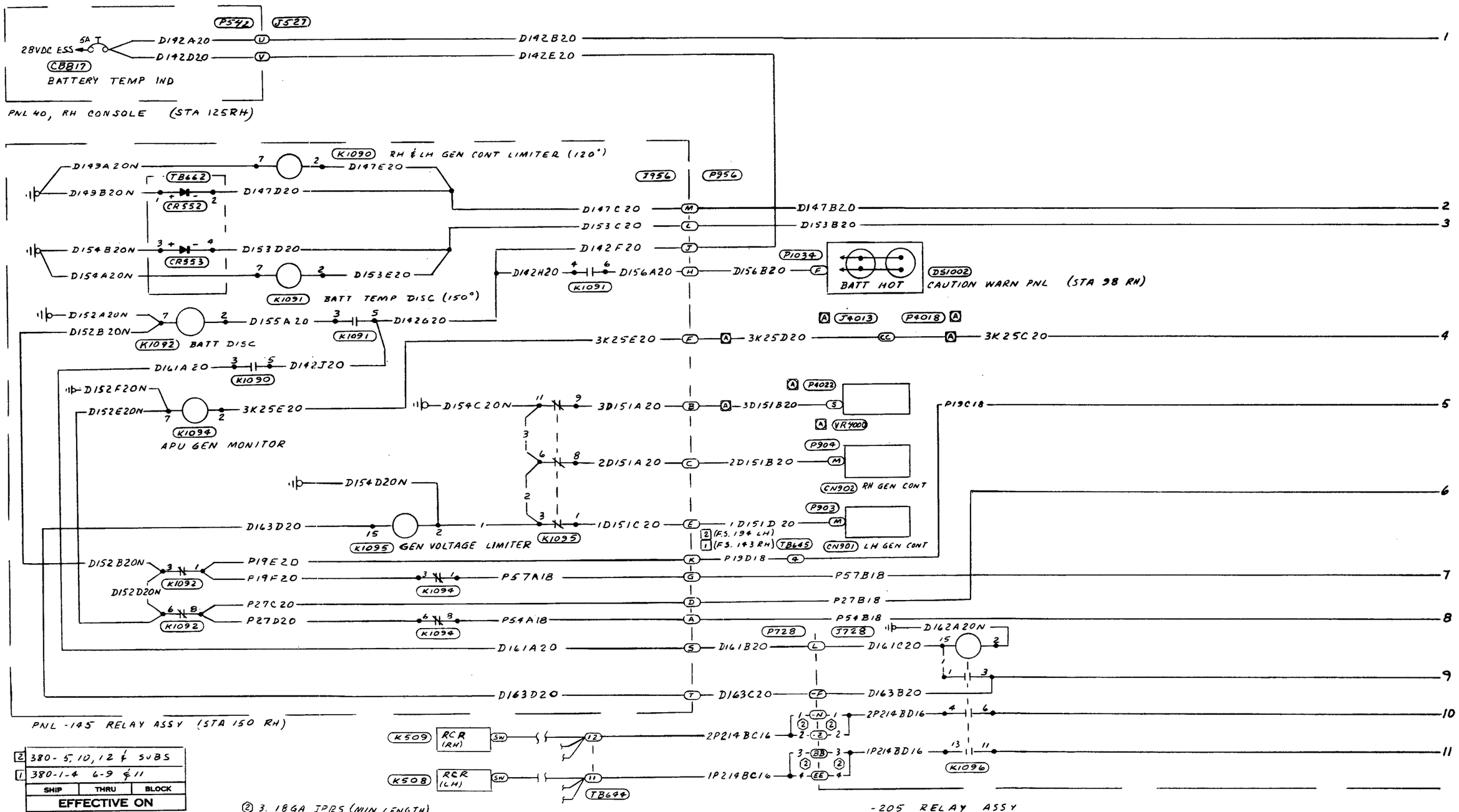

BATTERY TEMP IND AND CONTROL
(NA 265-80 Contract, 369 Cont Not Included)
(Sheet 1 of 2)

© COPYRIGHT, 1981 BY ROCKWELL INTERNATIONAL

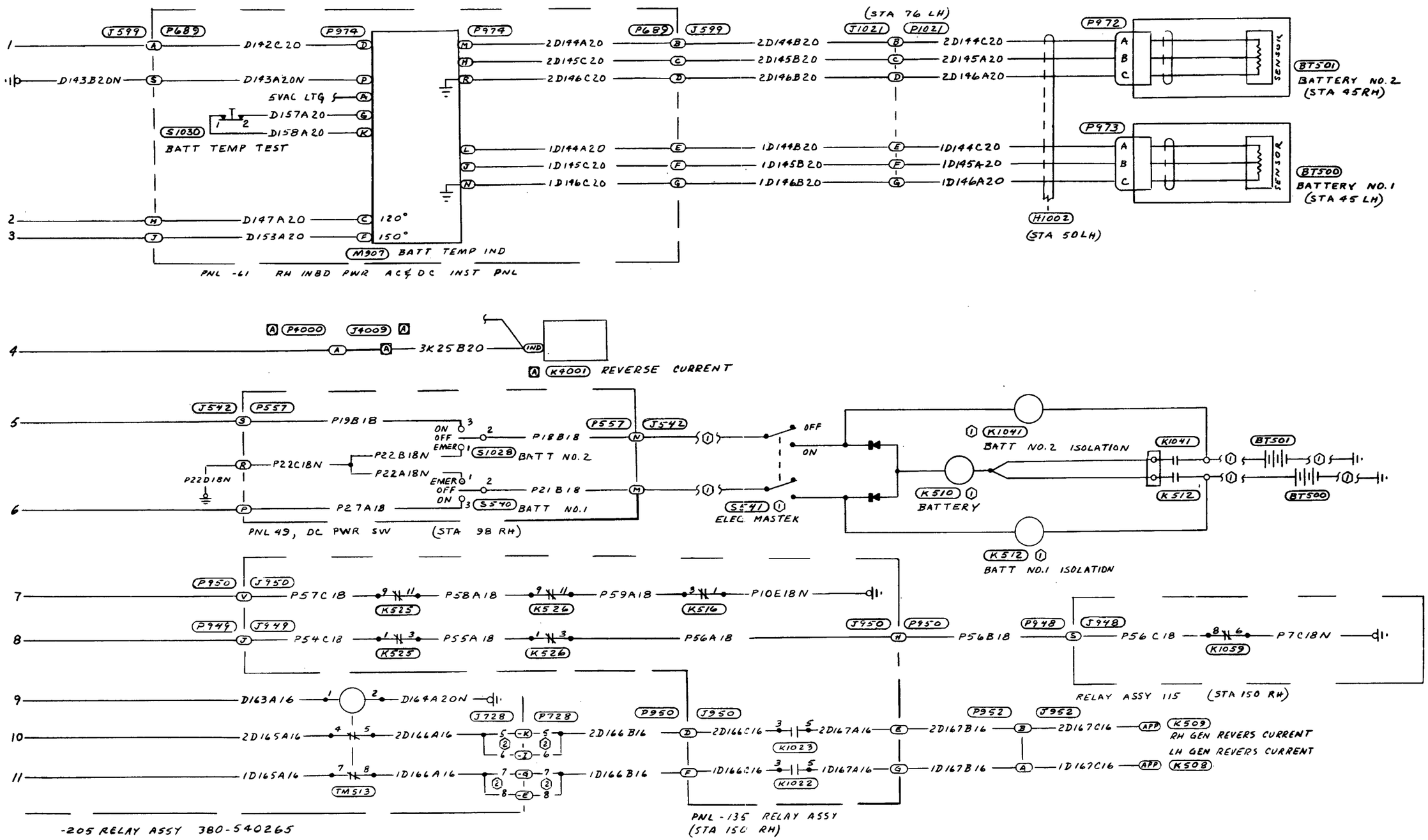

BATTERY TEMP IND AND CONTROL
(NA 265-80 Contract, 369 Cont Not Included)
(Sheet 2 of 2)

© COPYRIGHT, 1981 BY ROCKWELL INTERNATIONAL

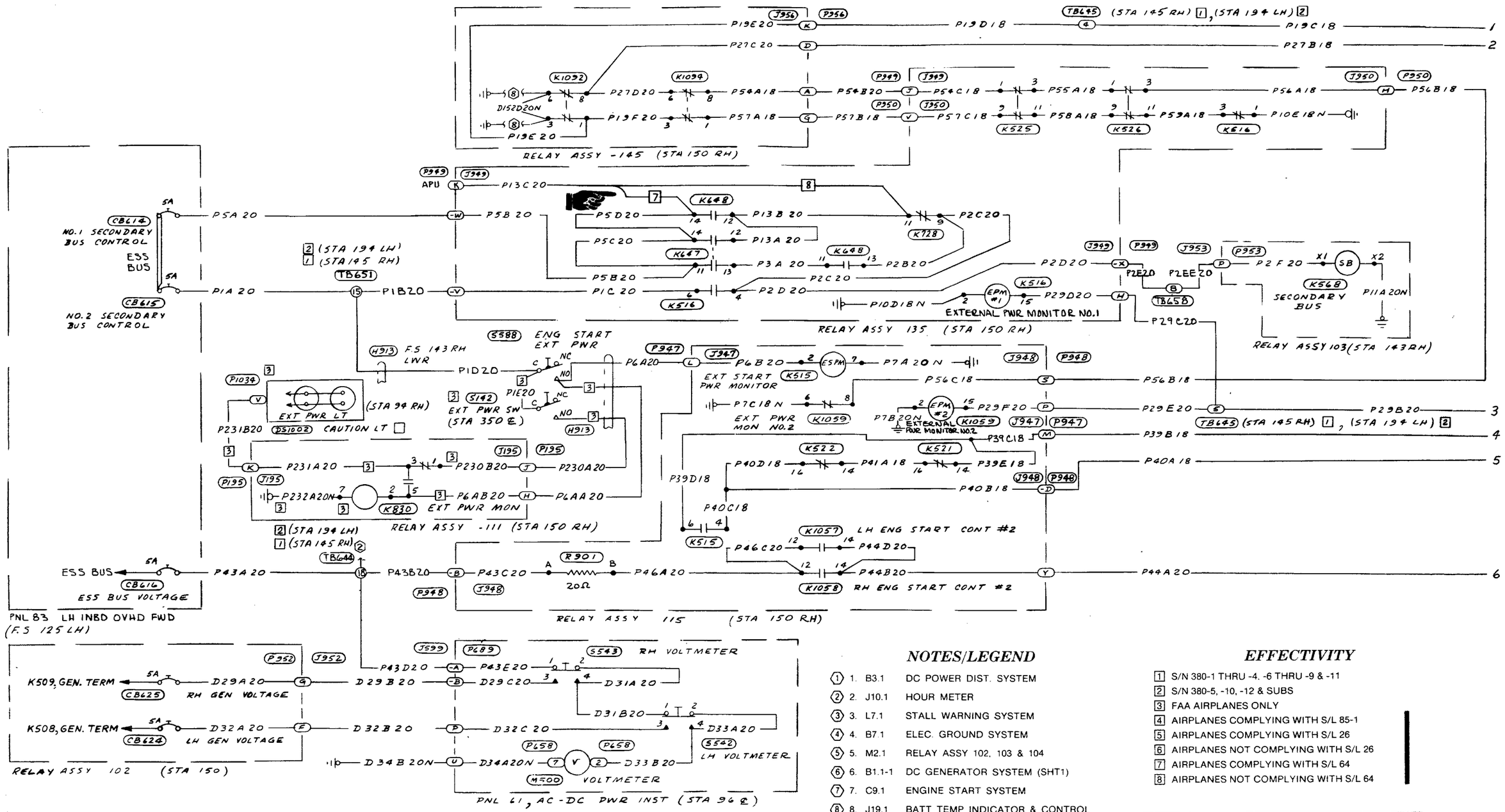

NOTES/LEGEND

1. B3.1 DC POWER DIST. SYSTEM
2. J10.1 HOUR METER
3. L7.1 STALL WARNING SYSTEM
4. B7.1 ELEC. GROUND SYSTEM
5. M2.1 RELAY ASSY 102, 103 & 104
6. B1.1-1 DC GENERATOR SYSTEM (SHT1)
7. C9.1 ENGINE START SYSTEM
8. J19.1 BATT TEMP INDICATOR & CONTROL

EFFECTIVITY

1. S/N 380-1 THRU -4, -6 THRU -9 & -11
2. S/N 380-5, -10, -12 & SUBS
3. FAA AIRPLANES ONLY
4. AIRPLANES COMPLYING WITH S/L 85-1
5. AIRPLANES COMPLYING WITH S/L 26
6. AIRPLANES NOT COMPLYING WITH S/L 26
7. AIRPLANES COMPLYING WITH S/L 64
8. AIRPLANES NOT COMPLYING WITH S/L 64

DC BUS TIE-IN SYSTEM
(S/N 380-1 & Subs Not changed by SOK 17)
(Sheet 1 of 3)

24-50-1
Page 1/2 Blank
Jan 16/86

© COPYRIGHT, 1986 BY SABRELINER CORPORATION

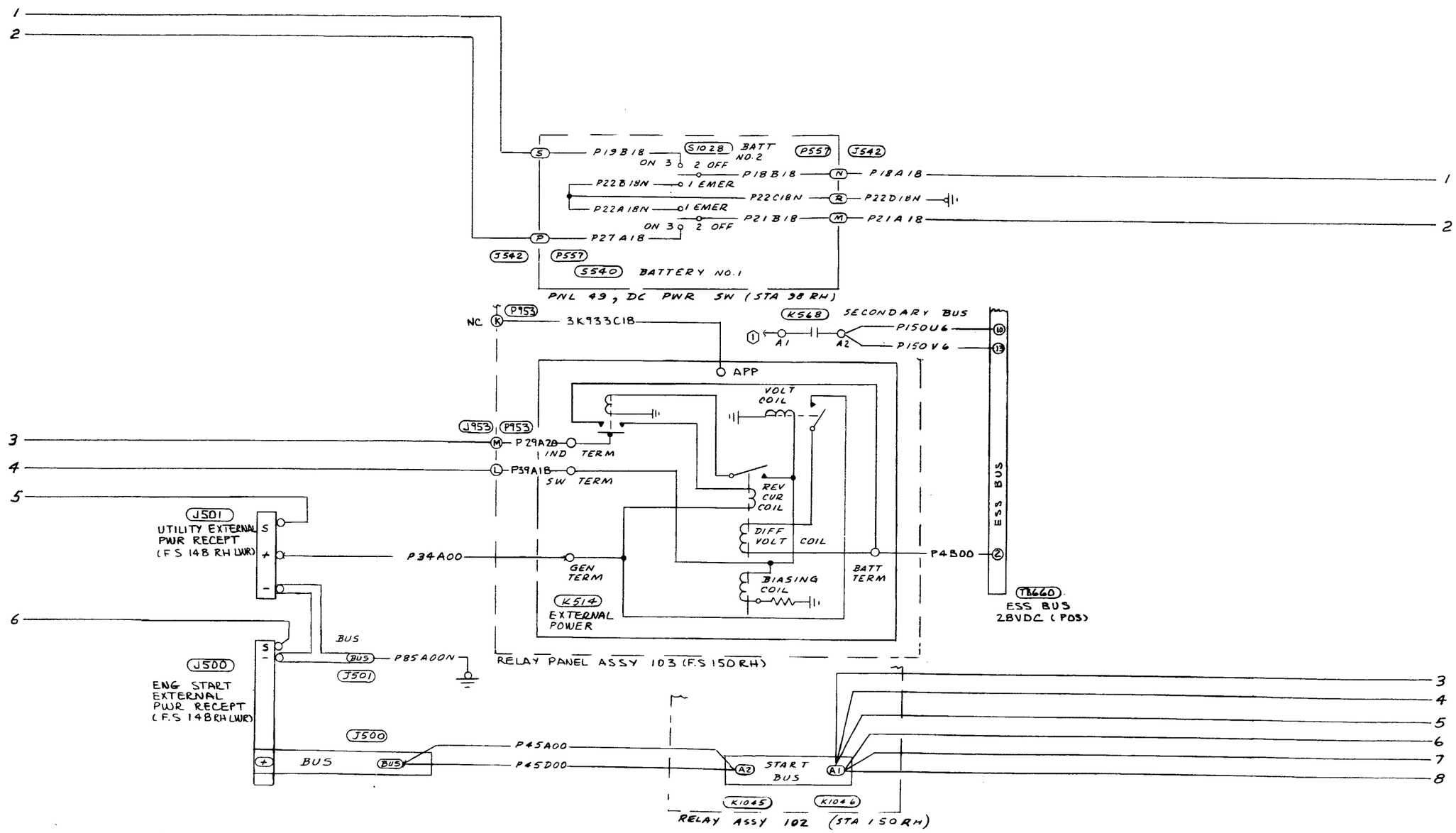

24-50-1

DC BUS TIE-IN SYSTEM
(S/N 380-1 & Subs Not Changed by SOK 17)
(Sheet 2 of 3)

© COPYRIGHT, 1986 BY SABRELINER CORPORATION

B2.1	8	7	6	5

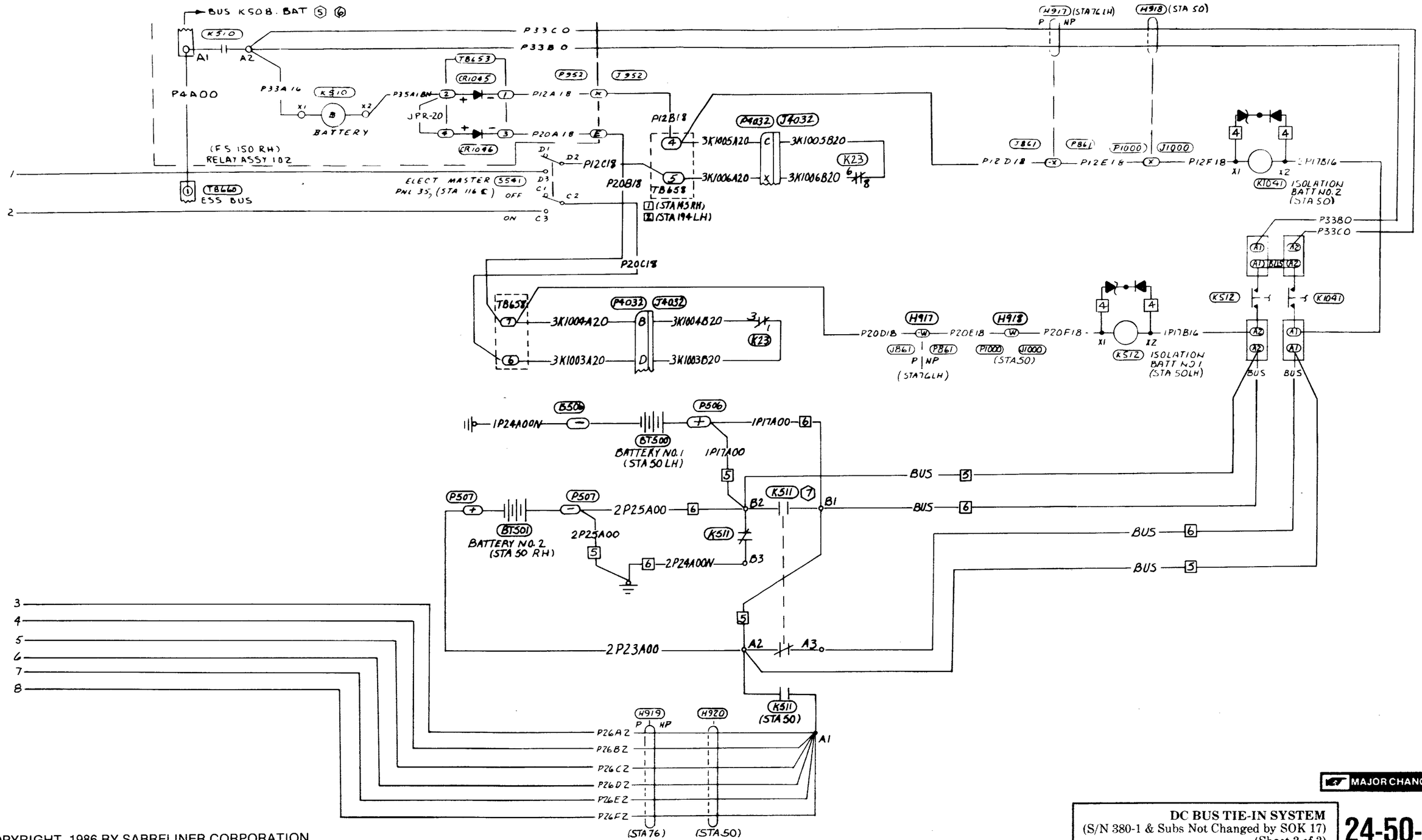

MAJOR CHANGE

© COPYRIGHT, 1986 BY SABRELINER CORPORATION

DC BUS TIE-IN SYSTEM
(S/N 380-1 & Subs Not Changed by SOK 17)
(Sheet 3 of 3)

24-50-1
Page 5/6 Blank
Jan 16/86

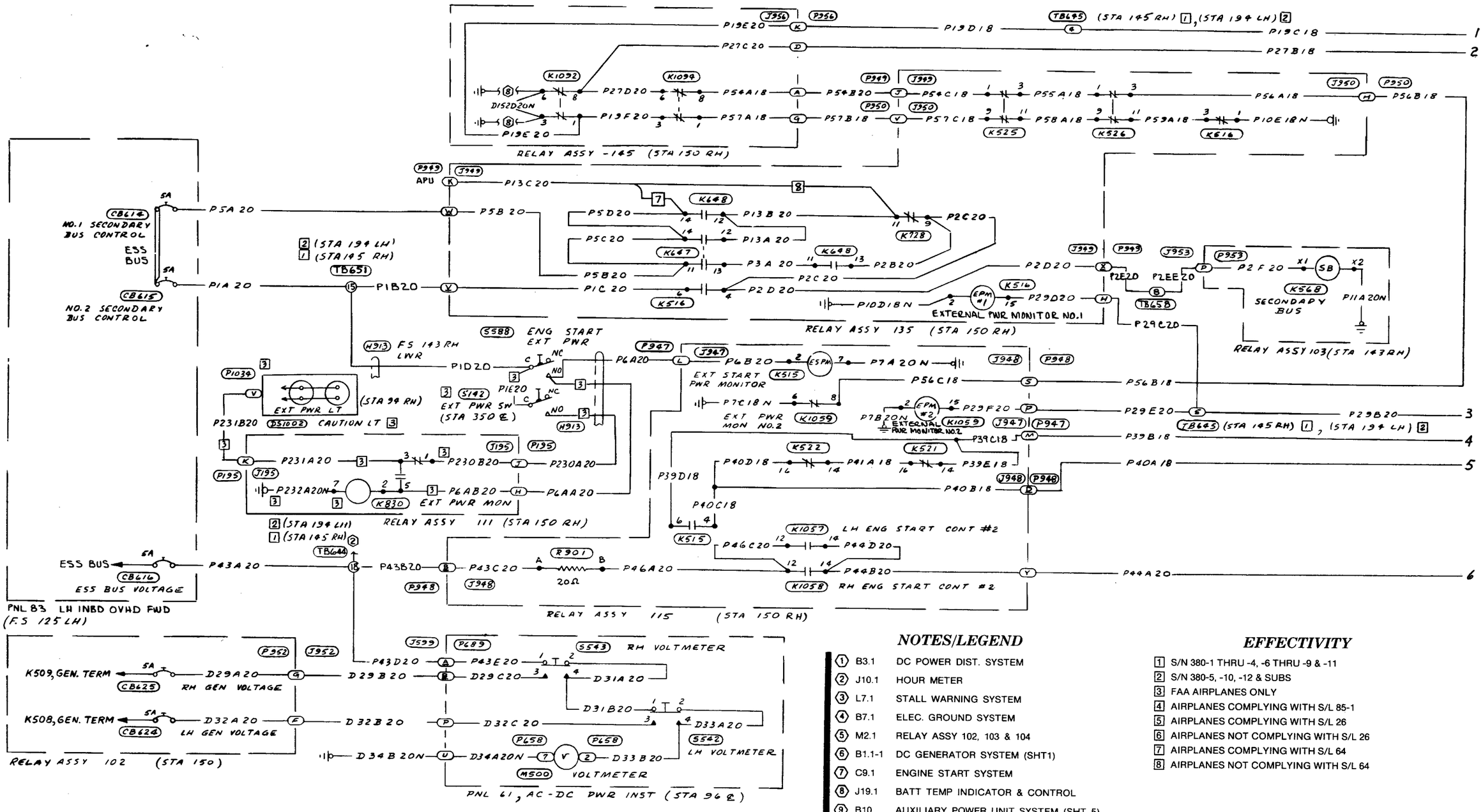

NOTES/LEGEND

1	B3.1	DC POWER DIST. SYSTEM
2	J10.1	HOUR METER
3	L7.1	STALL WARNING SYSTEM
4	B7.1	ELEC. GROUND SYSTEM
5	M2.1	RELAY ASSY 102, 103 & 104
6	B1.1-1	DC GENERATOR SYSTEM (SHT1)
7	C9.1	ENGINE START SYSTEM
8	J19.1	BATT TEMP INDICATOR & CONTROL
9	B10	AUXILIARY POWER UNIT SYSTEM (SHT 5)
10	B1.1	DC GENERATOR SYSTEM (SHT 2)

EFFECTIVITY

1. S/N 380-1 THRU -4, -6 THRU -9 & -11
2. S/N 380-5, -10, -12 & SUBS
3. FAA AIRPLANES ONLY
4. AIRPLANES COMPLYING WITH S/L 85-1
5. AIRPLANES COMPLYING WITH S/L 26
6. AIRPLANES NOT COMPLYING WITH S/L 26
7. AIRPLANES COMPLYING WITH S/L 64
8. AIRPLANES NOT COMPLYING WITH S/L 64

© COPYRIGHT, 1989 BY SABRELINER CORPORATION

DC BUS TIE-IN SYSTEM
S/N 380-1 & Subs Changed by SOK 17
(Sheet 1 of 3)

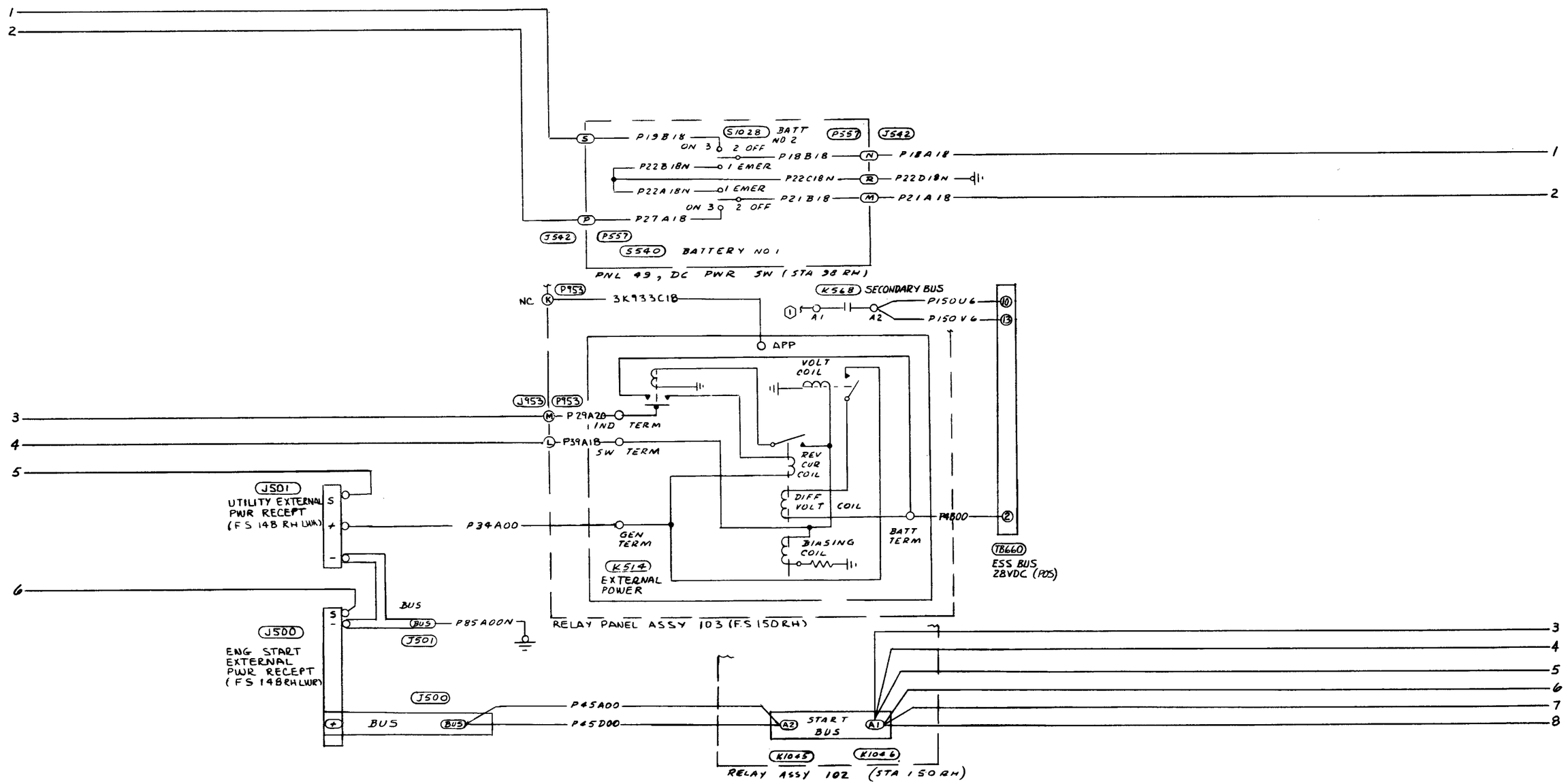

24-50-1
Page 9 Blank/10
May 31/89

DC BUS TIE-IN SYSTEM
S/N 380-1 & Subs Changed by SOK 17
(Sheet 2 of 3)

© COPYRIGHT, 1989 BY SABRELINER CORPORATION

B2.2	8	7	6	5

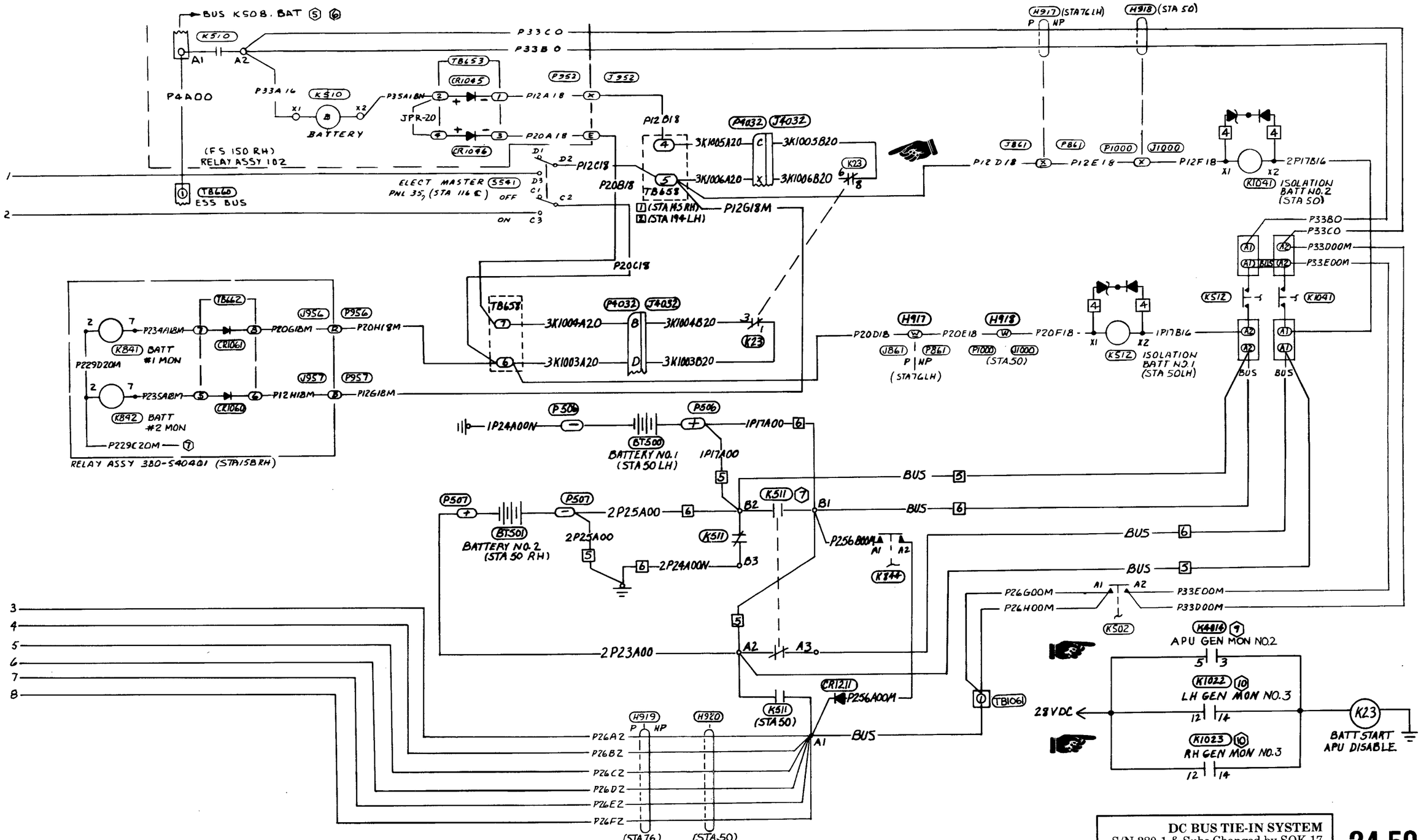

© COPYRIGHT, 1989 BY SABRELINER CORPORATION

DC BUS TIE-IN SYSTEM
S/N 380-1 & Subs Changed by SOK 17
(Sheet 3 of 3)

C

B

A

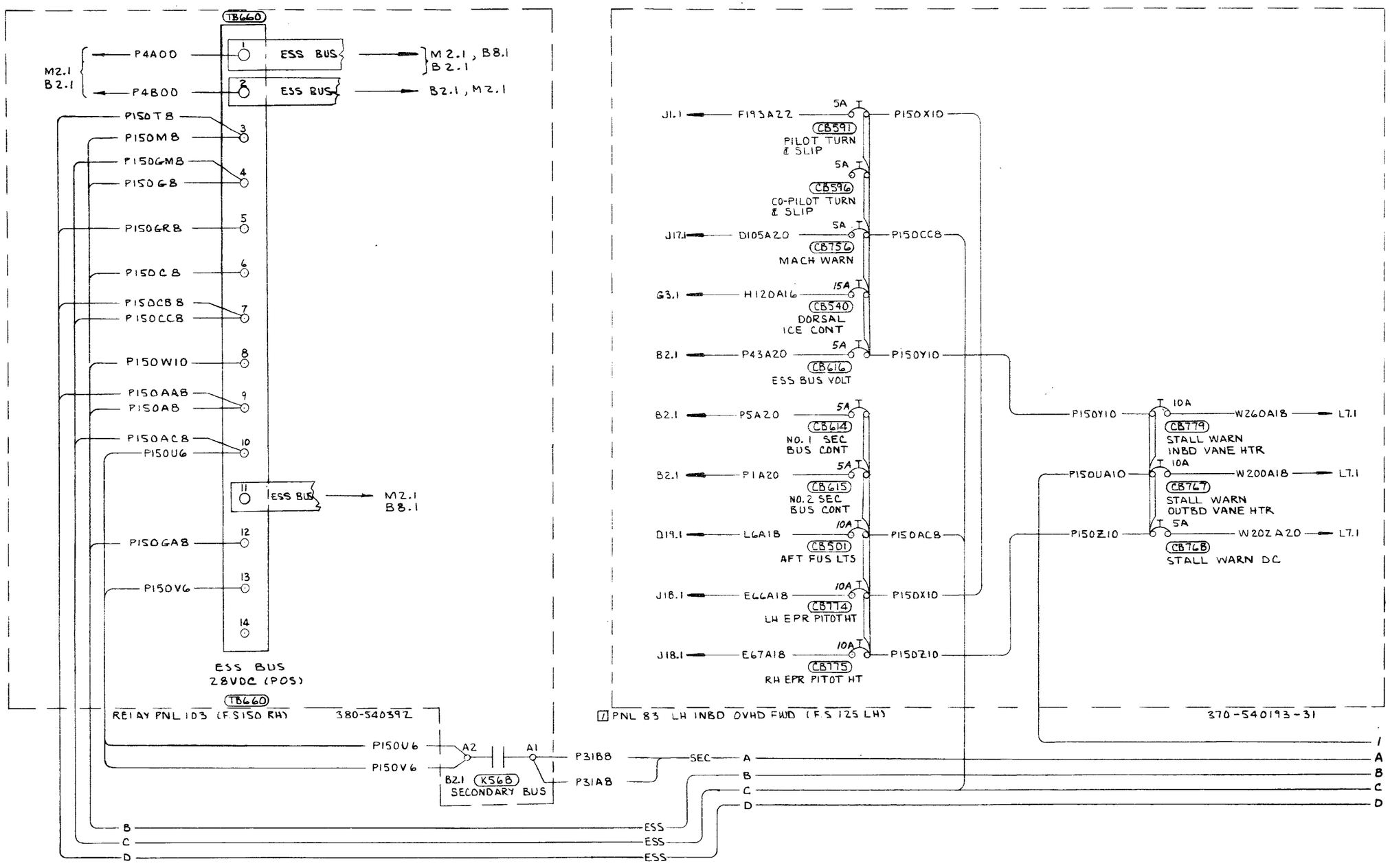

EFFECTIVITY

1 S/N 380-1 THRU -4, -6 THRU -9 & -11

NOTES/LEGEND

SEE SYSTEMS LISTED BELOW:

B2.1 DC BUS TIE-IN SYS
B8.1 AC INVERTER SYS
D19.1 AFT FUS COMPT LT SYS
G3.1 RAM AIR INLETS ANTI-ICE
J1.1 TURN & SLIP IND.
J17.1 MACH AIRSPD WARN SYS
J18.1 ENG PRESS RATIO SYS
L7.1 STALL WARN SYS
M2.1 RELAY ASSY 102, 103 & 104 WIRING

DC POWER DISTRIBUTION SYSTEM
S/N 380-1 & Subs (Excluding FAA Airplanes)
(Sheet 1 of 7)

© COPYRIGHT, 1987 BY SABRELINER CORPORATION

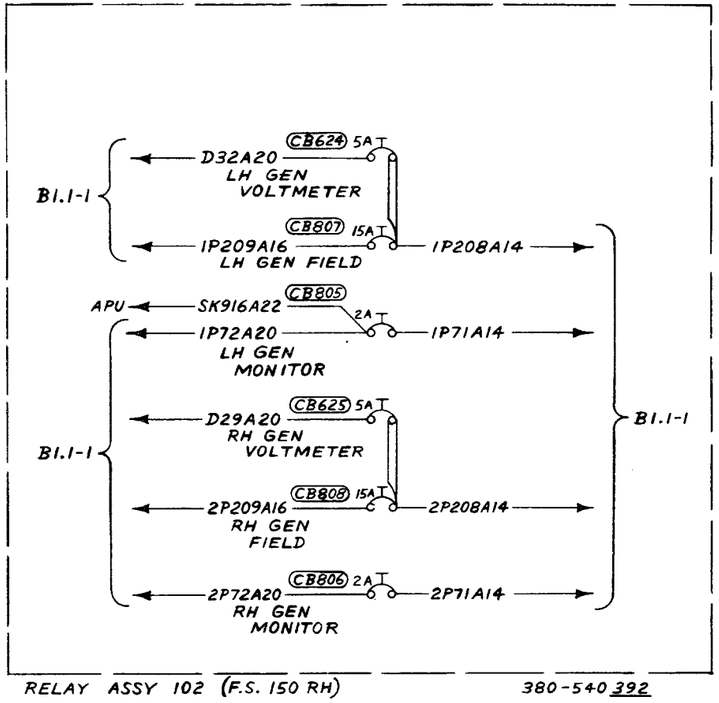

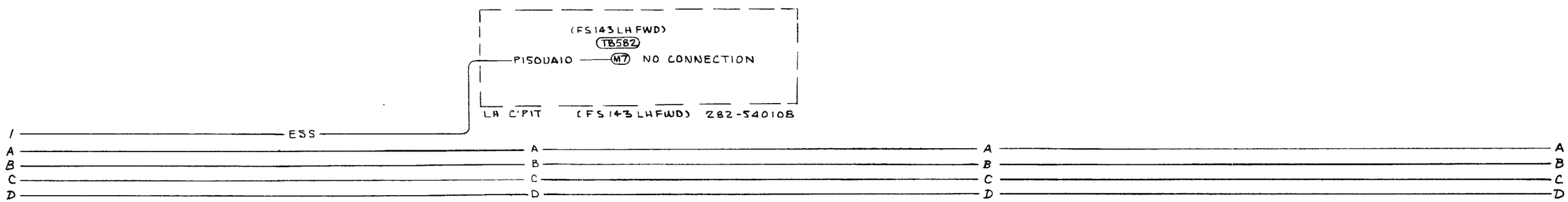

© COPYRIGHT, 1987 BY SABRELINER CORPORATION

DC POWER DISTRIBUTION SYSTEM
S/N 380-1 & Subs (Excluding FAA Airplanes)
(Sheet 2 of 7)

NOTES/LEGEND

SEE SYSTEMS LISTED BELOW:

B6	AC INSTRUMENT POWER SYSTEM
B8	AC INVERTER SYSTEM
C1	FUEL JETTISON & CROSS FEED SYSTEM
C2	FUEL BOOST SYSTEM
C3	FUEL BOOST WARNING SYSTEM
C4	FUEL SHUT-OFF SYSTEM
C5	OIL PRESSURE LOW WARNING SYSTEM
C9	ENGINE STARTING SYSTEM
C10	ENGINE IGNITION SYSTEM
C11	FUEL & OIL TEMP IND SYSTEM
E3	NOSE GEAR STEERING SYSTEM
F1	CABIN PRESS & TEMP CONT SYSTEM
F4	DOOR SEAL & LOCK IND SYSTEM
G4	FUEL FILTER WARN SYSTEM
G5	WINDSHIELD ANTI-ICE SYSTEM
G6	PITOT HT SYSTEM
J2	TRIM POSITION IND SYSTEM
J3	FLAP POSITION IND SYSTEM
J4	FREE TEMP IND SYSTEM
J6	FUEL QUANTITY IND SYSTEM
J12	RPM SPEED IND SYSTEM
L1	FLT CONT TRIM SYSTEM
L2	FLAP CONTROL SYSTEM
L3	SPEED BRAKE ACTUATION & DUMP VALVE SYS

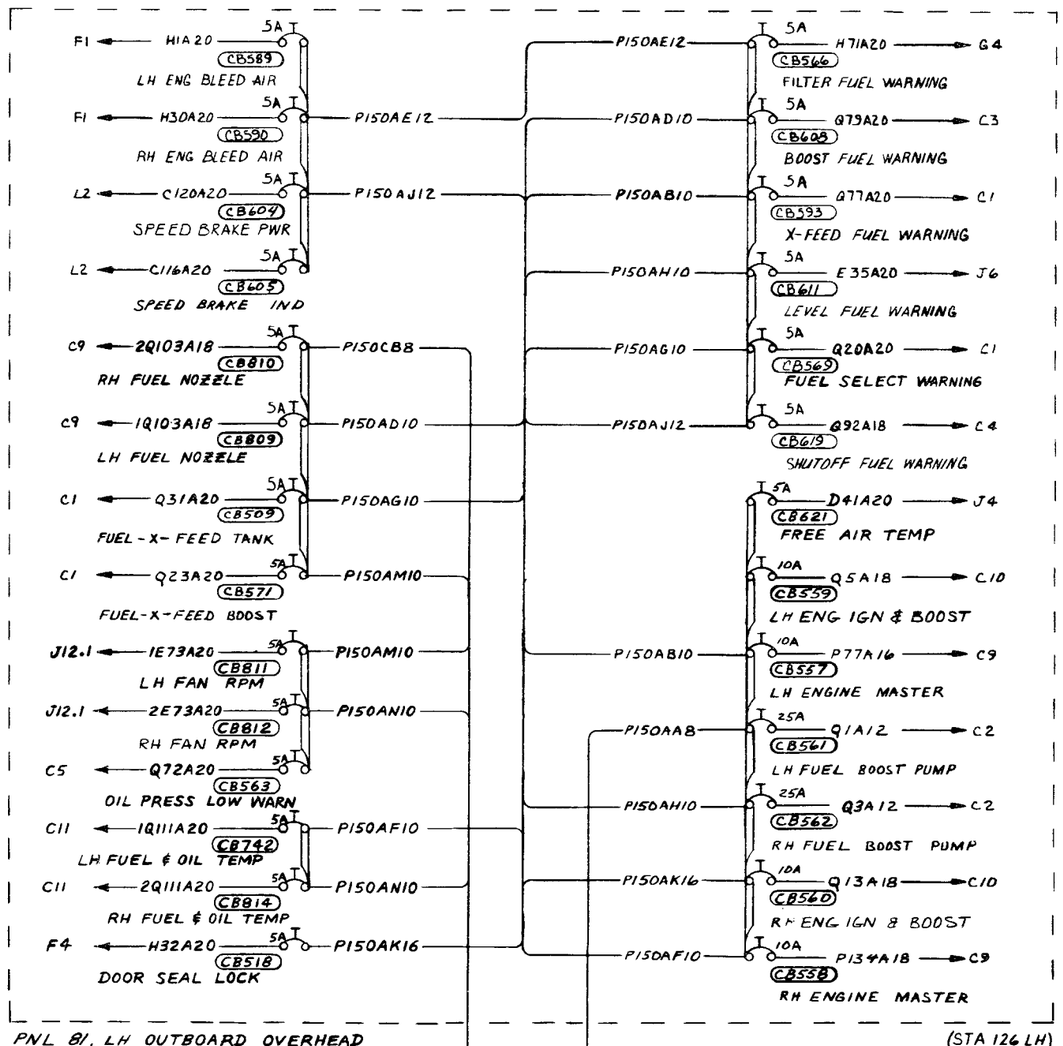

DC POWER DISTRIBUTION SYSTEM
S/N 380-1 & Subs (Excluding FAA Airplanes)
(Sheet 3 of 7)

© COPYRIGHT, 1987 BY SABRELINER CORPORATION

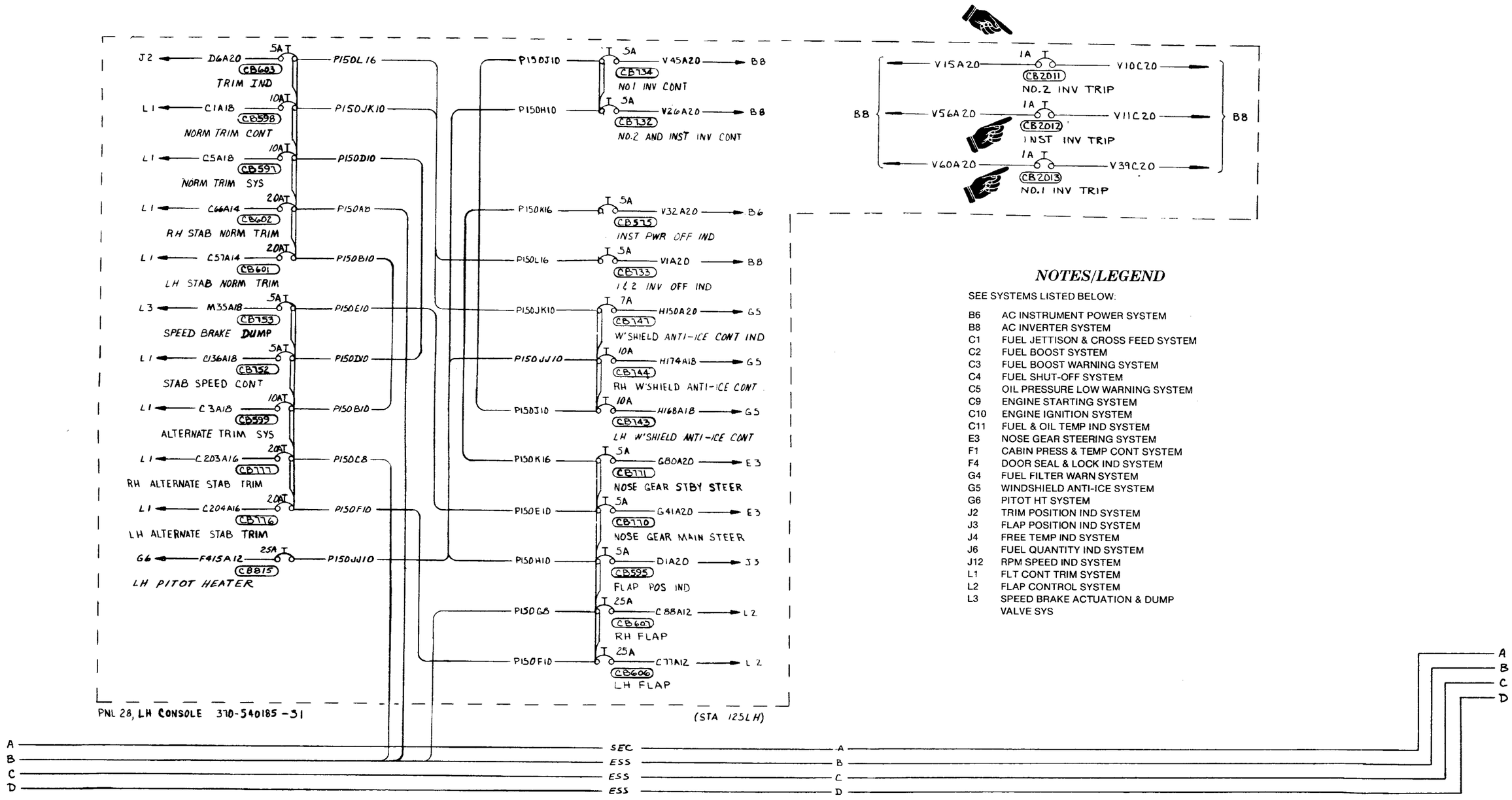

NOTES/LEGEND

SEE SYSTEMS LISTED BELOW:

B6	AC INSTRUMENT POWER SYSTEM
B8	AC INVERTER SYSTEM
C1	FUEL JETTISON & CROSS FEED SYSTEM
C2	FUEL BOOST SYSTEM
C3	FUEL BOOST WARNING SYSTEM
C4	FUEL SHUT-OFF SYSTEM
C5	OIL PRESSURE LOW WARNING SYSTEM
C9	ENGINE STARTING SYSTEM
C10	ENGINE IGNITION SYSTEM
C11	FUEL & OIL TEMP IND SYSTEM
E3	NOSE GEAR STEERING SYSTEM
F1	CABIN PRESS & TEMP CONT SYSTEM
F4	DOOR SEAL & LOCK IND SYSTEM
G4	FUEL FILTER WARN SYSTEM
G5	WINDSHIELD ANTI-ICE SYSTEM
G6	PITOT HT SYSTEM
J2	TRIM POSITION IND SYSTEM
J3	FLAP POSITION IND SYSTEM
J4	FREE TEMP IND SYSTEM
J6	FUEL QUANTITY IND SYSTEM
J12	RPM SPEED IND SYSTEM
L1	FLT CONT TRIM SYSTEM
L2	FLAP CONTROL SYSTEM
L3	SPEED BRAKE ACTUATION & DUMP VALVE SYS

© COPYRIGHT, 1988 BY SABRELINER CORPORATION

NOTES/LEGEND

SEE SYSTEMS LISTED BELOW:

B1-1	DC GENERATOR SYSTEM
B1-2	DC GENERATOR SYSTEM
D1	EMERGENCY LIGHTING SYSTEM
D2	CAUTION, WARNING, INDICATOR LIGHTS DIM & TEST, PASS COMPT FLOOR STEP LT SYSTEM
D5	ENG RADIO & INST FLOOD LIGHT SYS
D7	PEDESTAL FLOOD LIGHT SYSTEM
D8	PASS DOME, COAT & BAGGAGE COMPT LIGHTING SYSTEM
D9	THUNDERSTORM LIGHT SYSTEM
D10	COCKPIT DOME, MAP & UTILITY LT SYS
D12	INST FLOOD LIGHTING SYSTEM
D13	CONSOLE FLOOD LIGHTING SYSTEM
D20	LANDING & TAXI LT SYS
D21	POSITION & ANTI-COLLISION LT SYS
E1	LANDING GEAR CONTROL SYSTEM
E2	LANDING GEAR POSITION INDICATING & WARNING SYSTEM
E4	MAIN LDG GEAR ANTI-SKID SYSTEM
F1	CABIN PRESS & TEMP CONT SYSTEM
F3	CABIN SUPPLY AIR OVERHEAT WARN SYSTEM
F5	AFT FUS O'HEAT INDICATING SYSTEM
G6	PITOT HEAT SYSTEM
G10	FOOT HEATER SYSTEM
H1	CABIN PRESS WARNING & PASS OXYGEN FLOW SYSTEM
H3	ENG FIRE DETECTOR SYSTEM
H4	ENG FIRE EXTINGUISHER SYSTEM
H6	PASSENGER COMPARTMENT SIGNS
J8	THRUST REVERSER INDICATING SYS
K1	WINDSHIELD WIPER SYSTEM
K3	ENG THRUST REVERSER CONT SYSTEM
L7	STALL WARNING SYSTEM

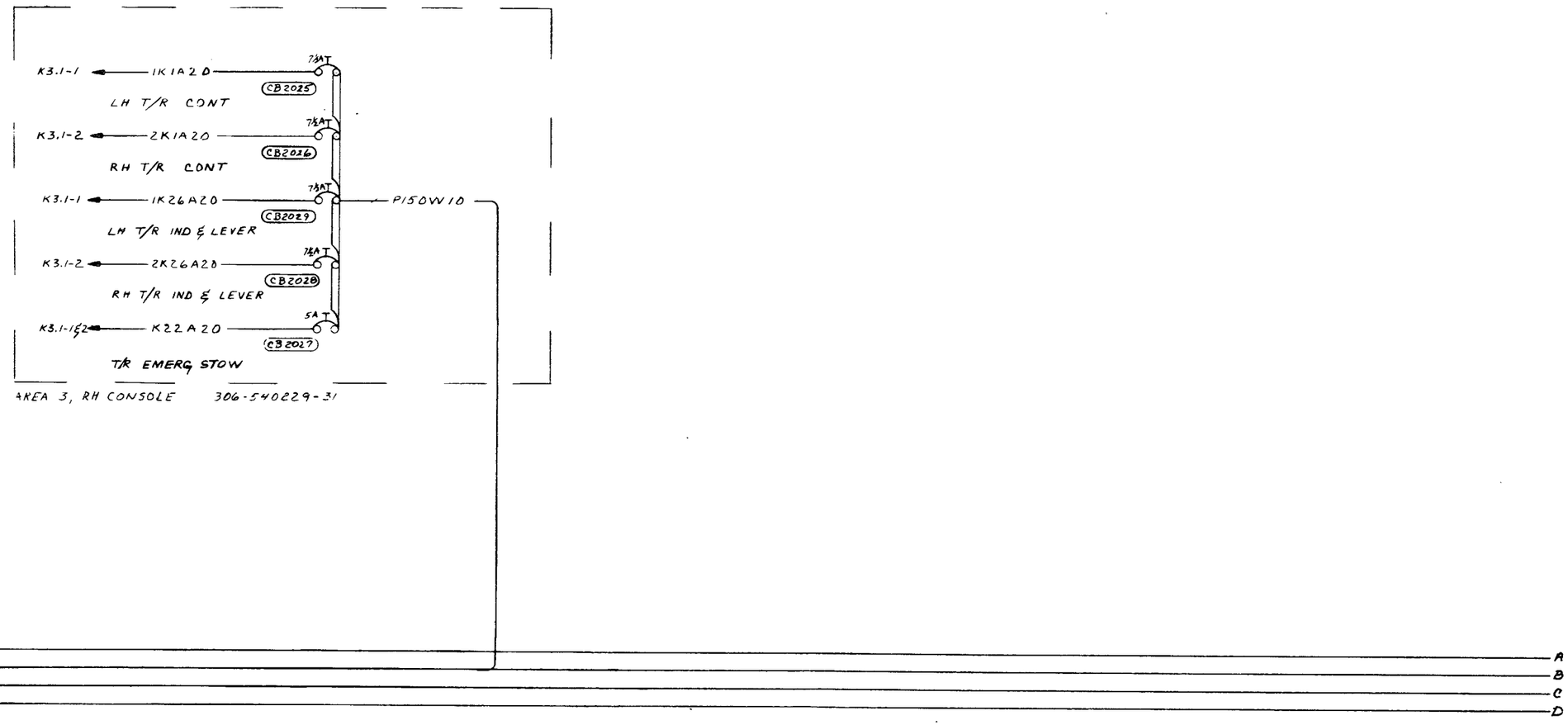

DC POWER DISTRIBUTION SYSTEM
S/N 380-1 & Subs (Excluding FAA Airplanes)
(Sheet 5 of 7)

© COPYRIGHT, 1987 BY SABRELINER CORPORATION

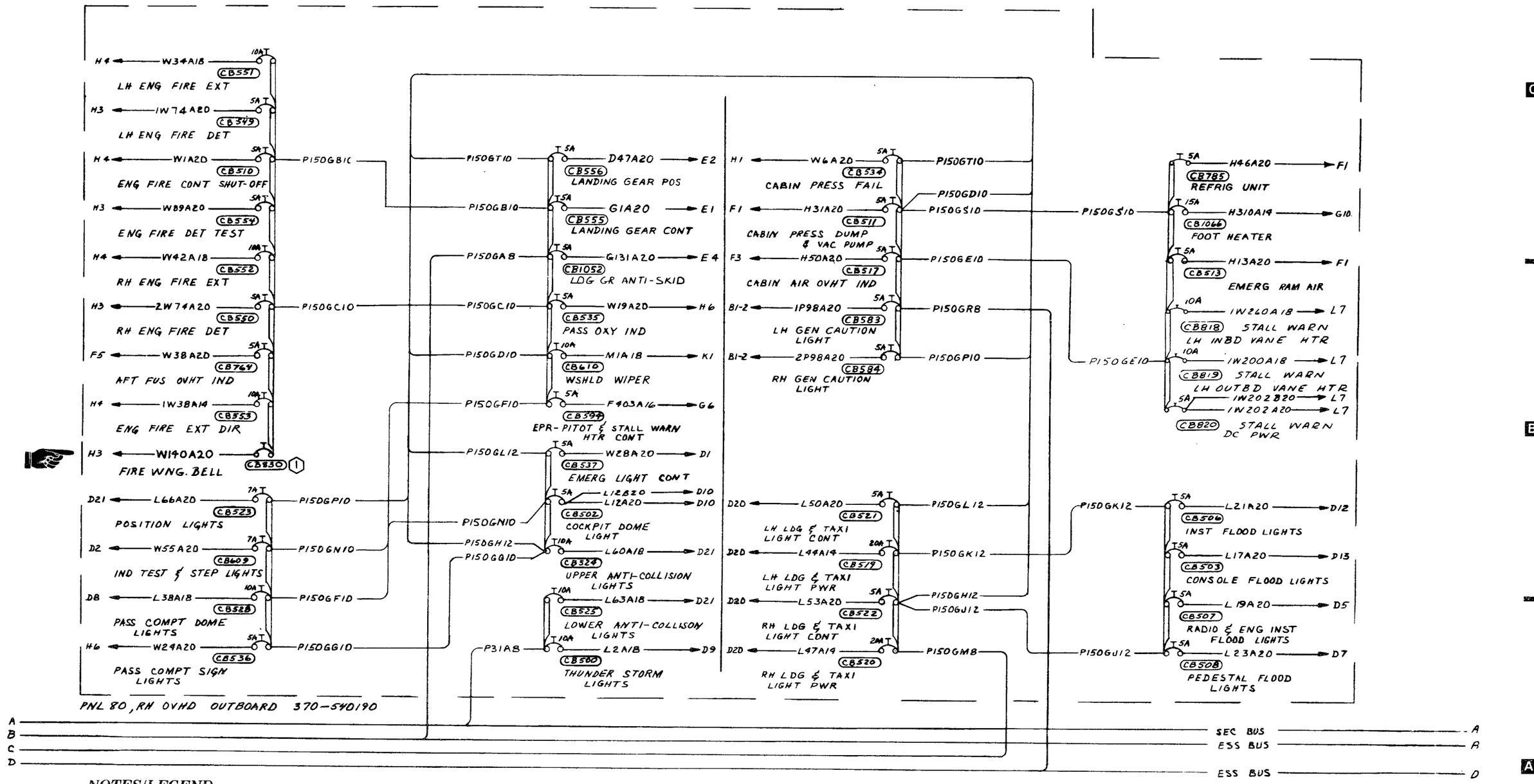

NOTES/LEGEND

1. CB830 ADDED ON AIRPLANES MODIFIED BY S/L 34
2. SEE SYSTEMS LISTED BELOW:

- B1-1 DC GENERATOR SYSTEM
- B1-2 DC GENERATOR SYSTEM
- D1 EMERGENCY LIGHTING SYSTEM
- D2 CAUTION, WARNING, INDICATOR LIGHTS DIM & TEST, PASS COMPT FLOOR STEP LT SYSTEM
- D5 ENG RADIO & INST FLOOD LIGHT SYS
- D7 PEDESTAL FLOOD LIGHT SYSTEM
- D8 PASS DOME, COAT & BAGGAGE COMPT LIGHTING SYSTEM
- D9 THUNDERSTORM LIGHT SYSTEM
- D10 COCKPIT DOME, MAP & UTILITY LT SYS
- D12 INST FLOOD LIGHTING SYSTEM
- D13 CONSOLE FLOOD LIGHTING SYSTEM
- D20 LANDING & TAXI LT SYS
- D21 POSITION & ANTI-COLLISION LT SYS
- E1 LANDING GEAR CONTROL SYSTEM
- E2 LANDING GEAR POSITION INDICATING & WARNING SYSTEM
- E4 MAIN LDG GEAR ANTI-SKID SYSTEM
- F1 CABIN PRESS & TEMP CONT SYSTEM
- F3 CABIN SUPPLY AIR OVERHEAT WARN SYS
- F5 AFT FUS O'HEAT INDICATING SYSTEM
- G6 PITOT HEAT SYSTEM
- G10 FOOT HEATER SYSTEM
- H1 CABIN PRESS WARNING & PASS OXYGEN FLOW SYSTEM
- H3 ENG FIRE DETECTOR SYSTEM
- H4 ENG FIRE EXTINGUISHER SYSTEM
- H6 PASSENGER COMPARTMENT SIGNS
- J8 THRUST REVERSER INDICATING SYS
- K1 WINDSHIELD WIPER SYSTEM
- K3 ENG THRUST REVERSER CONT SYSTEM
- L7 STALL WARNING SYSTEM

© COPYRIGHT, 1987 BY SABRELINER CORPORATION

DC POWER DISTRIBUTION SYSTEM
S/N 380-1 & Subs (Excluding FAA Airplanes)
(Sheet 6 of 7)

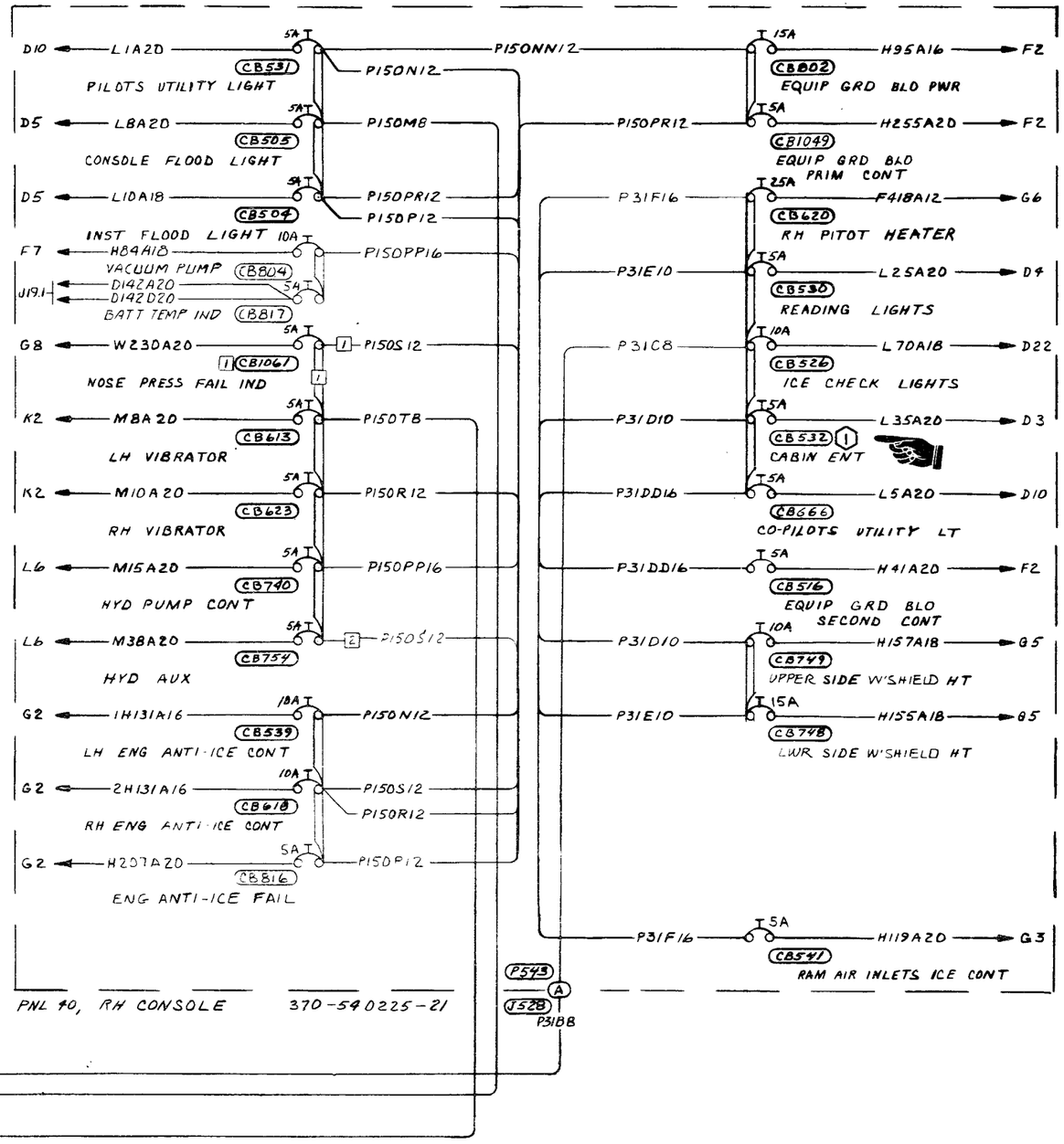

NOTES/LEGEND

1. 2A IF S/L 72 ACCOMPLISHED
2. SEE SYSTEMS LISTED BELOW:

D3	CABIN ENTRANCE & COUCH LIGHTS
D4	PASS READING LIGHT SYSTEM
D5	FLOOD LIGHT SYSTEM
D8	PASS DOME, COAT & BAGGAGE COMPT LIGHT SYS
D10	C'PIT DOME, MAP & UTILITY LIGHT SYS
D22	ICE CHECK LIGHT SYS
F2	EQUIP GRD COOLING BLOWER SYS
F7	VACUUM PUMP SYSTEM
G2	ENG INLET ANTI-ICE SYSTEM
G5	WINDSHIELD ANTI-ICE SYSTEM
G6	PITOT HEAT SYSTEM
G8	NOSE COMPT PRESS FAIL IND SYS
K2	INSTRUMENT PANEL VIBRATOR
L6	HYDRAULIC PUMP SYSTEM

EFFECTIVITY

1 S/N 380-1 THRU -4, -6 THRU -9 -11, -12, -13, -15, -17, -19, -21 & -23

2 S/N 380-24 & SUBS

© COPYRIGHT, 1987 BY SABRELINER CORPORATION

DC POWER DISTRIBUTION SYSTEM
S/N 380-1 & Subs (Excluding FAA Airplanes)
(Sheet 7 of 7)

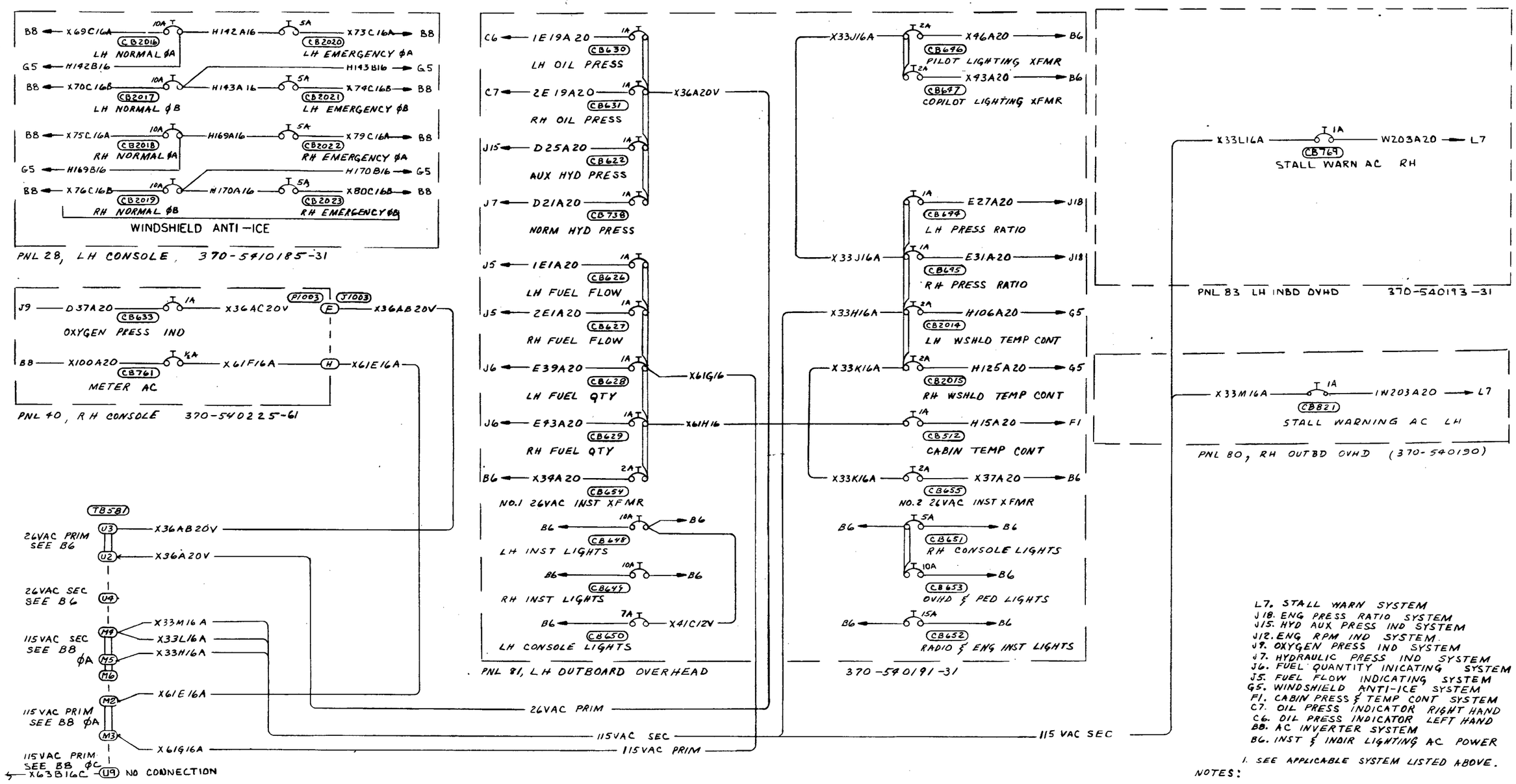

L7. STALL WARN SYSTEM
J18. ENG PRESS RATIO SYSTEM
J15. HYD AUX PRESS IND SYSTEM
J12. ENG RPM IND SYSTEM
J9. OXYGEN PRESS IND SYSTEM
J7. HYDRAULIC PRESS IND SYSTEM
J6. FUEL QUANTITY INICATING SYSTEM
J5. FUEL FLOW INDICATING SYSTEM
G5. WINDSHIELD ANTI-ICE SYSTEM
F1. CABIN PRESS & TEMP CONT SYSTEM
C7. OIL PRESS INDICATOR RIGHT HAND
C6. OIL PRESS INDICATOR LEFT HAND
B8. AC INVERTER SYSTEM
B6. INST & INDIR LIGHTING AC POWER

NOTES:
1. SEE APPLICABLE SYSTEM LISTED ABOVE.

© COPYRIGHT, 1981 BY ROCKWELL INTERNATIONAL

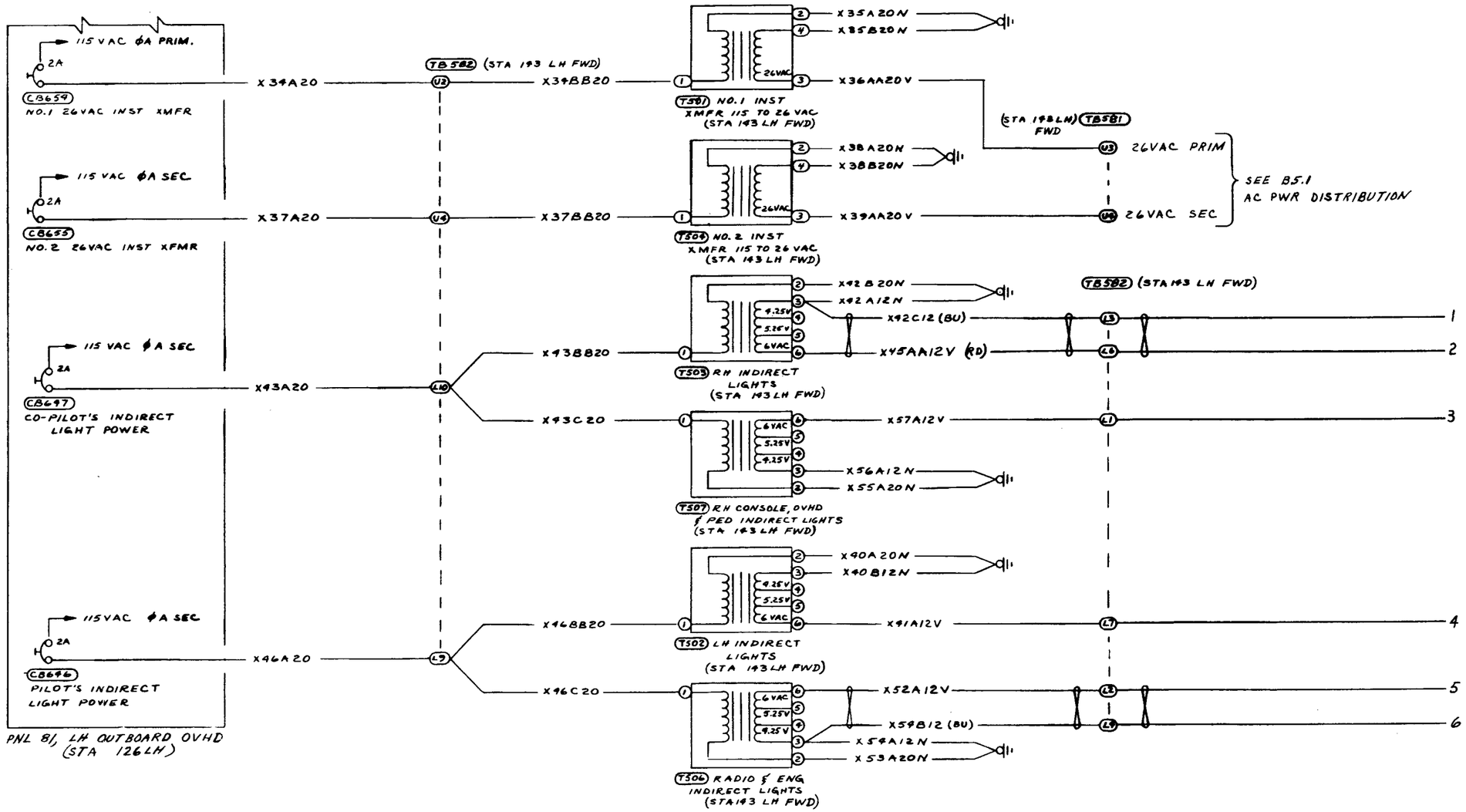

AC INSTRUMENT & INDIRECT LIGHTING SYSTEM
(Sheet 1 of 2)

© COPYRIGHT, 1984 BY SABRELINER CORPORATION

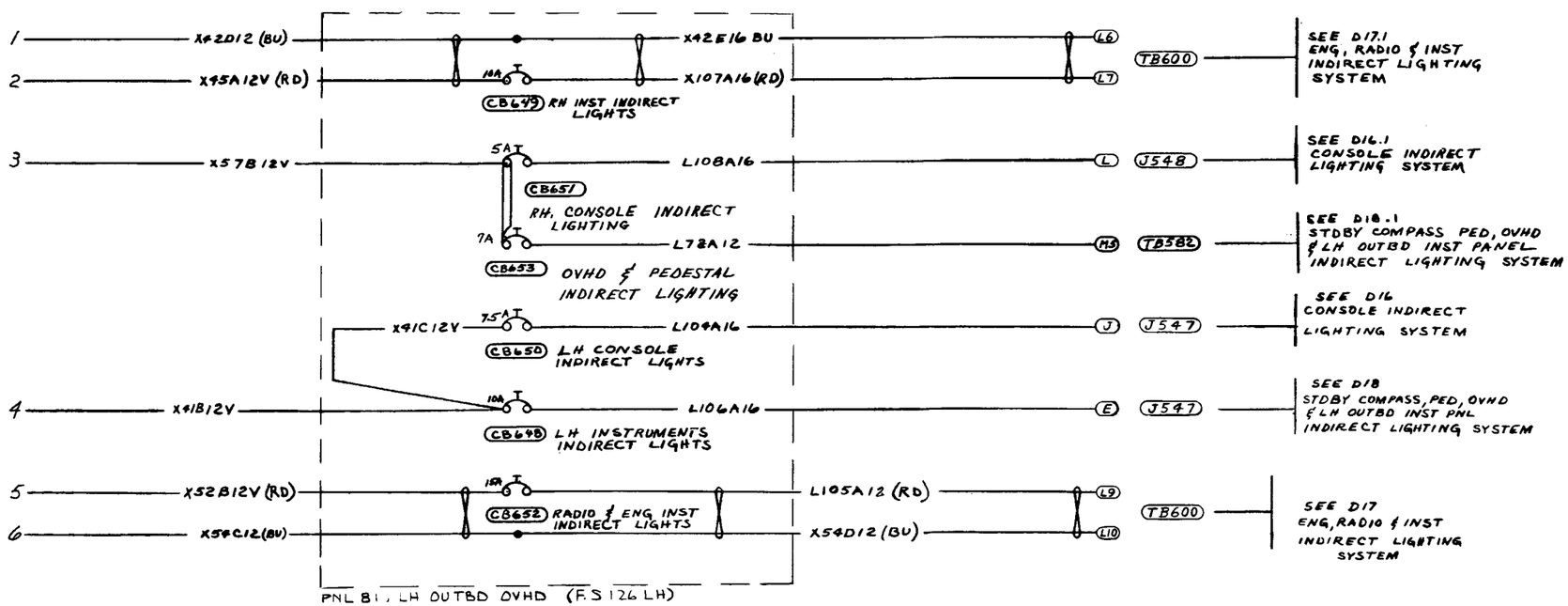

AC INSTRUMENT & INDIRECT LIGHTING SYSTEM
(Sheet 2 of 2)

© COPYRIGHT, 1984 BY SABRELINER CORPORATION

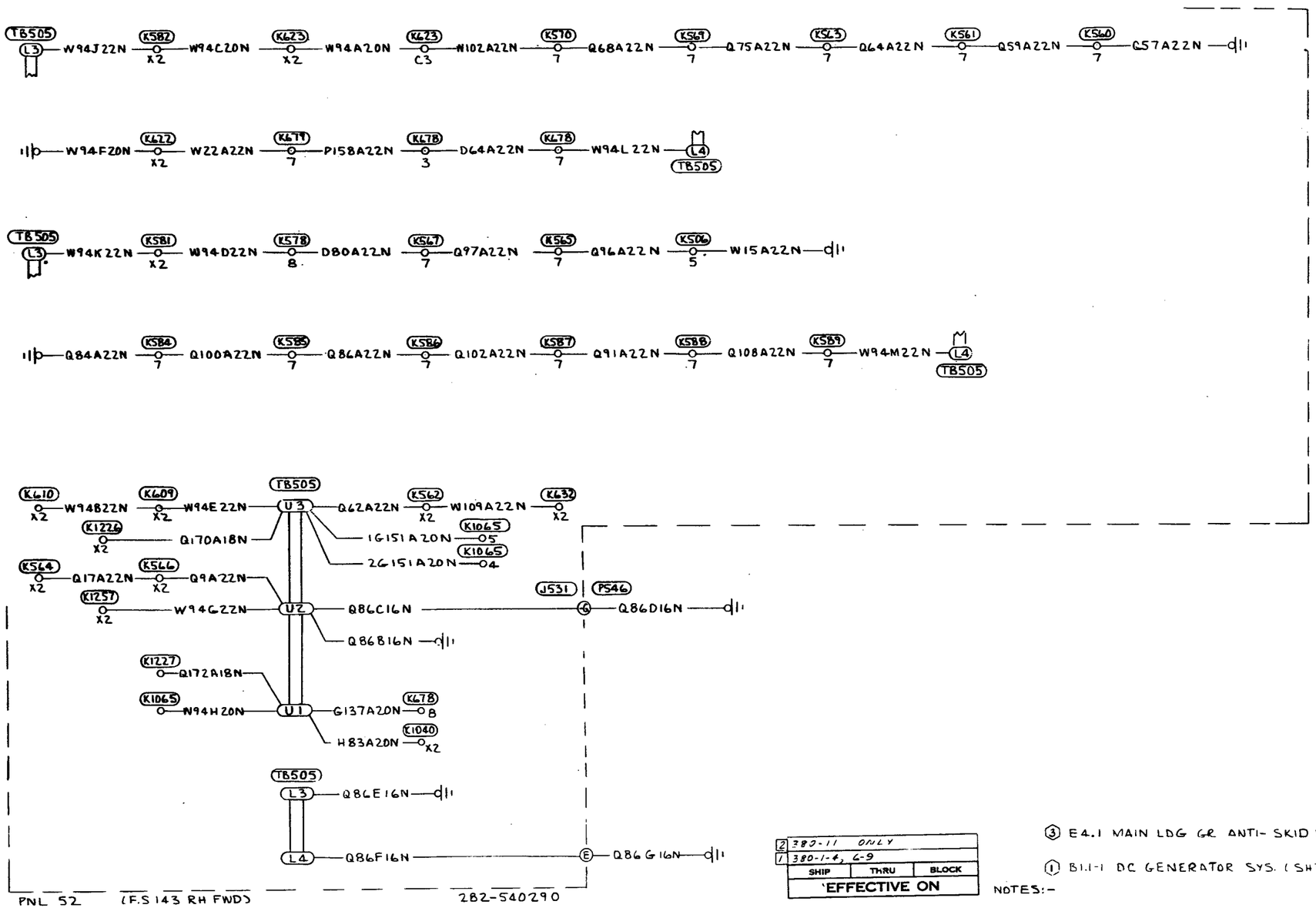

2	380-11 ONLY		
1	380-1-4, 6-9		
SHIP	THRU	BLOCK	
EFFECTIVE ON			

NOTES:-

(3) E4.1 MAIN LDG GR ANTI-SKID SYS

(1) B1.1-1 DC GENERATOR SYS. (SHT 1)

ELECTRICAL GROUND SYSTEM
(380-1 Thru -4, -6 Thru -9, & -11)
(Sheet 1 of 2)

© COPYRIGHT, 1981 BY ROCKWELL INTERNATIONAL

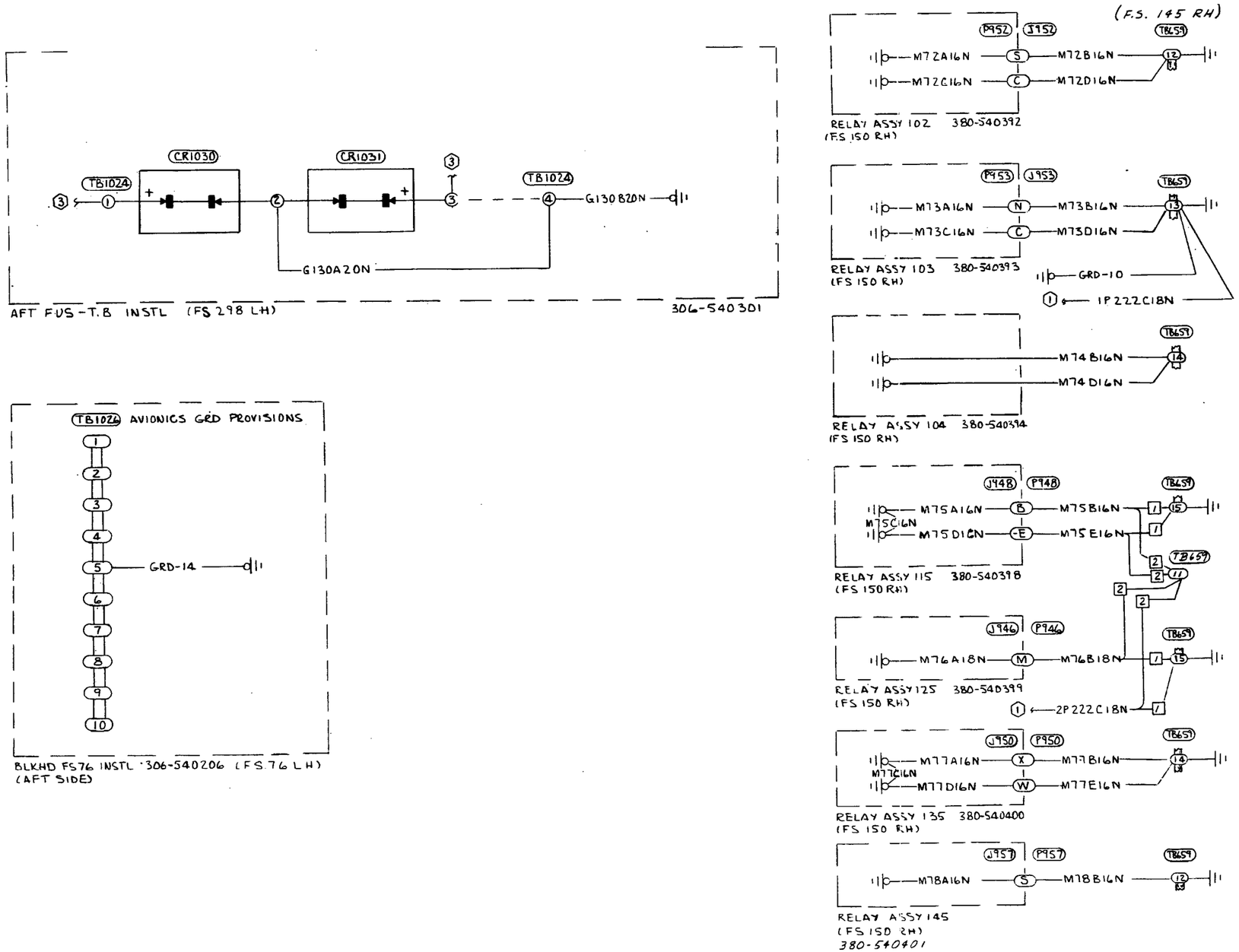

ELECTRICAL GROUND SYSTEM
(380-1 Thru -4, -6 Thru -9, & -11)
(Sheet 2 of 2)

© COPYRIGHT, 1981 BY ROCKWELL INTERNATIONAL

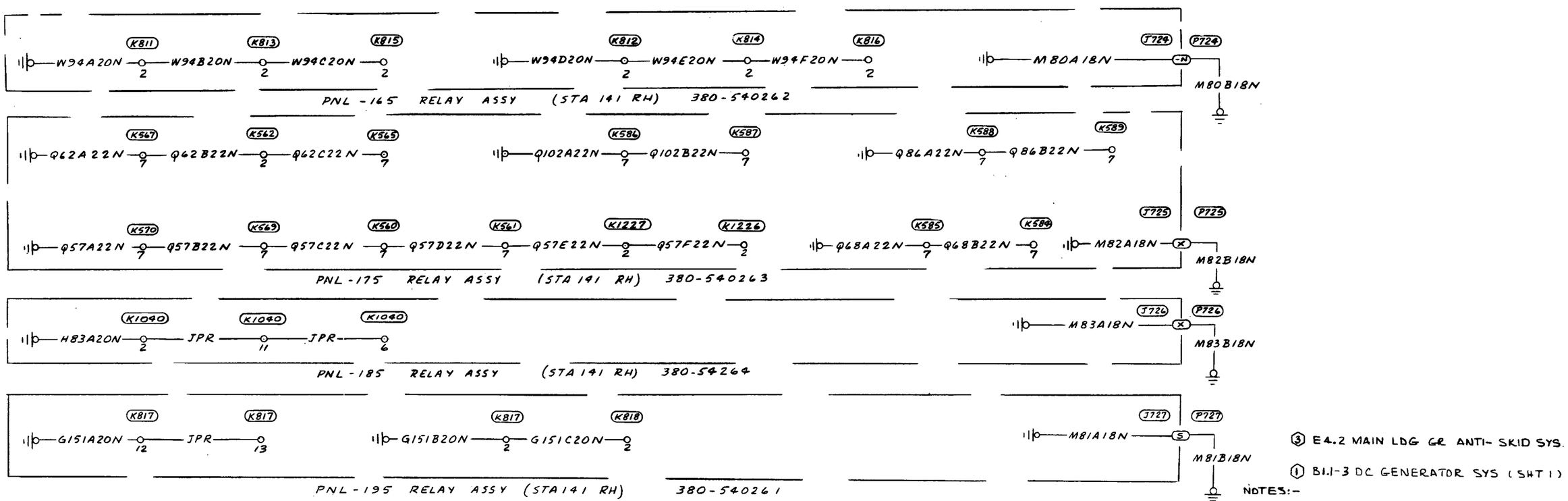

ELECTRICAL GROUND SYSTEM
(380-5, -10, -12 & Subs)
(Sheet 1 of 2)

© COPYRIGHT, 1981 BY ROCKWELL INTERNATIONAL

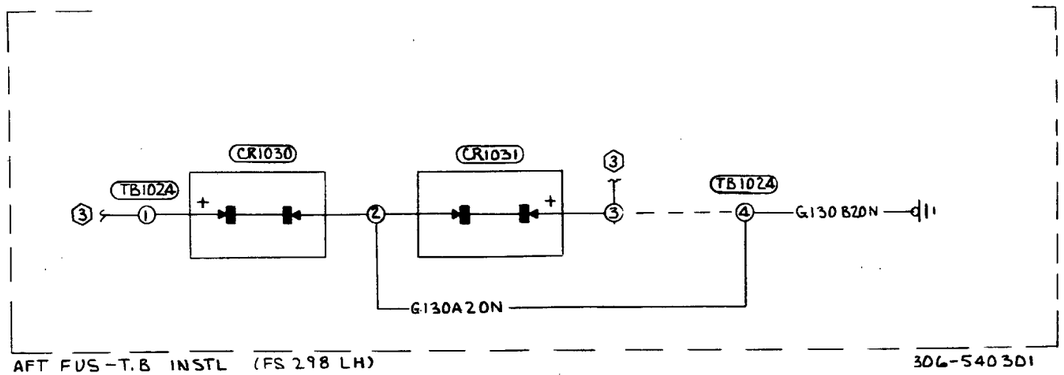

AFT FUS-T.B INSTL (FS 298 LH) 306-540301

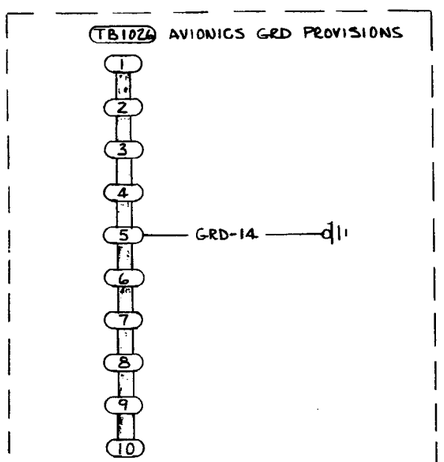

BLKHD FS76 INSTL 306-540206 (FS.76 LH)
(AFT SIDE)

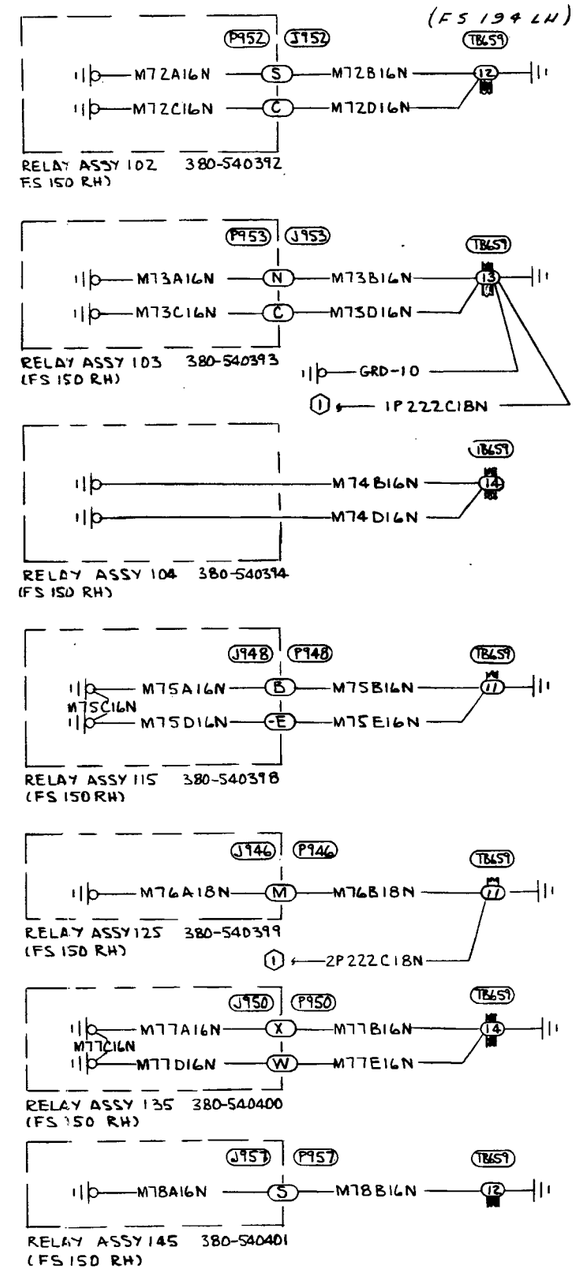

ELECTRICAL GROUND SYSTEM
(380-5, -10, -12 & Subs)
(Sheet 2 of 2)

© COPYRIGHT, 1981 BY ROCKWELL INTERNATIONAL

CHAPTER

26

FIRE PROTECTION

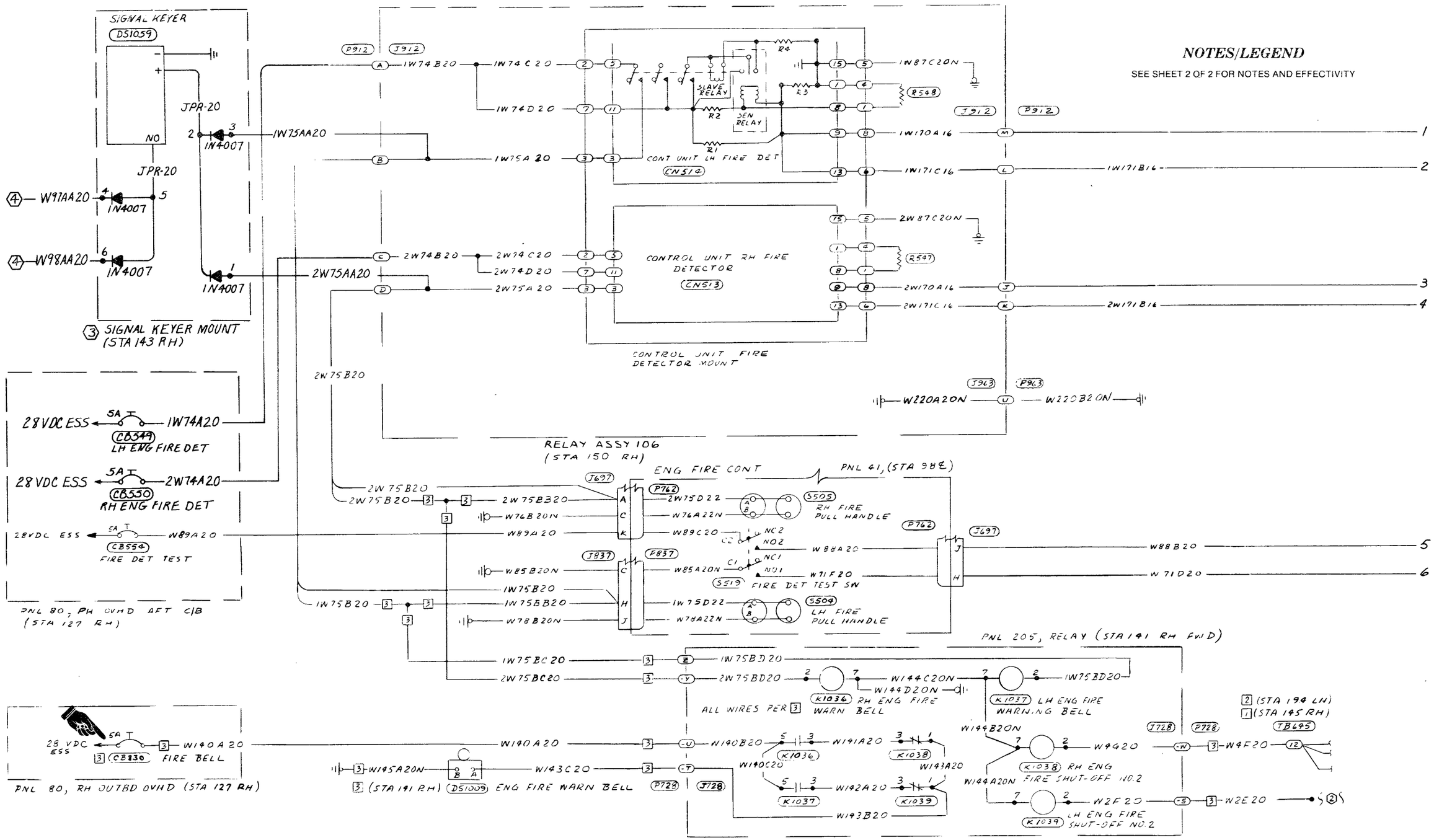

ENGINE FIRE DETECTOR SYSTEM
(Sheet 1 of 2)

© COPYRIGHT, 1987 BY SABRELINER CORPORATION

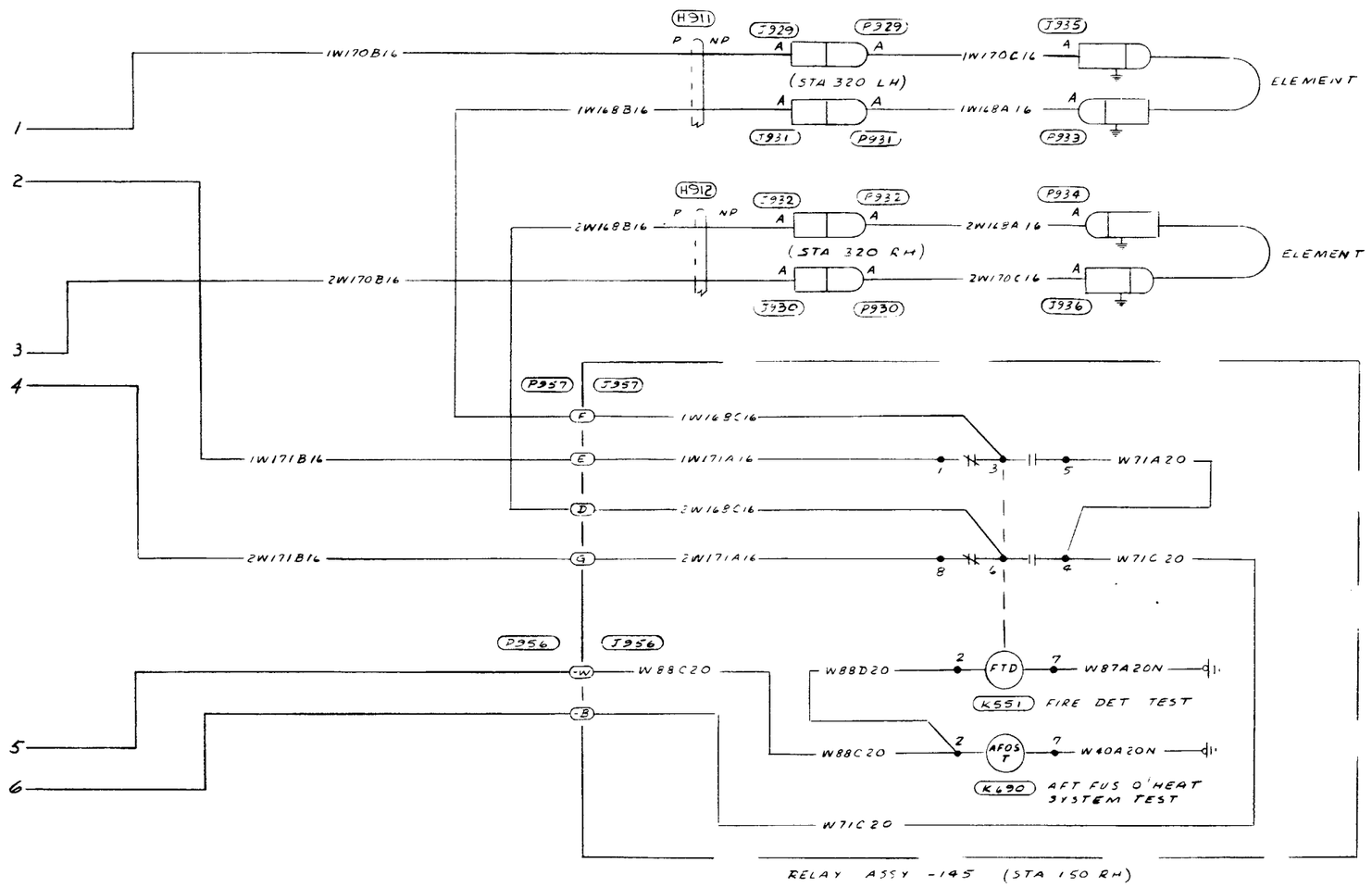

NOTES/LEGEND

1. SEE F5.1 AFT FUSELAGE "0" HEATER INDICATOR SYSTEM
2. SEE H4.1 ENGINE FIRE EXTINGUISHER SYSTEM.
3. ADDED PER S/L 84-4.
4. SEE D2.1 (ZONE 4 B&C) CAUTION WARNING AND INDICATOR LIGHTS DIM AND TEST SYSTEM.

EFFECTIVITY

1. S/N 380-1 THRU -4, -6 THRU -9 & -11
2. S/N 380-5, -10, -12 & SUBS
3. ADDED PER S/L 34

© COPYRIGHT, 1987 BY SABRELINER CORPORATION

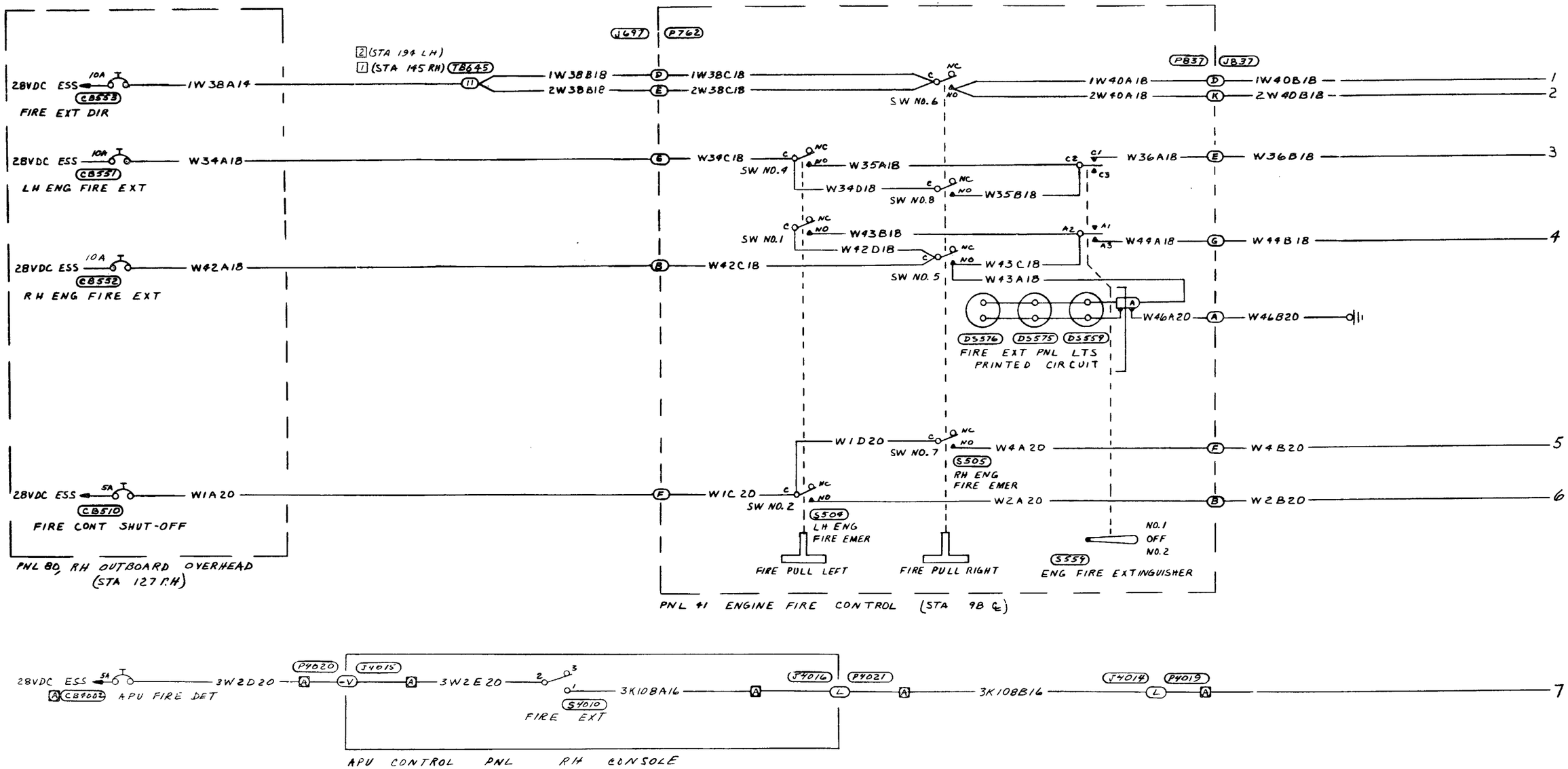

NOTES/LEGEND

1. FOR DETAIL CIRCUIT, SEE B7.1 & B7.2, ELECTRICAL GROUND SYSTEM
2. AIRPLANES WITH APU
3. SEE H3.1 ENGINE FIRE DETECTOR SYSTEM

EFFECTIVITY

1. S/N 380-1 THRU -4, -6 THRU -9 & -11
2. S/N 380-5, -10, -12 & SUBS
3. AIRPLANES MODIFIED BY S/L 34

ENGINE FIRE EXTINGUISHER SYSTEM
(Sheet 1 of 2)

© COPYRIGHT, 1987 BY SABRELINER CORPORATION

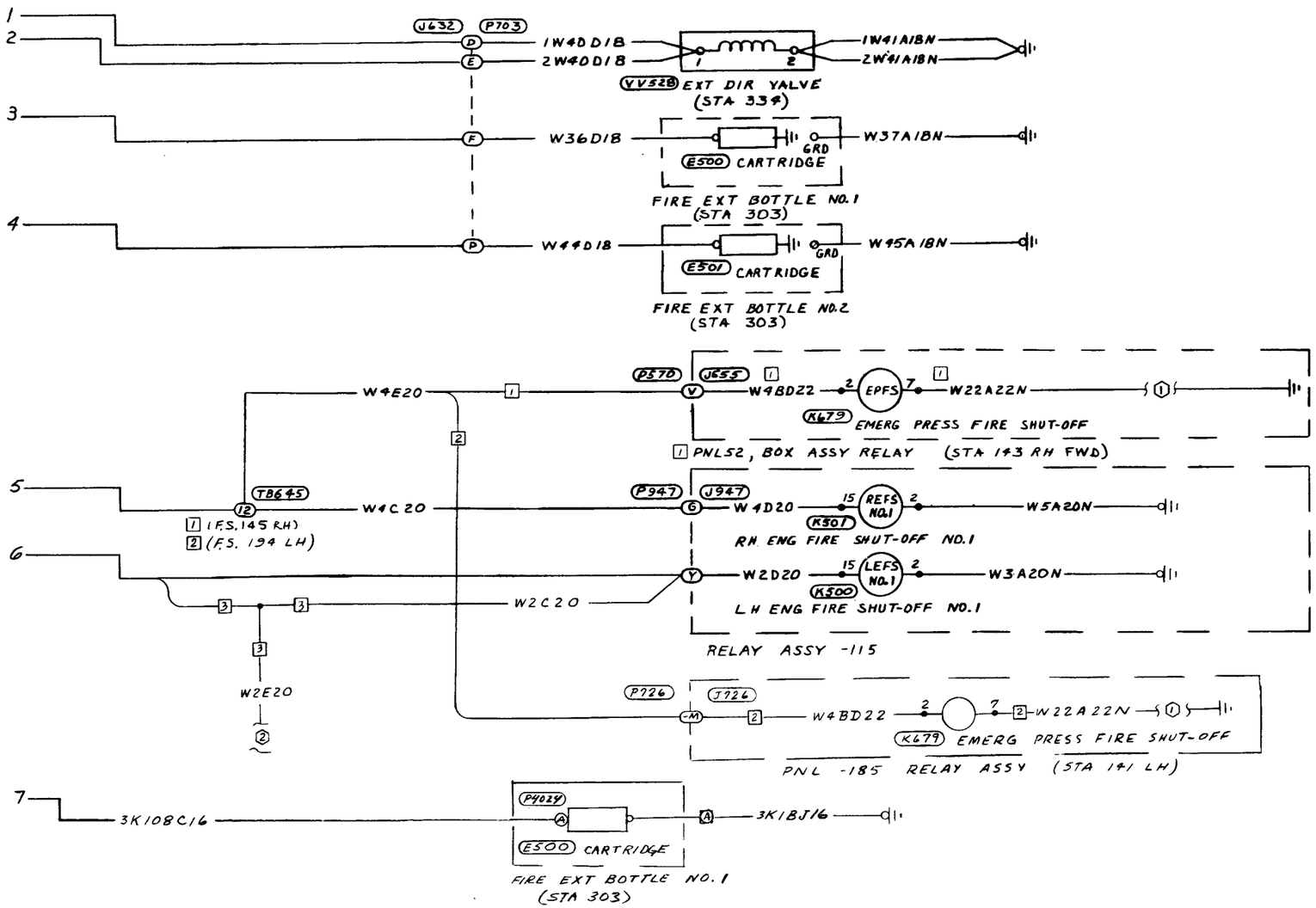

© COPYRIGHT, 1987 BY SABRELINER CORPORATION

ENGINE FIRE EXTINGUISHER SYSTEM
(Sheet 1 of 2)

4 | 3 | 2 | 1 | H4.1

CHAPTER

27

FLIGHT CONTROLS

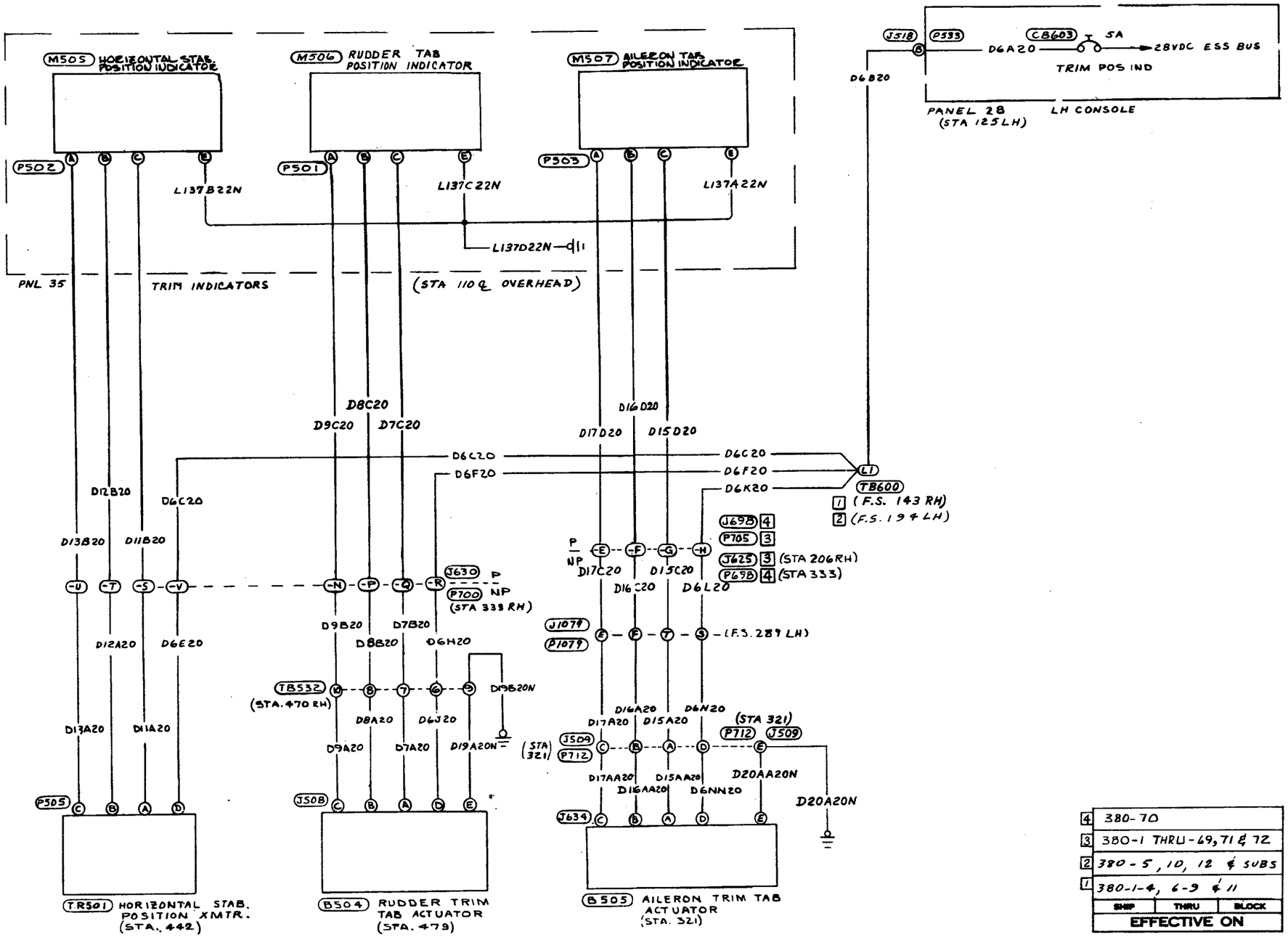

4	380-70
3	380-1 THRU-69, 71 & 72
2	380-5, 10, 12 & SUBS
1	380-1-4, 6-9 & 11

SHIP	THRU	BLOCK
EFFECTIVE ON		

© COPYRIGHT, 1981 BY ROCKWELL INTERNATIONAL

NOTES/LEGEND

1. FOR DETAIL GRD SYS SEE D17. ENG. RADIO AND INST. INDIR. LT. SYS.
2. CONTACTS OPEN WITH FLAPS IN FULL UP POSITION WITH PRELOAD. (FLAPS IN ANY POSITION OTHER THAN FULL UP, CONTACTS WILL BE CLOSED)

EFFECTIVITY

1 S/N 380-1 thru -68
2 S/N 380-69 thru -72

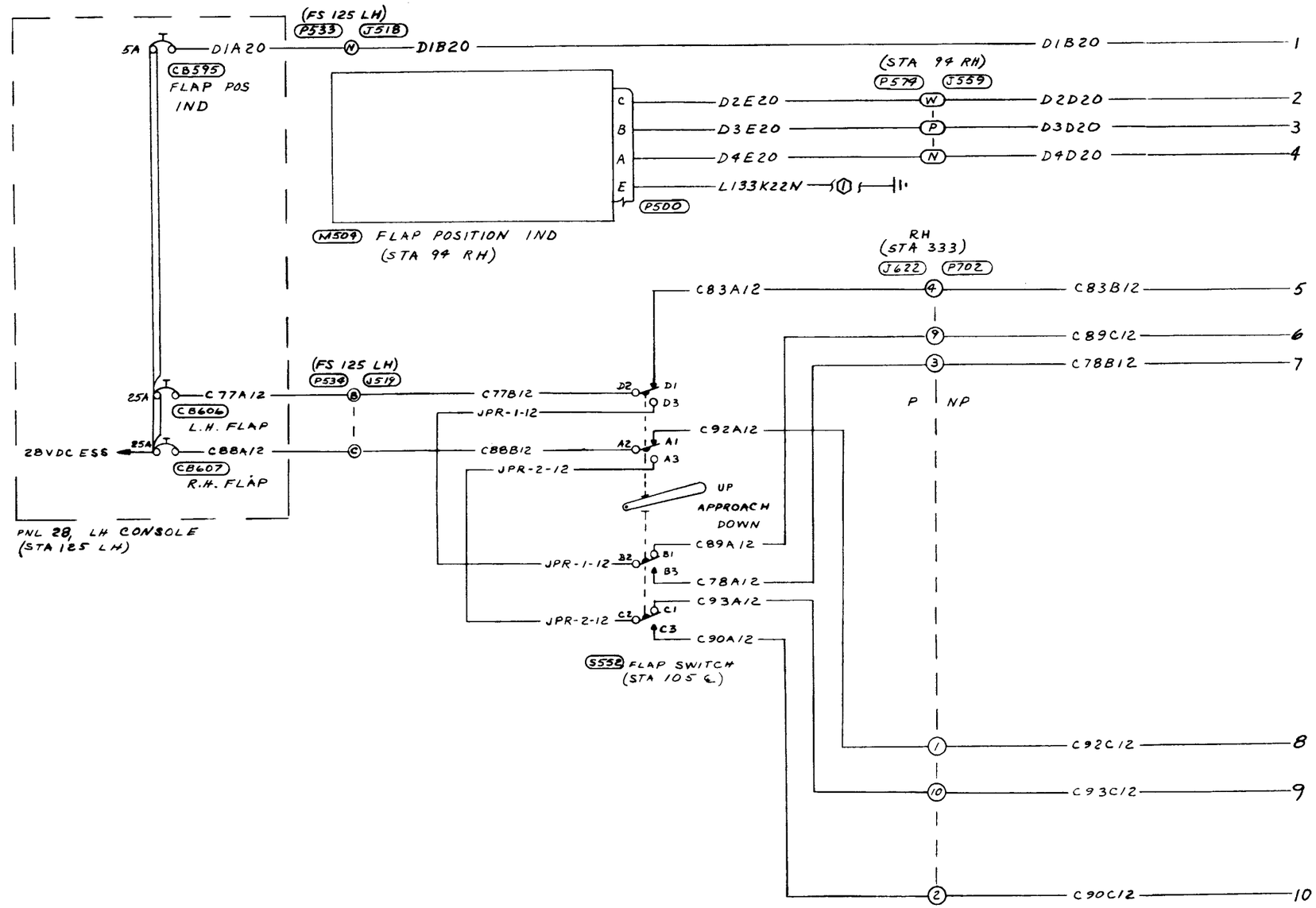

FLAP CONTROL AND POSITION INDICATING SYSTEMS
(Sheet 1 of 2)

© COPYRIGHT, 1990 BY SABRELINER CORPORATION

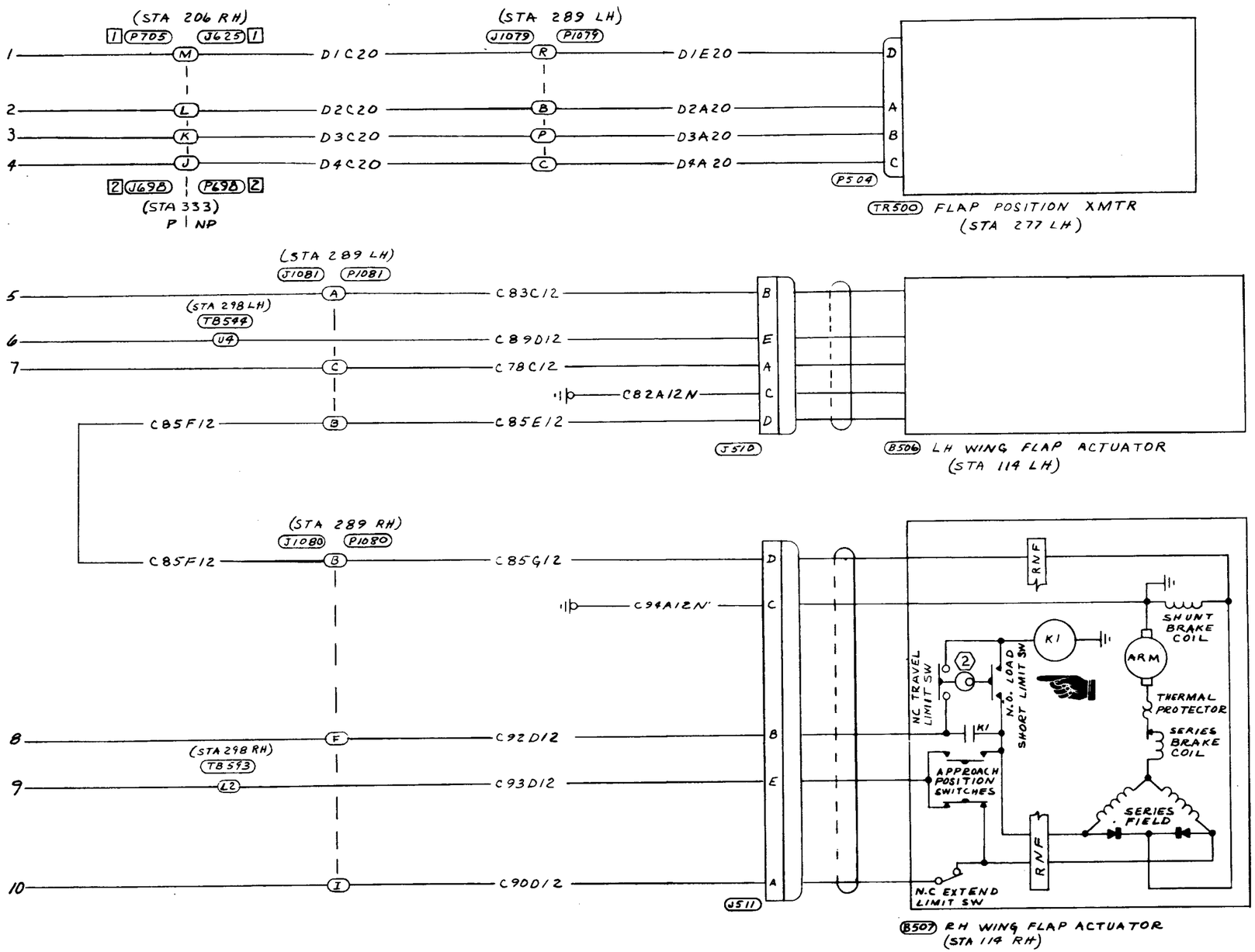

FLAP CONTROL AND POSITION INDICATING SYSTEMS
(Sheet 2 of 2)

© COPYRIGHT, 1990 BY SABRELINER CORPORATION

4	3	2	1	L2.1

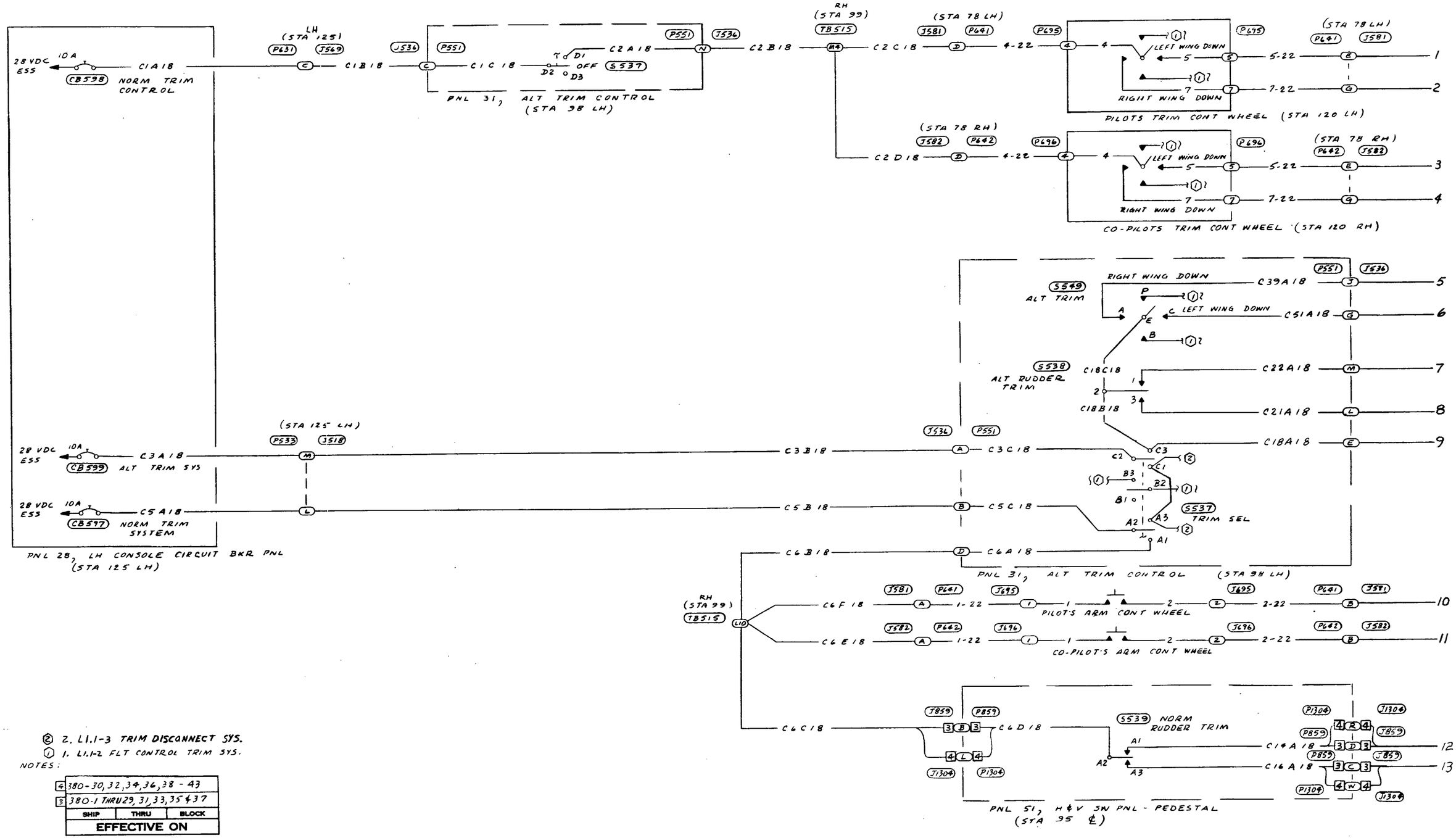

NOTES:

2. L1.1-3 TRIM DISCONNECT SYS.
1. L1.1-2 FLT CONTROL TRIM SYS.

4	380-30, 32, 34, 36, 38 - 43	
3	380-1 THRU 29, 31, 33, 35 & 37	
SHIP	THRU	BLOCK
EFFECTIVE ON		

FLIGHT CONTROL TRIM SYSTEM
(380-1 Thru -43)
(Sheet 1 of 2)

© COPYRIGHT, 1981 BY ROCKWELL INTERNATIONAL

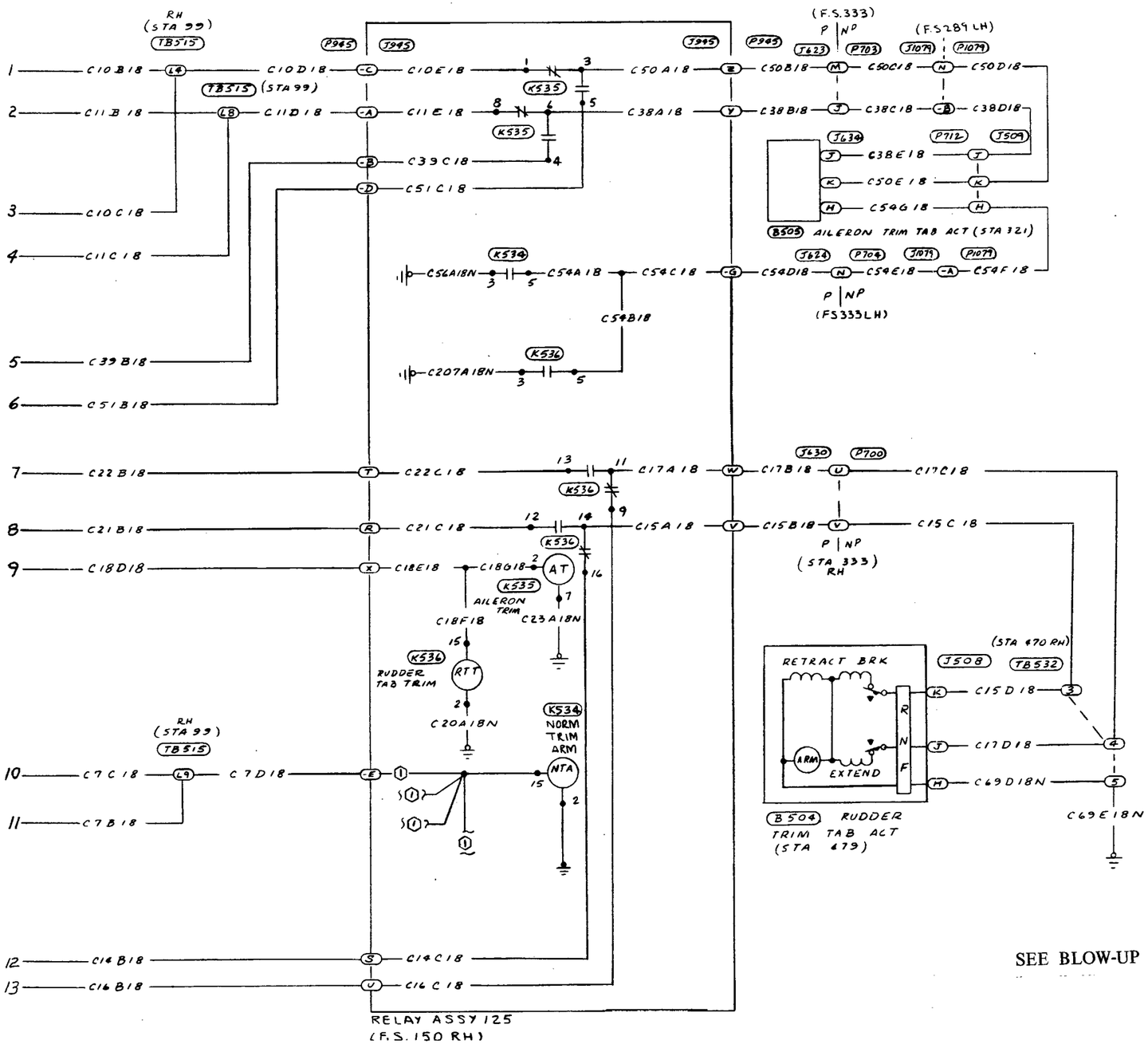

SEE BLOW-UP FICHE NO. ASE0539 - ITEM B

FLIGHT CONTROL TRIM SYSTEM
(380-1 Thru -43)
(Sheet 2 of 2)

© COPYRIGHT, 1981 BY ROCKWELL INTERNATIONAL

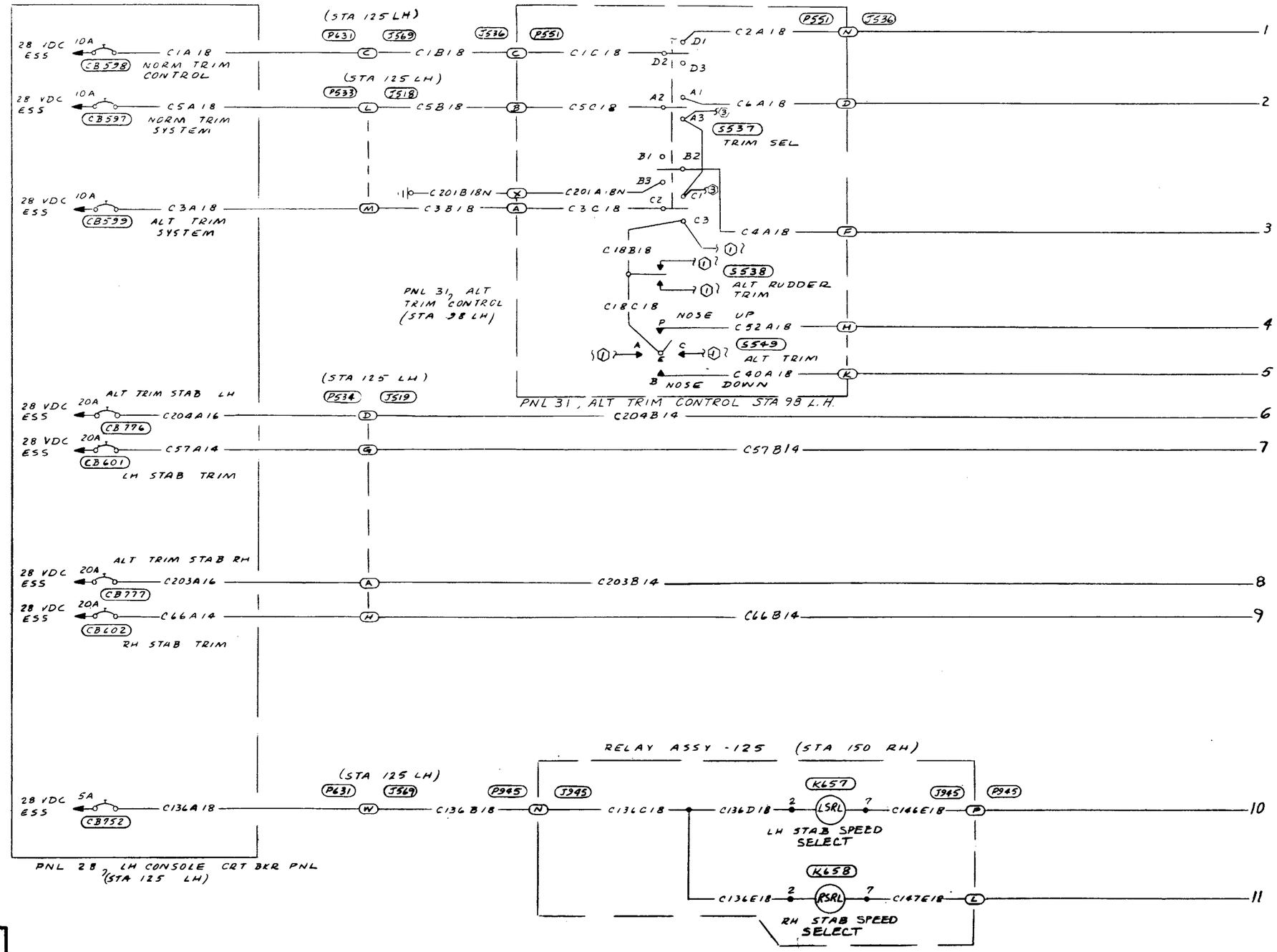

NOTES/LEGEND

1. L1.2-1 Flt Control Trim Sys.
2. E2.1 LDG Gear Pos Ind & Warn. Sys.
3. L1.1-3 Trim Disc Sys.

EFFECTIVITY

1. S/N 380-1 thru -37 not changed by S/B 74-7
2. S/N 380-1 thru -37 changed by S/B 74-7 and 380-38 thru -43
3. Deleted by SOK No. 27
4. Added by SOK No. 27

FLIGHT CONTROL TRIM SYSTEM
(S/N 380-1 thru -43)
(Sheet 1 of 3)

© COPYRIGHT, 1983 BY ROCKWELL INTERNATIONAL

L1.1-2	8	7

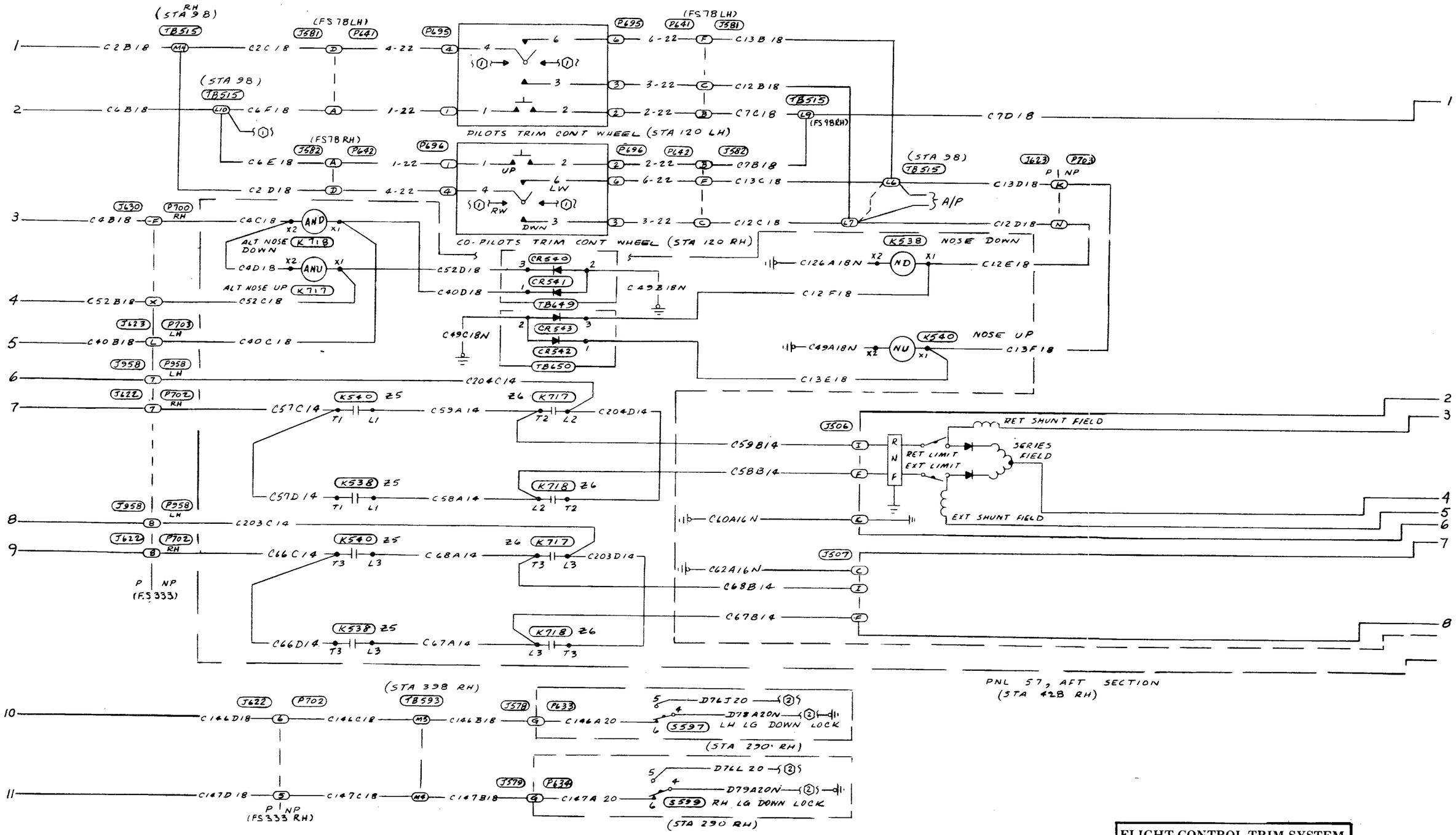

© COPYRIGHT, 1983 BY ROCKWELL INTERNATIONAL

FLIGHT CONTROL TRIM SYSTEM
(S/N 380-1 thru -43)
(Sheet 2 of 3)

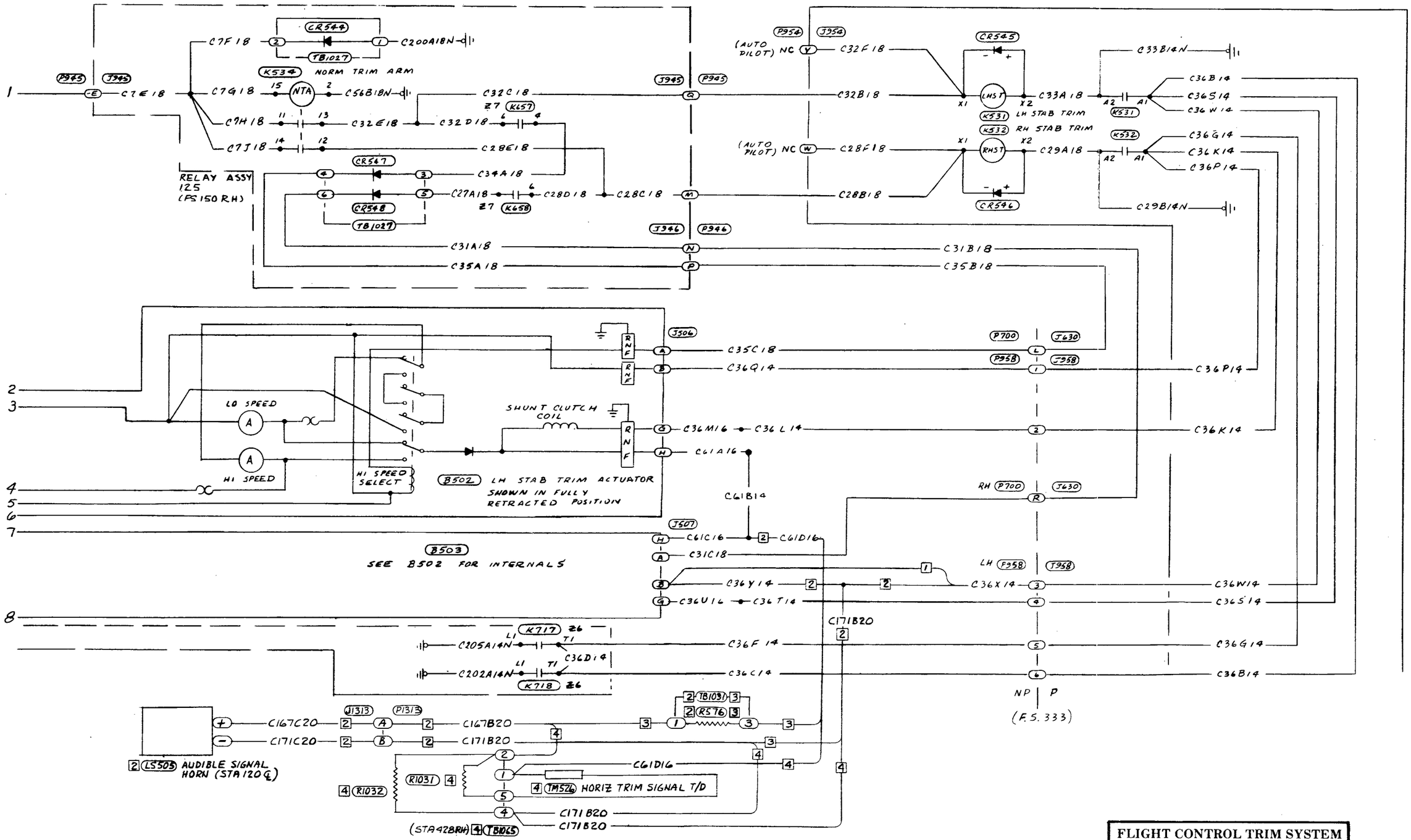

© COPYRIGHT, 1983 BY ROCKWELL INTERNATIONAL

FLIGHT CONTROL TRIM SYSTEM
(S/N 380-1 thru -43)
(Sheet 3 of 3)

4 | 3 | 2 | 1 | L1.1-2

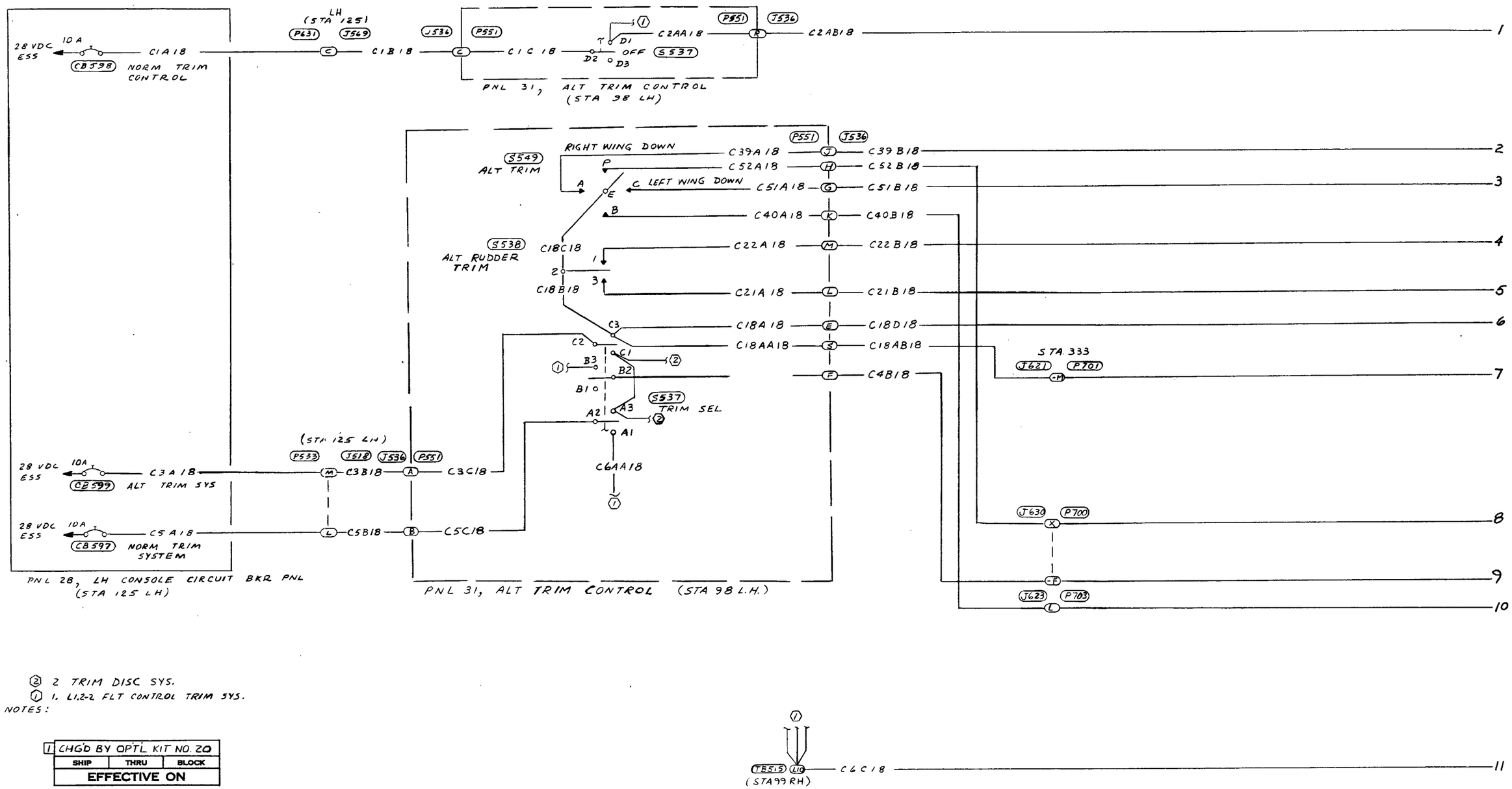

NOTES:

(2) 2 TRIM DISC SYS.
(1) 1. L1.2-2 FLT CONTROL TRIM SYS.

1	CHG'D BY OPT'L KIT NO. 20		
	SHIP	THRU	BLOCK
	EFFECTIVE ON		

FLIGHT CONTROL TRIM SYSTEM
(380-44 & Subs & Airplanes Modified by S/B 75-22)
(Sheet 1 of 2)

© COPYRIGHT, 1981 BY ROCKWELL INTERNATIONAL

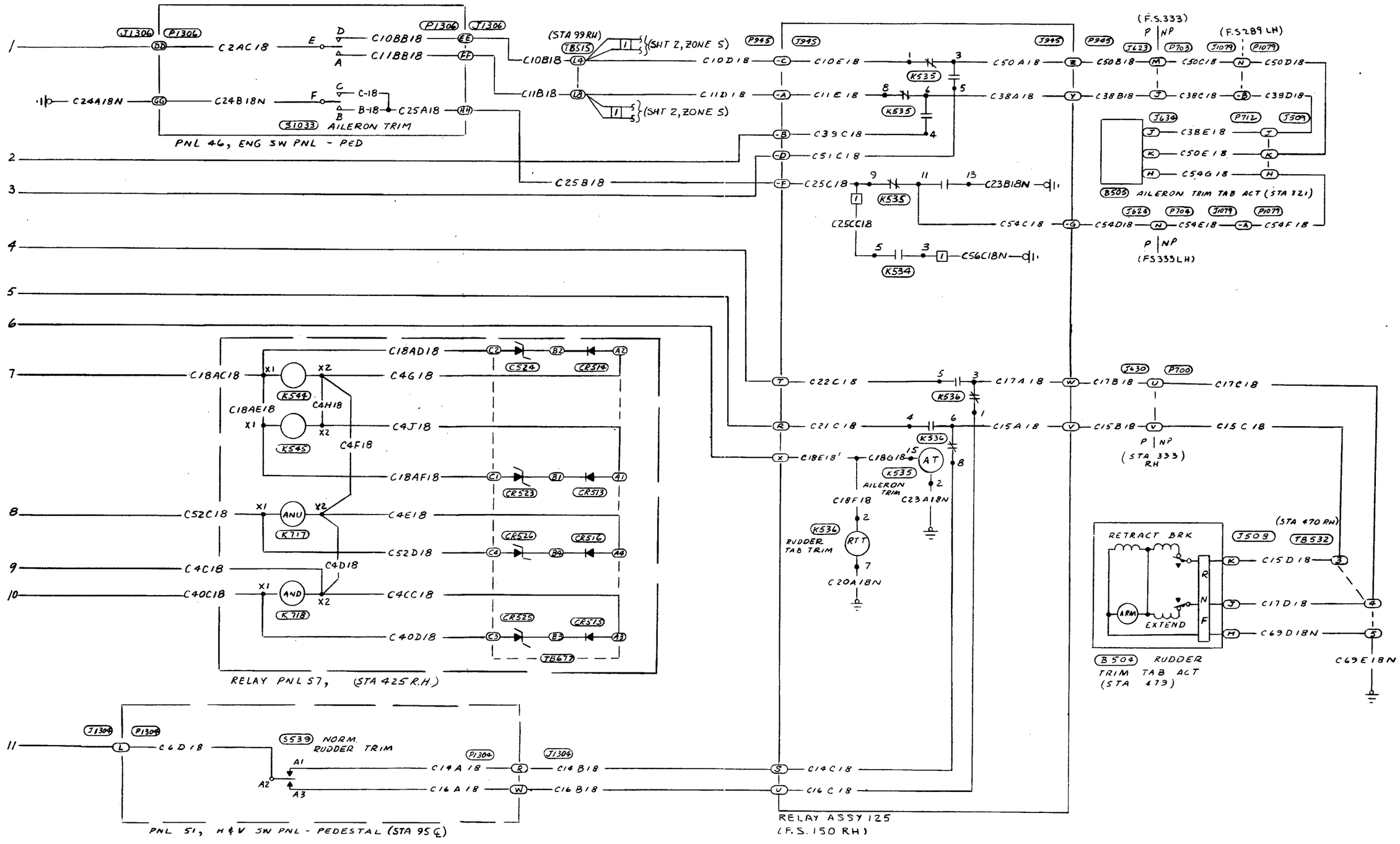

FLIGHT CONTROL TRIM SYSTEM
(380-44 & Subs & Airplanes Modifies by S/B 75-22)
(Sheet 2 of 2)

© COPYRIGHT, 1981 BY ROCKWELL INTERNATIONAL

NOTES/LEGEND

1. L1.2-1 Flt Control Trim Sys.
2. E2.1 LDG Gear Pos Ind & Warn. Sys.
3. L1.1-3 Trim Disc Sys.

EFFECTIVITY

1 Not changed by SOK No. 27
2 Changed by SOK No. 27
3 Changed by SOK No. 20

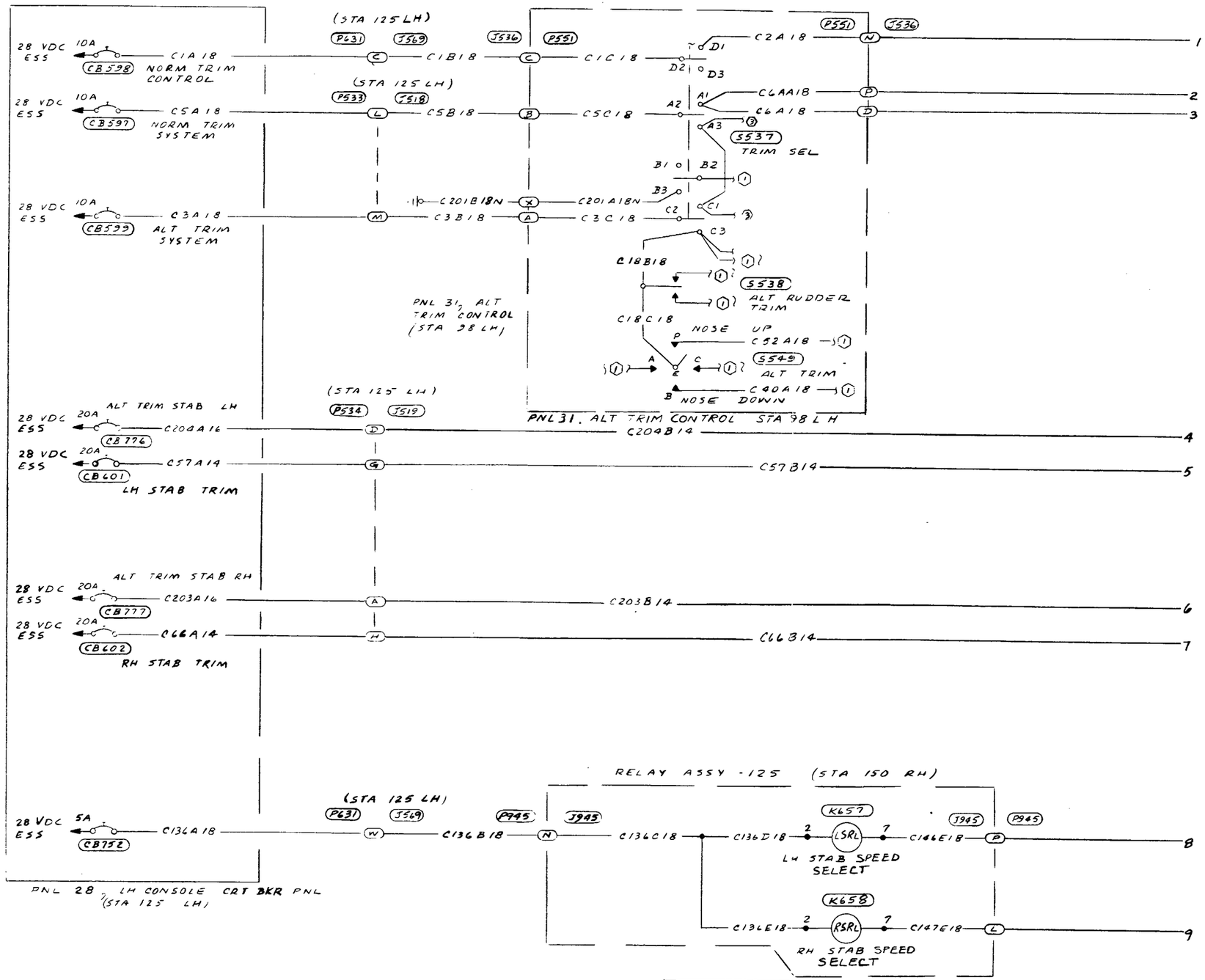

© COPYRIGHT, 1983 BY ROCKWELL INTERNATIONAL

FLIGHT CONTROL TRIM SYSTEM
(S/N 380-44 and Subs and Airplanes Modified by S/B 75-22)
(Sheet 1 of 3)

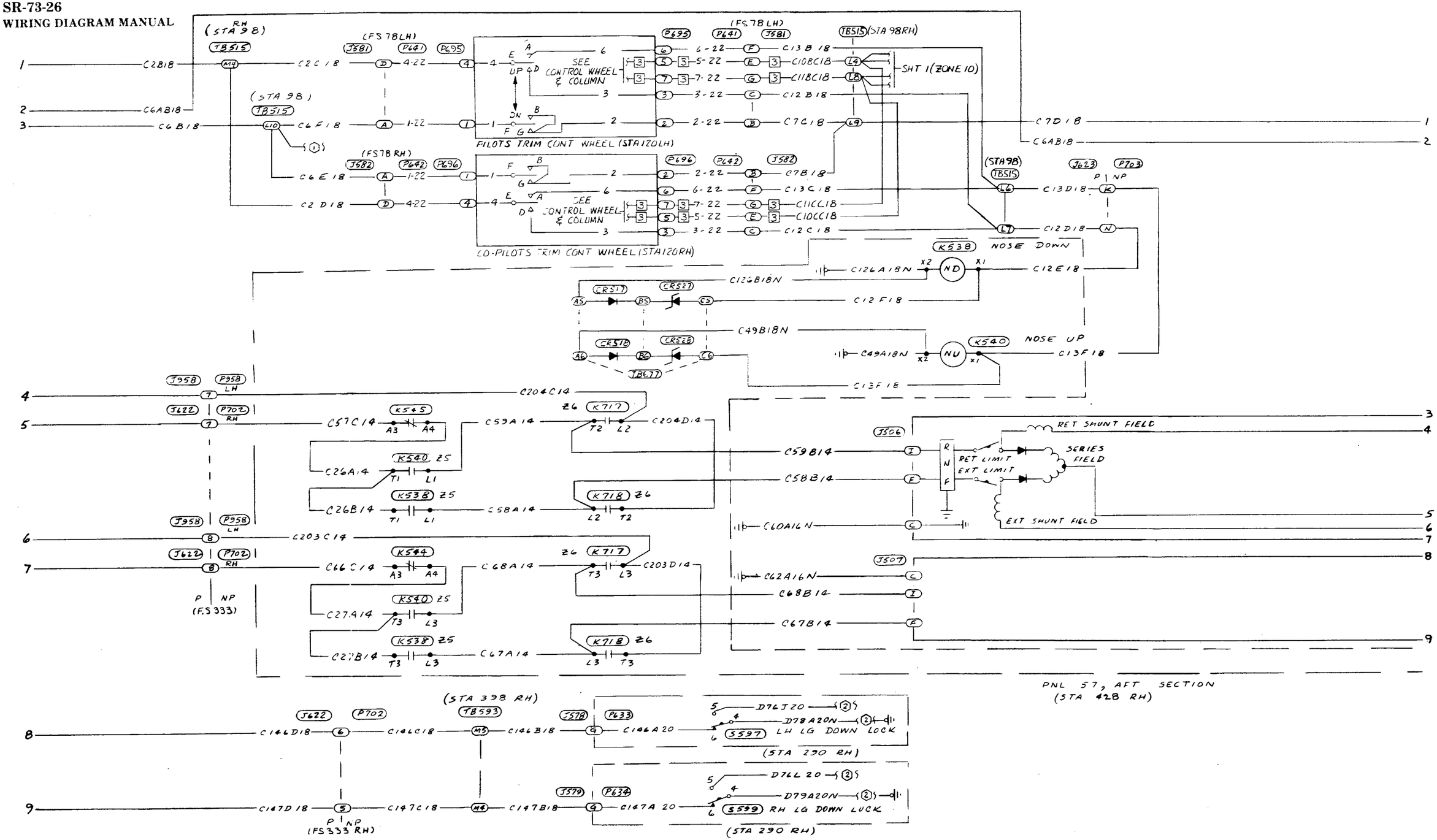

FLIGHT CONTROL TRIM SYSTEM
(S/N 380-44 and Subs and Airplanes Modified by S/B 75-22)
(Sheet 2 of 3)

© COPYRIGHT, 1983 BY ROCKWELL INTERNATIONAL

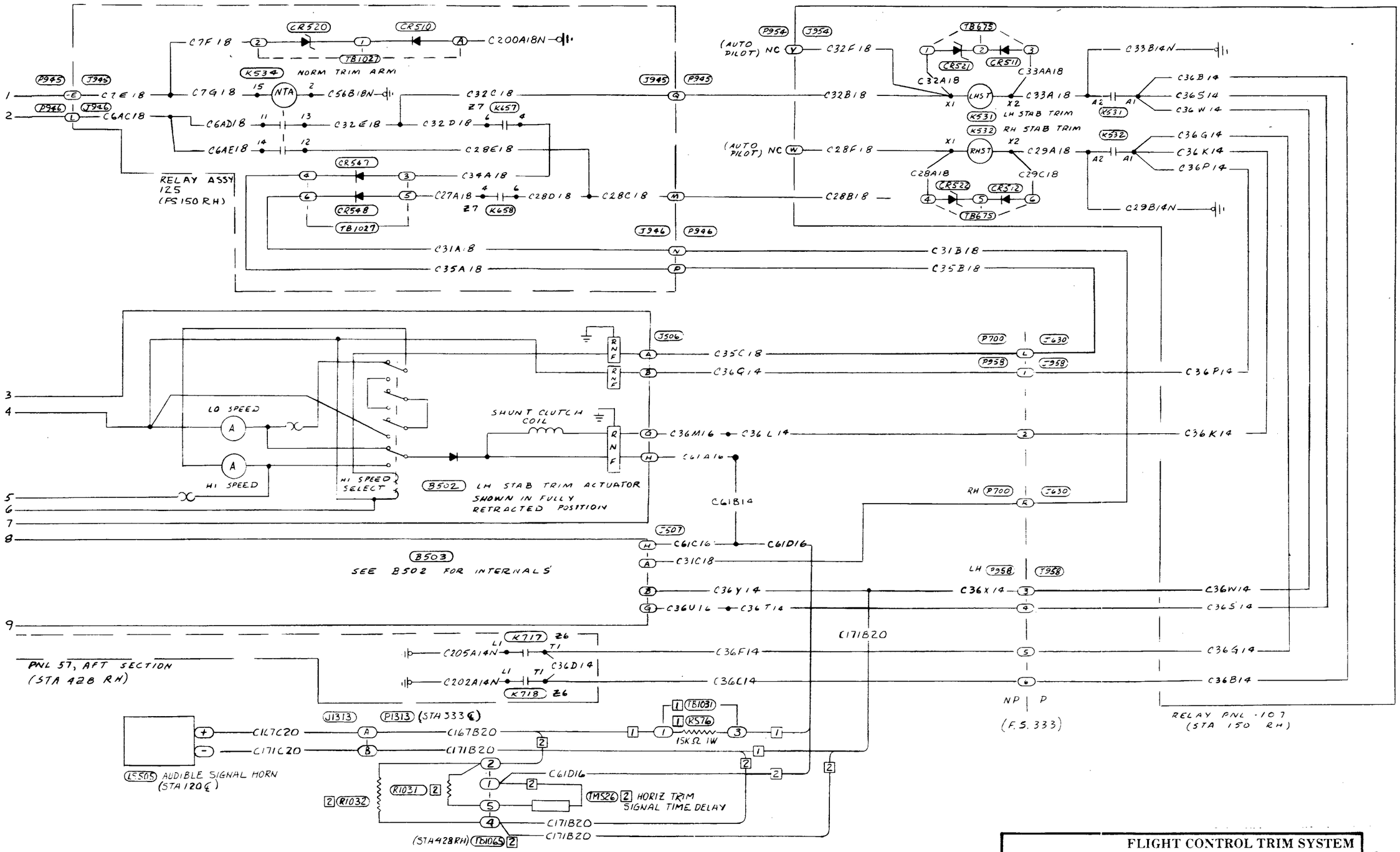

© COPYRIGHT, 1983 BY ROCKWELL INTERNATIONAL

FLIGHT CONTROL TRIM SYSTEM
(S/N 380-44 and Subs and Airplanes Modified by S/B 75-22)
(Sheet 3 of 3)

4	3	2	1	L1.2-2

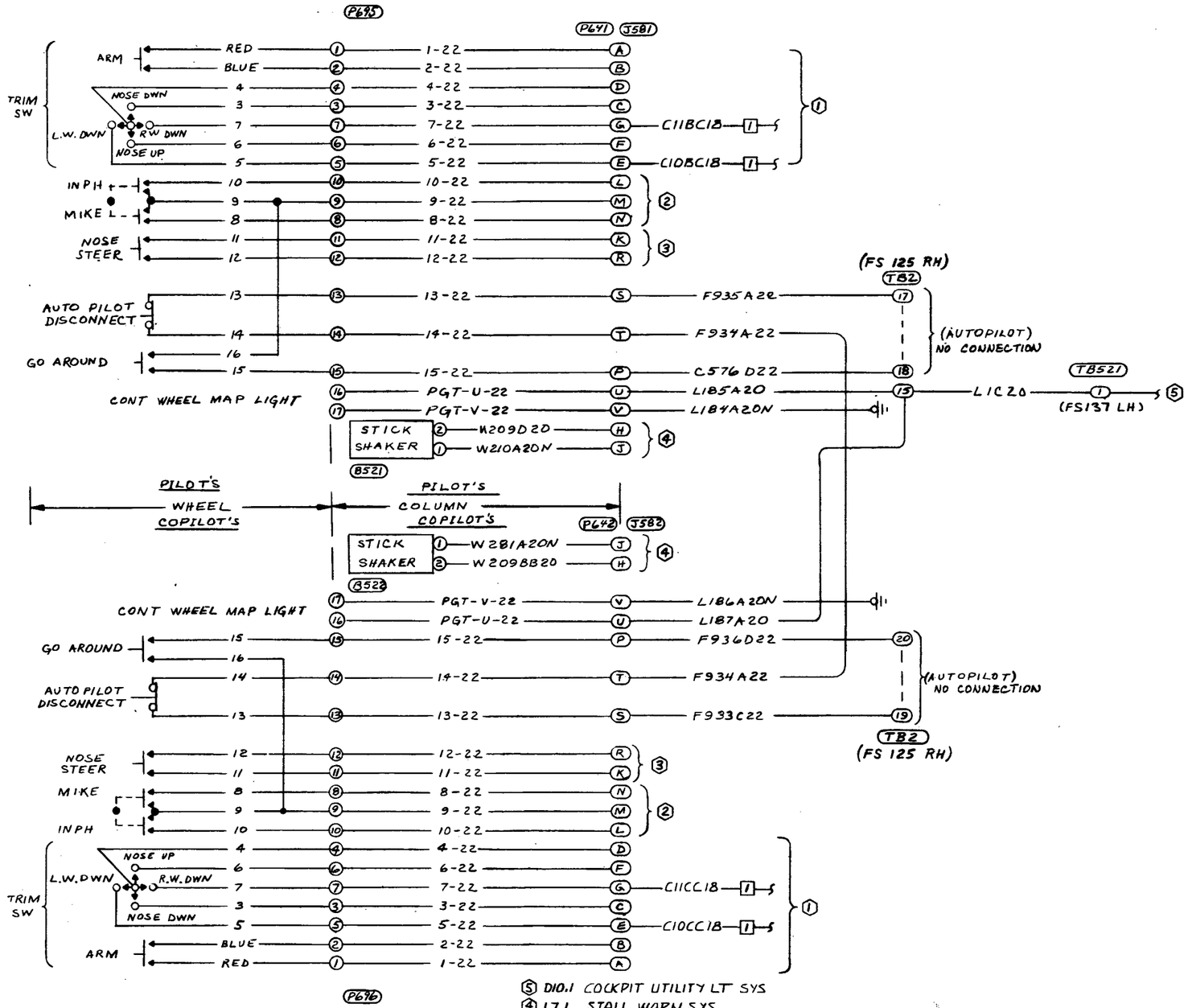

NOTES:

(5) D10.1 COCKPIT UTILITY LT SYS
(4) L7.1 STALL WARN SYS
(3) E3.1 NOSE GR STEER SYS
(2) R1.1-1 AUDIO SYS-PROVISIONS
(1) L1.1 FLT CONT TRIM SYS

1	CHGD BY OPTL KIT NO. 20		
SHIP	THRU	MODEL	
EFFECTIVE ON			

© COPYRIGHT, 1981 BY ROCKWELL INTERNATIONAL

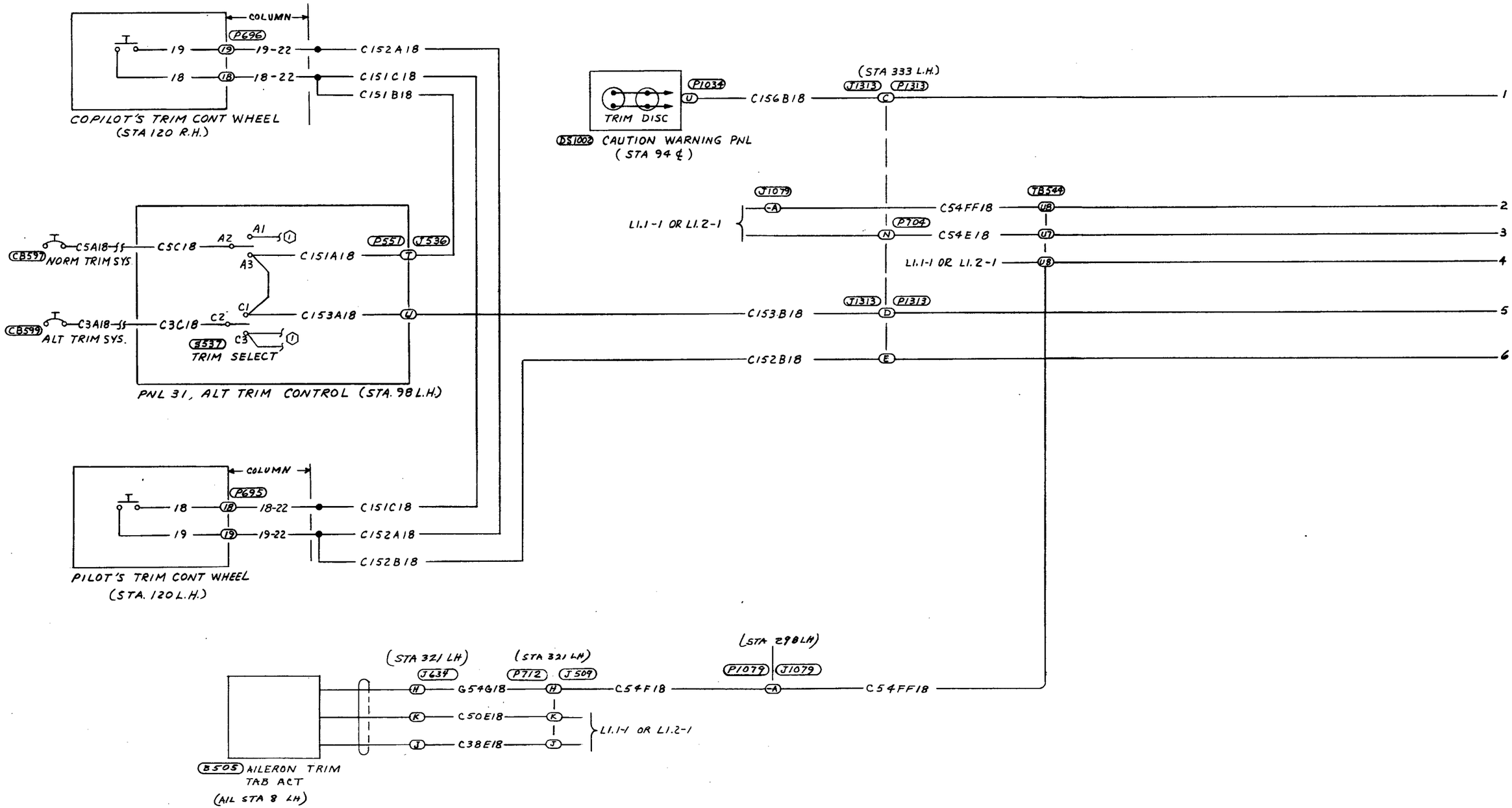

① L1.1-1, L1.1-2, L1.2-1 & L1.2-2
FLT CONT TRIM SYS.

NOTES:

TRIM DISCONNECT SYSTEM
(380-1 & Subs Modified by S/B 74-6)
(Sheet 1 of 2)

© COPYRIGHT, 1981 BY ROCKWELL INTERNATIONAL

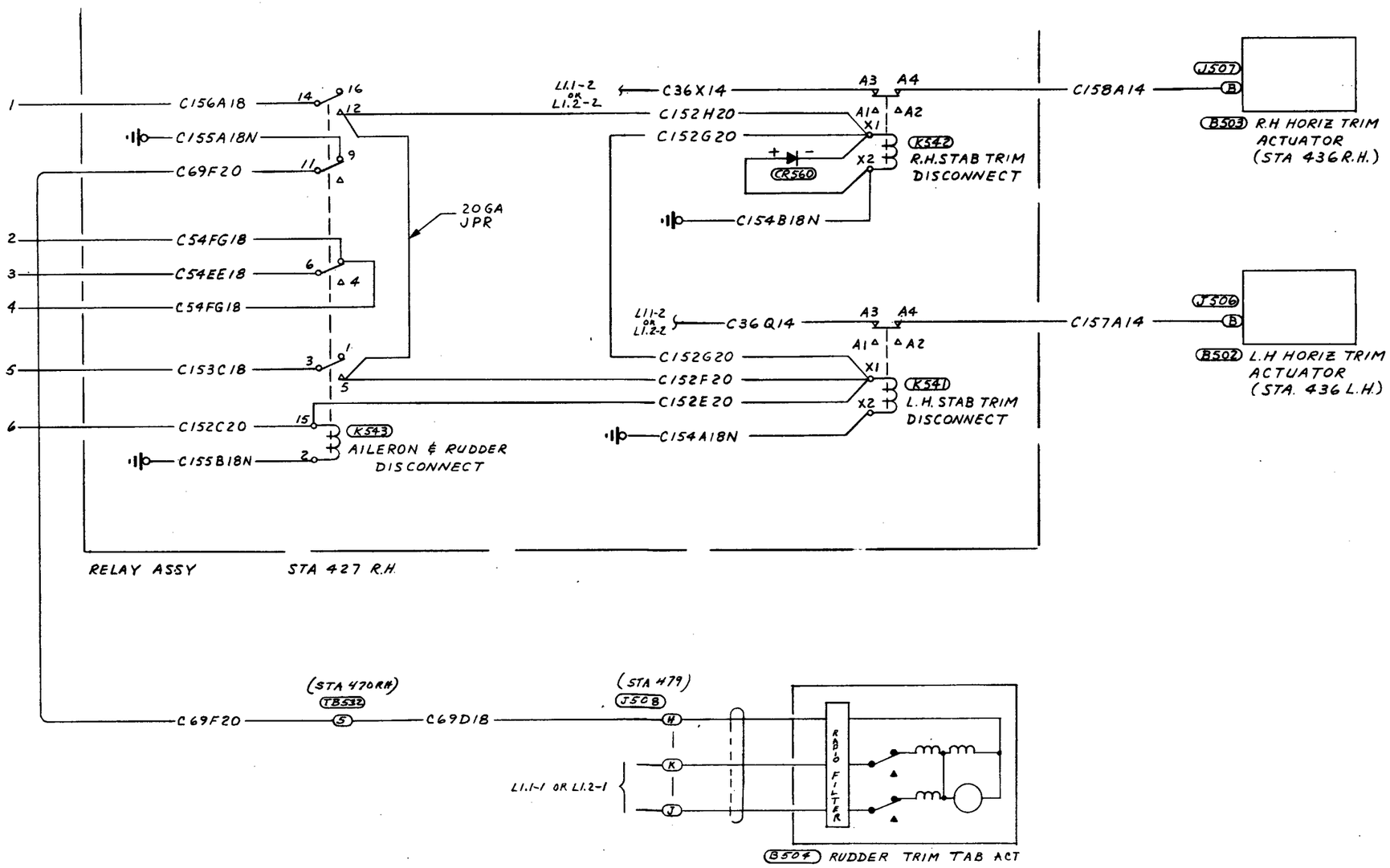

TRIM DISCONNECT SYSTEM
(380-1 & Subs Modified by S/B 74-6)
(Sheet 2 of 2)

© COPYRIGHT, 1981 BY ROCKWELL INTERNATIONAL

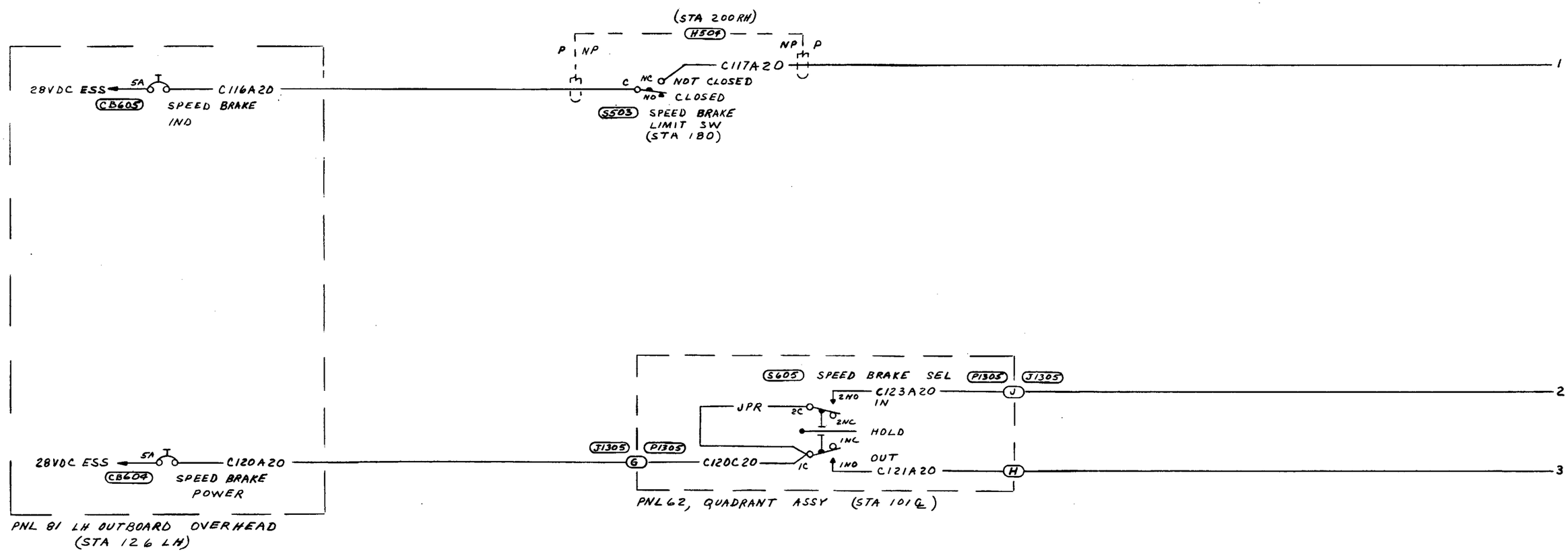

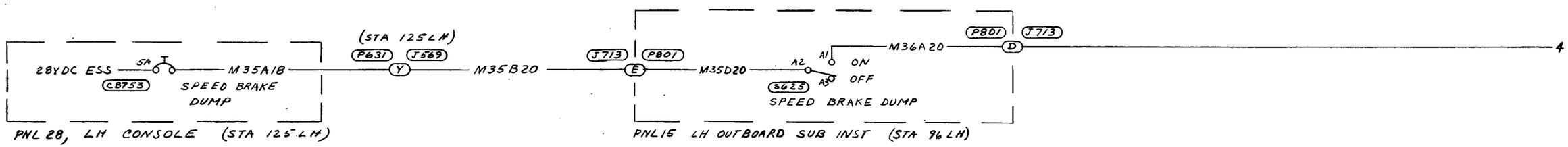

2	380-5, 10, 12 & SUBS	
1	380-1-4, 6-9, & 11	
SHIP	THRU	BLOCK
EFFECTIVE ON		

SPEED BRAKE SYSTEM
(Sheet 1 of 2)

© COPYRIGHT, 1981 BY ROCKWELL INTERNATIONAL

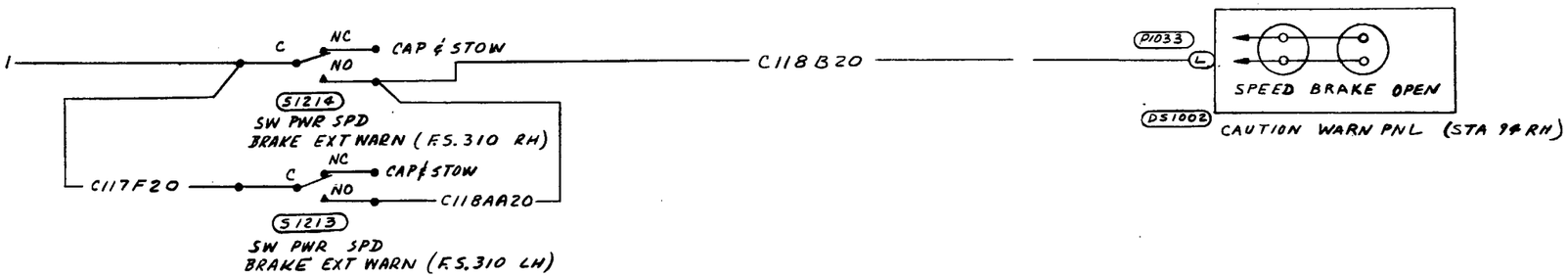

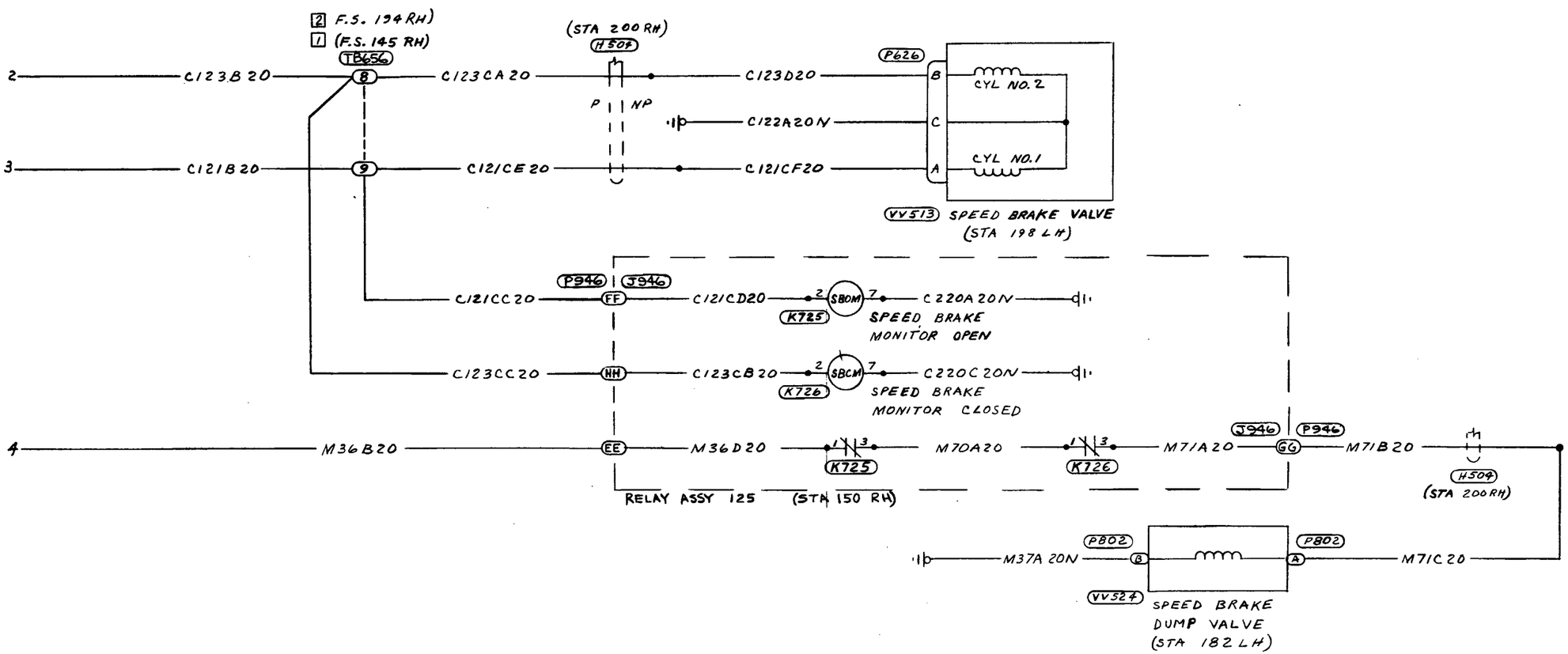

SPEED BRAKE SYSTEM
(Sheet 2 of 2)

© COPYRIGHT, 1981 BY ROCKWELL INTERNATIONAL

CHAPTER

28

FUEL

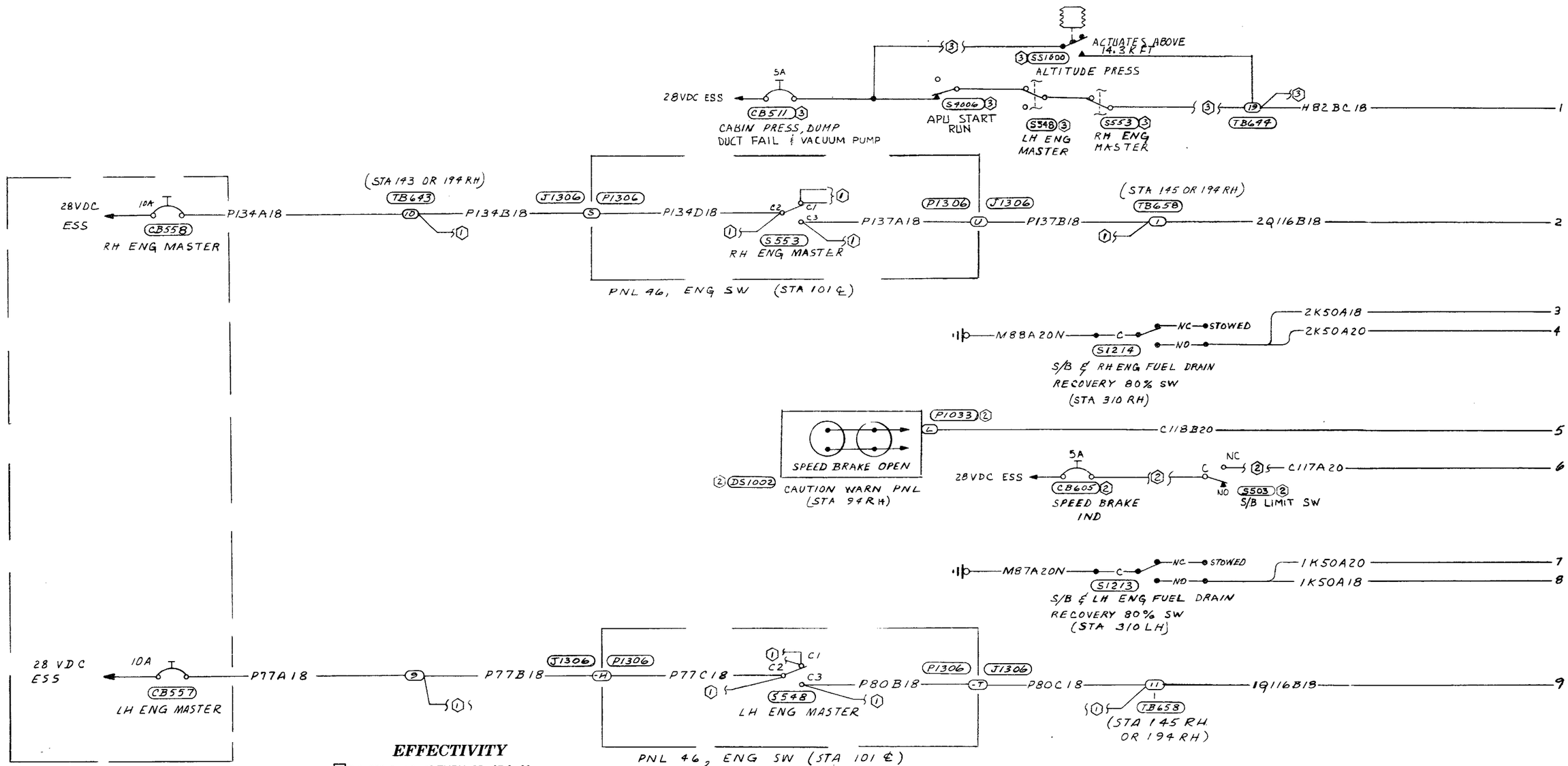

EFFECTIVITY

1. S/N 380-5, -10, -12 THRU -35, -37 & -38
2. S/N 380-1 THRU -4, -6 THRU -9 & -11
3. S/N 380-24, -26, -28, -29, -31 THRU -35
4. S/N 380-5, -10, -12 THRU -23, -25, -27 & -30
5. S/N 380-36, -39 & SUBS
6. S/N 380-1 THRU -35, -37 & -38
7. S/N 380-58 & SUBS AND S/N 380-1 THRU -57 WITH S/L 81-23 INSTALLED

NOTES/LEGEND

1. C9.1 ENGINE START SYSTEM
2. L3.1 SPEED BRAKE SYSTEM
3. F6.1 VACUUM PUMP SYSTEM
4. S/B 75-2 IS INCORPORATED

FUEL DRAIN RECOVERY SYSTEM
(Sheet 1 of 2)

© COPYRIGHT, 1987 BY SABRELINER CORPORATION

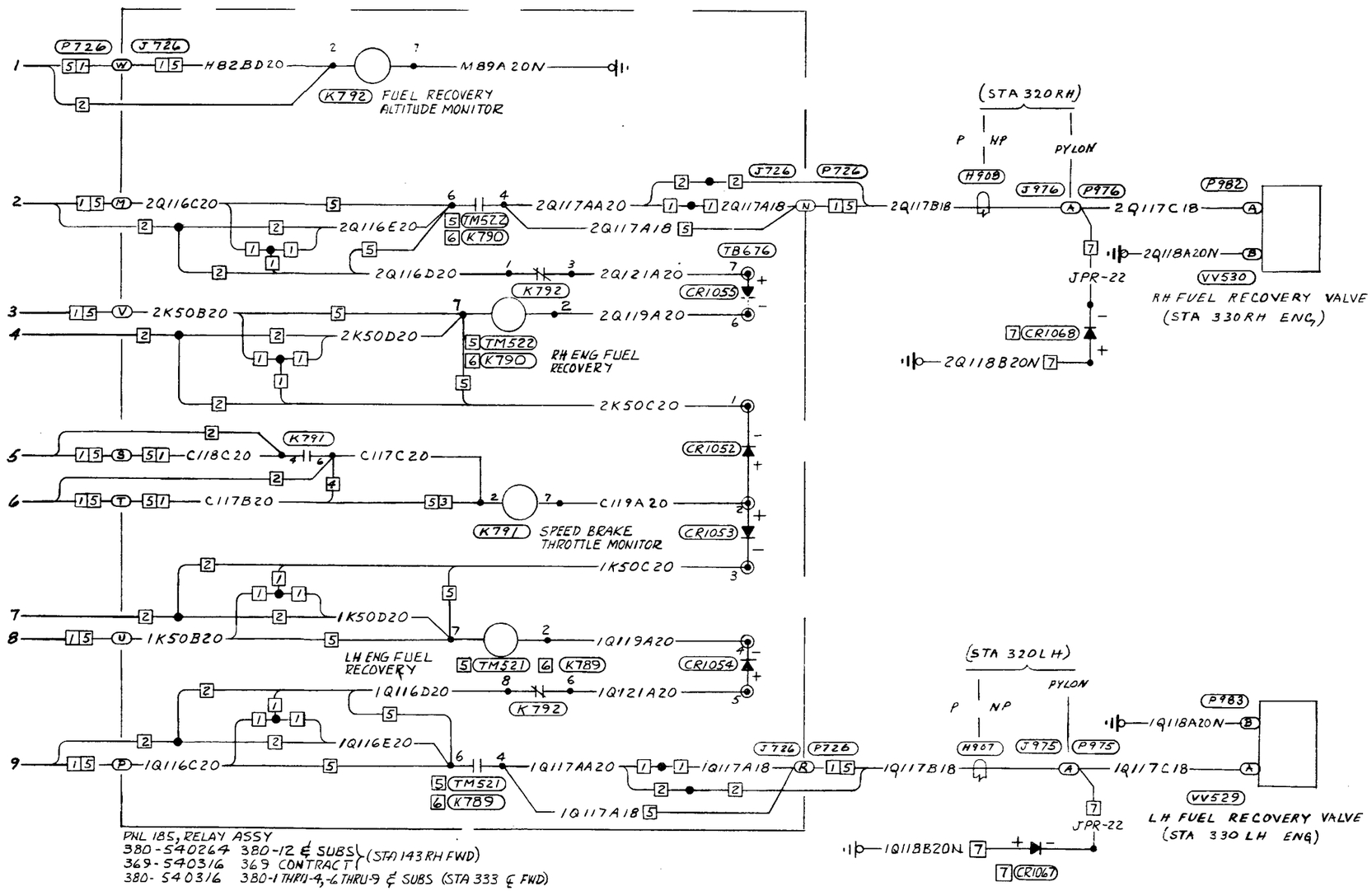

© COPYRIGHT, 1987 BY SABRELINER CORPORATION

FUEL DRAIN RECOVERY SYSTEM
(Sheet 2 of 2)

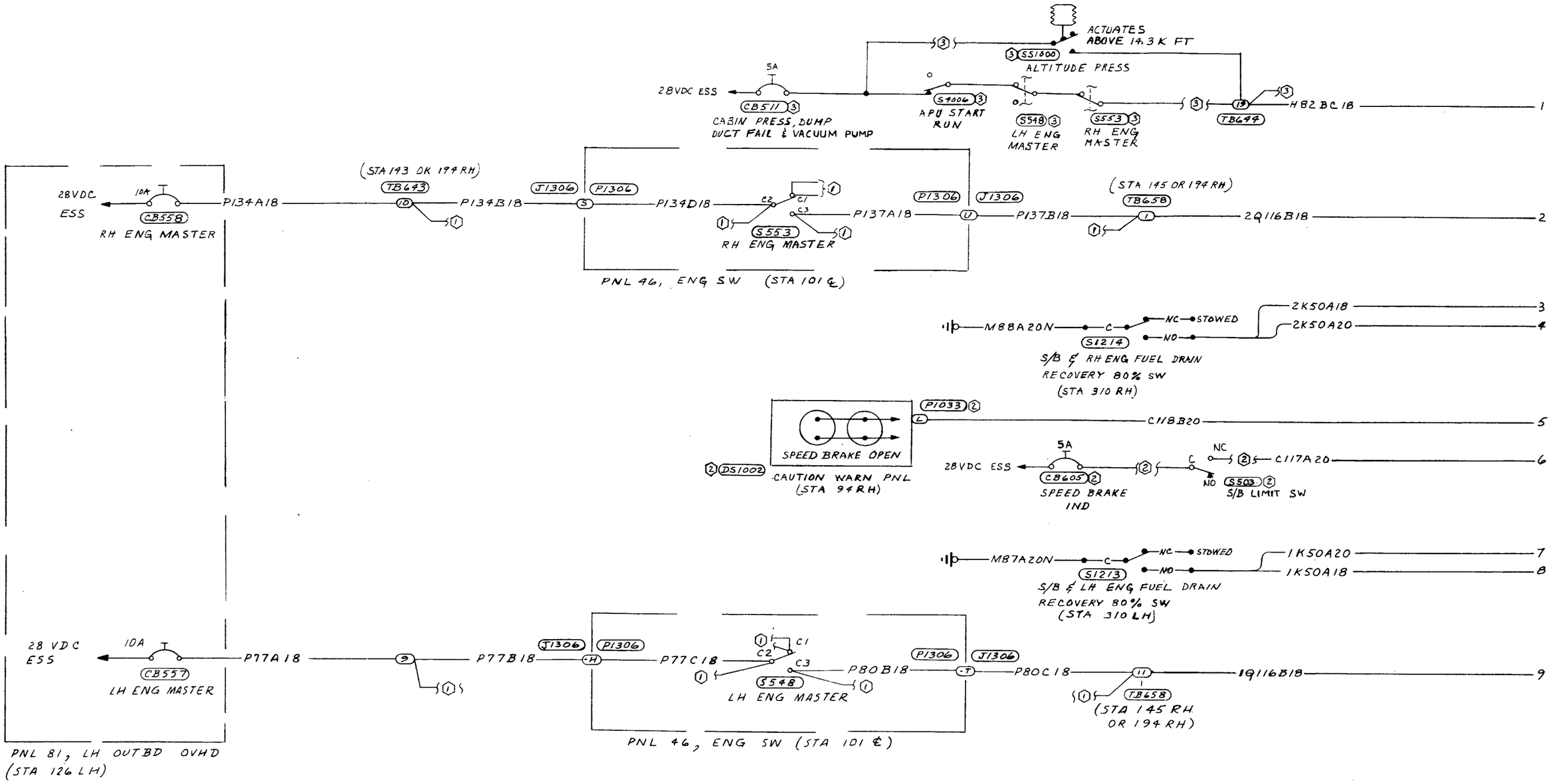

NOTES/LEGEND

1. C9.1 ENGINE START SYSTEM
2. L3.1 SPEED BRAKE SYSTEM
3. F6.1 VACUUM PUMP SYSTEM
4. S/B 75-2 IS INCORPORATED

EFFECTIVITY

1. S/N 380-5, -10, -12 THRU -35, -37 & -38
2. S/N 380-1 THRU -4, -6 THRU -9 & -11
3. AIRPLANES MODIFIED BY S/L 81-23

FUEL DRAIN RECOVERY SYSTEM
(S/N 380-1 Thru -35, -37 & -38 Changed by SOK 6)
(Sheet 1 of 2)

© COPYRIGHT, 1986 BY SABRELINER CORPORATION

C9.2	8	7	6	5

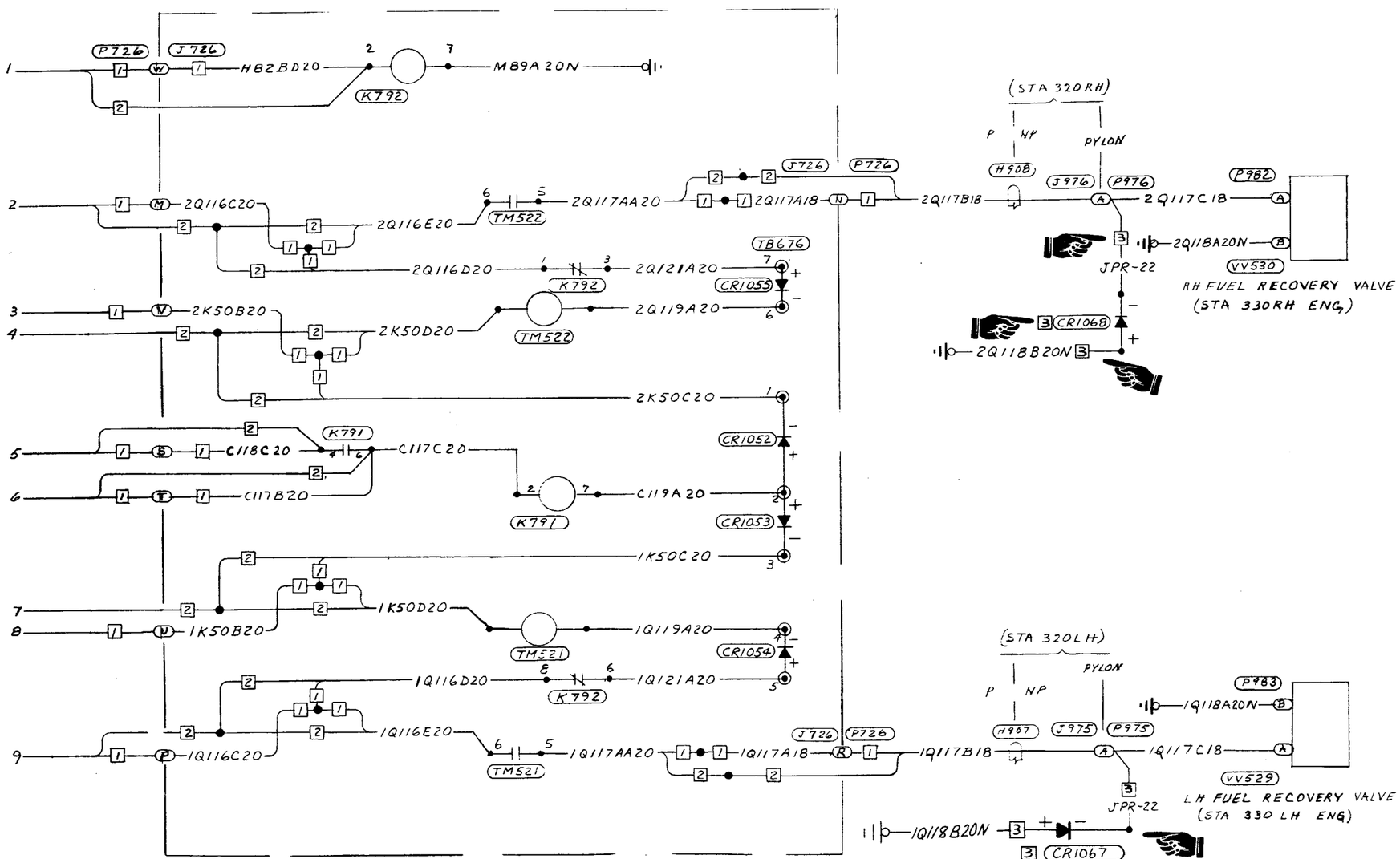

FUEL DRAIN RECOVERY SYSTEM
(S/N 380-1 Thru -35, -37 & -38 Changed by SOK 6)
(Sheet 2 of 2)

28-10-1

© COPYRIGHT, 1986 BY SABRELINER CORPORATION

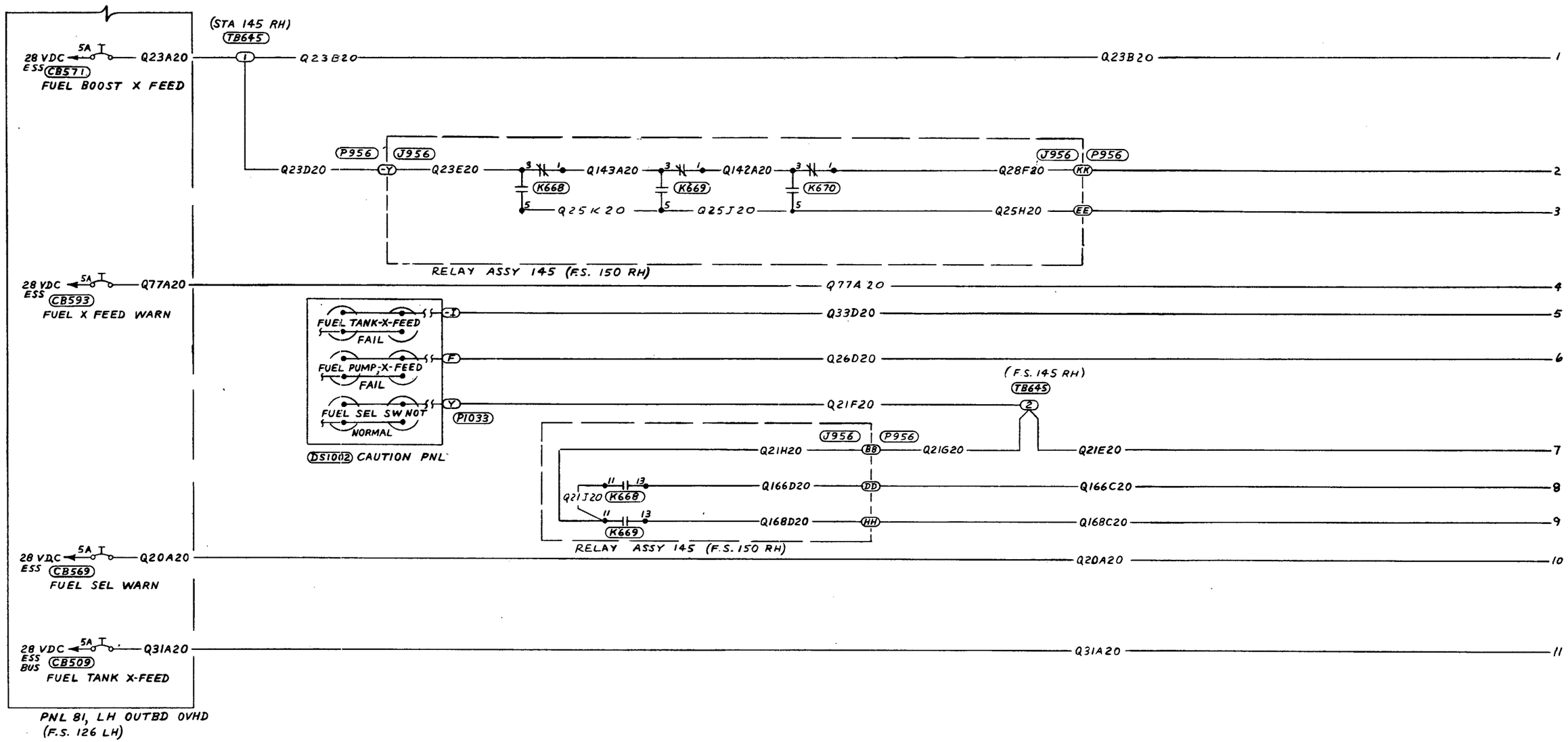

NOTES:

(2) FOR DETAIL GRD CIRCUIT SEE B7.1 ELECTICAL GROUND SYSTEM

(1) FOR ACTUATION - SEE C2.1 FUEL BOOST SYSTEM

FUEL CROSS FEED SYSTEM
(380-1 Thru -4, -6 Thru -9, & -11)
(Sheet 1 of 2)

© COPYRIGHT, 1981 BY ROCKWELL INTERNATIONAL

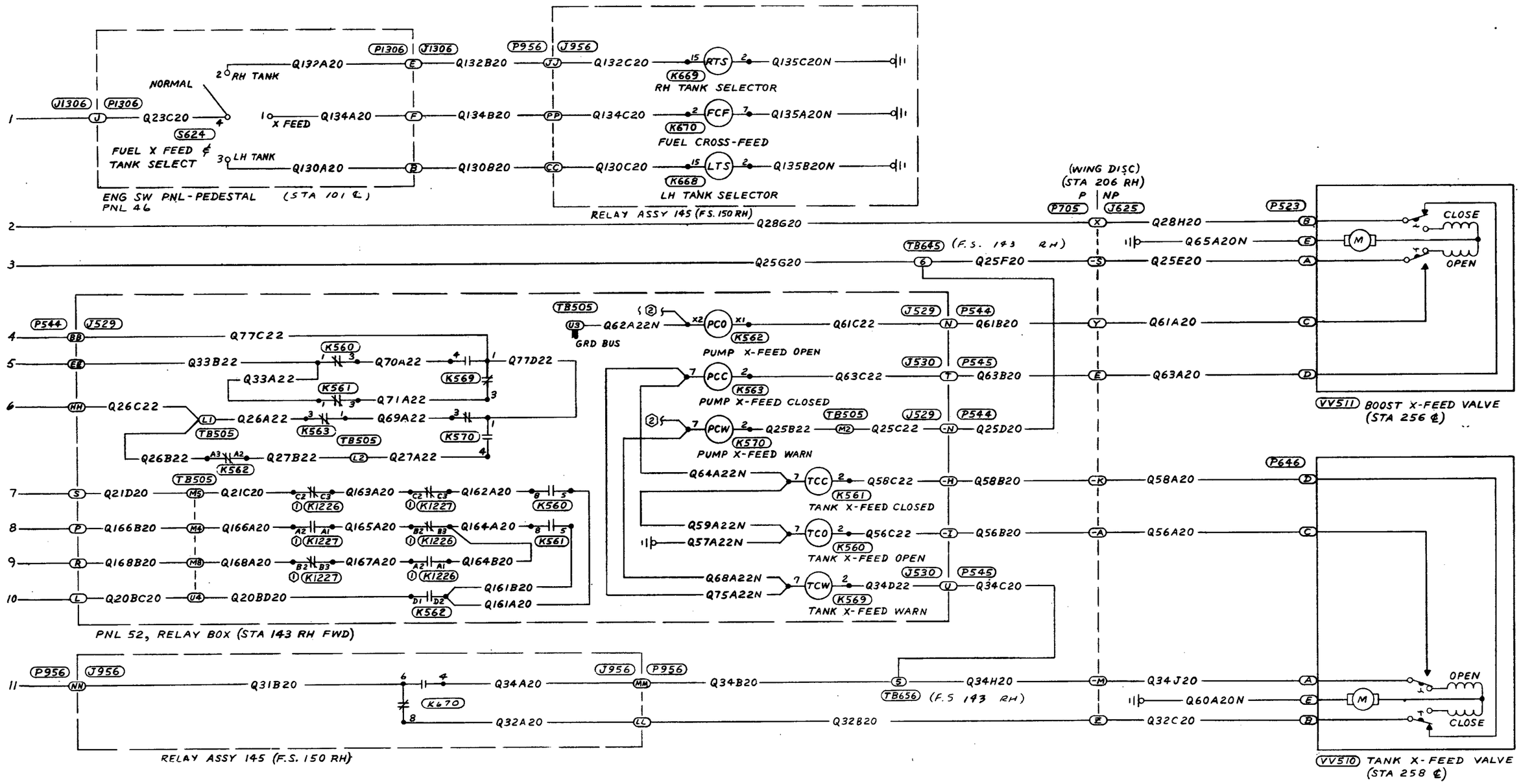

FUEL CROSS FEED SYSTEM
(380-1 Thru -4, -6 Thru -9, & -11)
(Sheet 2 of 2)

© COPYRIGHT, 1981 BY ROCKWELL INTERNATIONAL

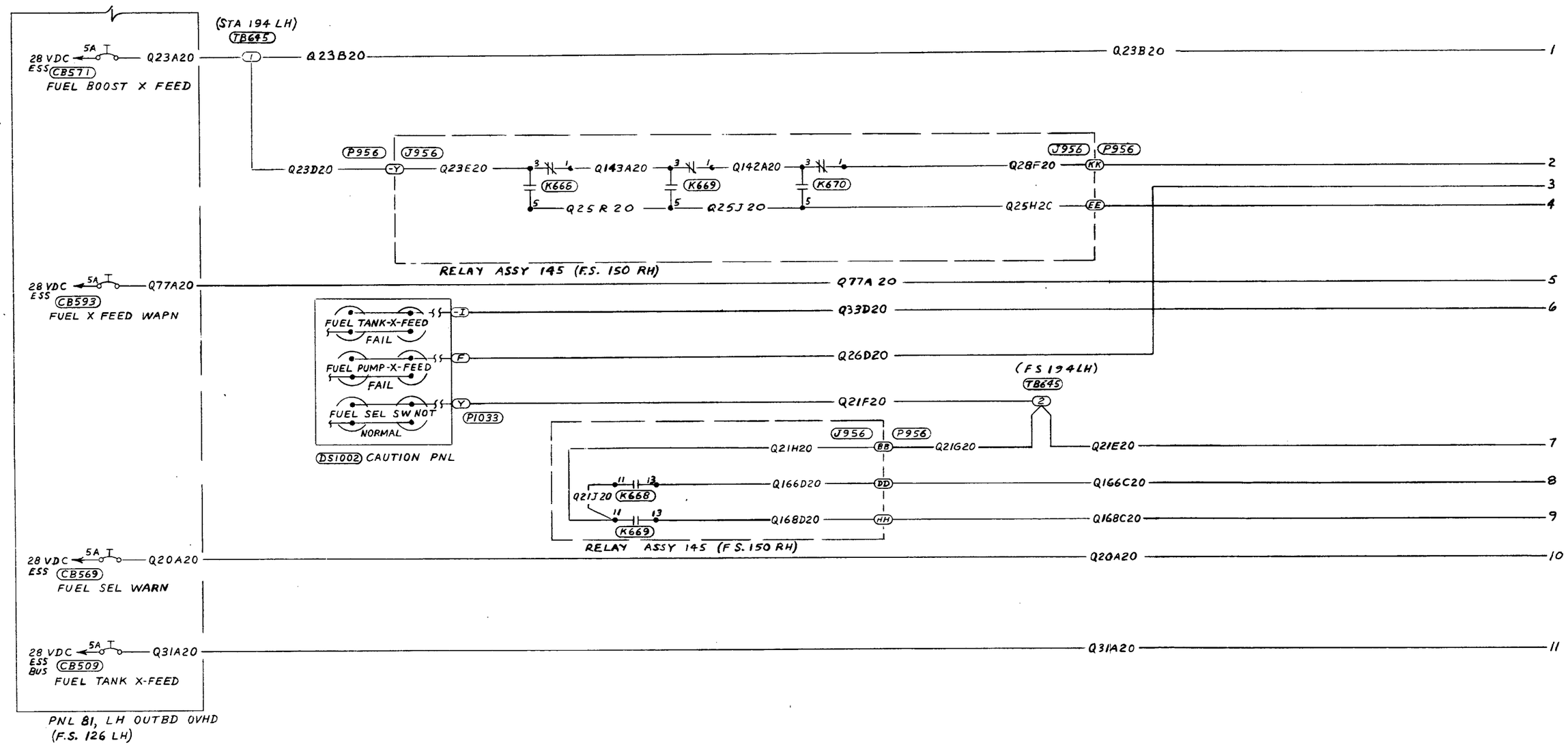

NOTES:

(2) FOR DETAIL GRD CIRCUIT SEE B7.1 ELECTICAL GROUND SYSTEM
(1) FOR ACTUATION - SEE C2.1 FUEL BOOST SYSTEM

2	380-70		
1	380-5, 10 & 12 THRU 69 71 & 72		
	SHIP	THRU	BLOCK
	EFFECTIVE ON		

FUEL CROSS FEED SYSTEM
(380-5, -10, -12, & Subs)
(Sheet 1 of 2)

© COPYRIGHT, 1981 BY ROCKWELL INTERNATIONAL

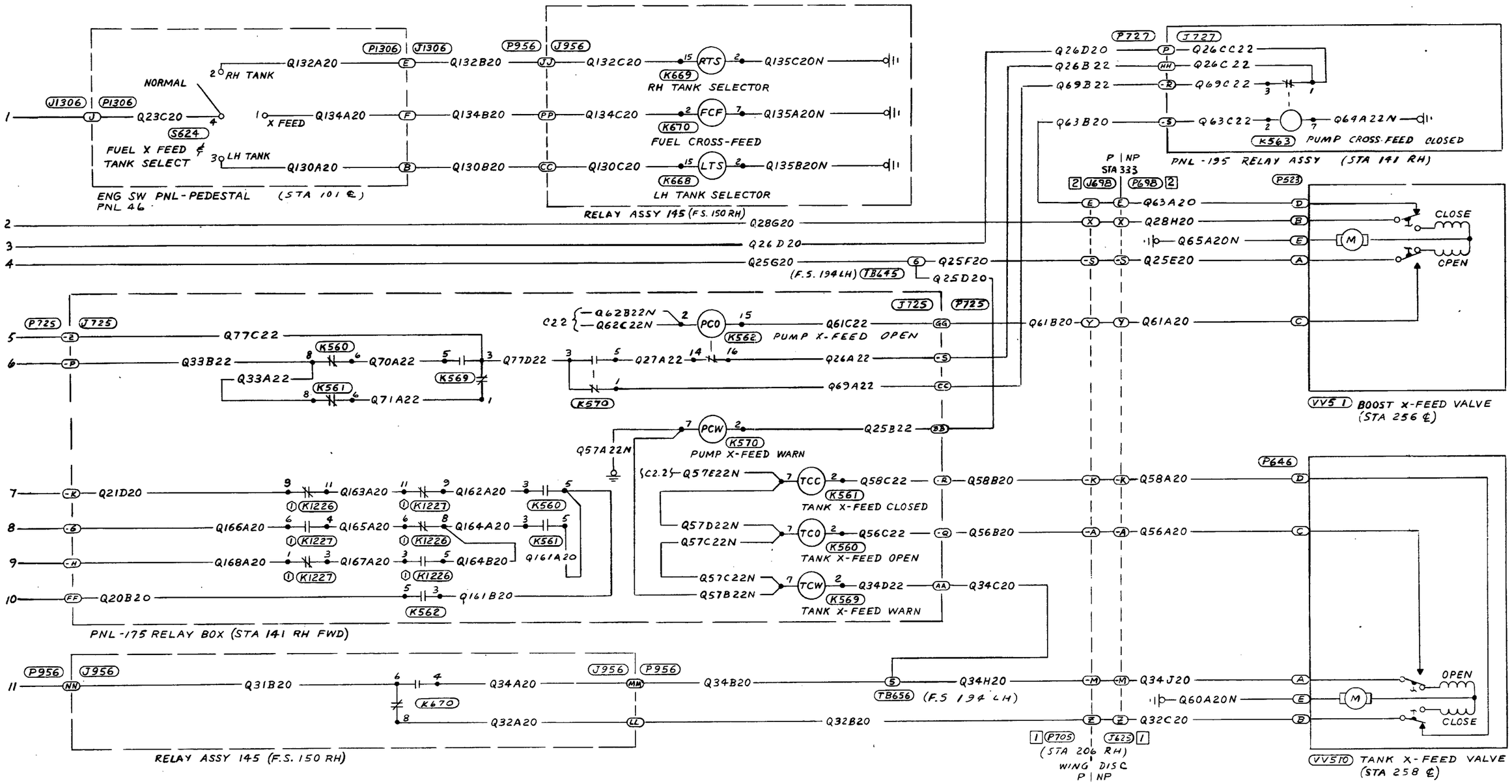

FUEL CROSS FEED SYSTEM
(380-5, -10, -12, & Subs)
(Sheet 2 of 2)

© COPYRIGHT, 1981 BY ROCKWELL INTERNATIONAL

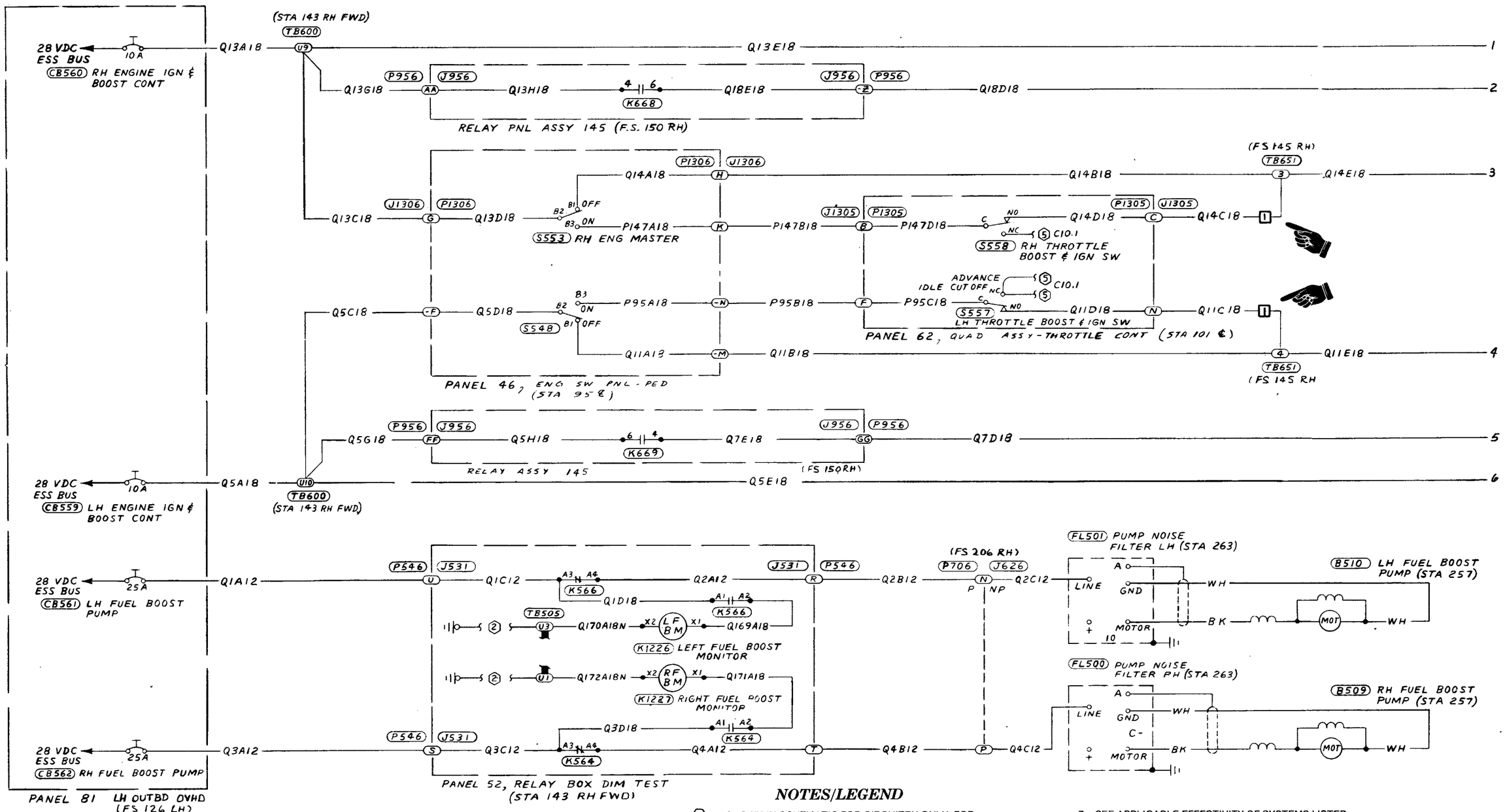

NOTES/LEGEND

1. SHOWN IN SCHEMATIC FOR CIRCUITRY ONLY, FOR DETAIL CIRCUIT, SEE C1.1
2. FOR DETAIL GROUND CIRCUIT, SEE B7.1
3. FOR ACTUATION OF RELAY CONTACTS, SEE E2.1
4. FOR ACTUATION OF RELAY CONTACTS, SEE C1.1
5. ENGINE IGNITION SYSTEM (C10.1)
6. WIRE DISCONNECTED FROM J1305, CAPPED AND STOWED IF SOK 81-4 IS INSTALLED.
7. SEE APPLICABLE EFFECTIVITY OF SYSTEMS LISTED BELOW:
   - B7.1 ELECTRICAL GROUND SYSTEM
   - C1.1 FUEL CROSS FEED SYSTEM
   - C9.1 ENGINE STARTING SYSTEM
   - E2.1 LANDING GEAR POSITION INDICATING SYSTEM

FUEL BOOST PUMP
S/N 380-1 Thru -4, -6 Thru -9 & -11
(Sheet 1 of 2)

© COPYRIGHT, 1987 BY SABRELINER CORPORATION

C2.1	8	7	6	5

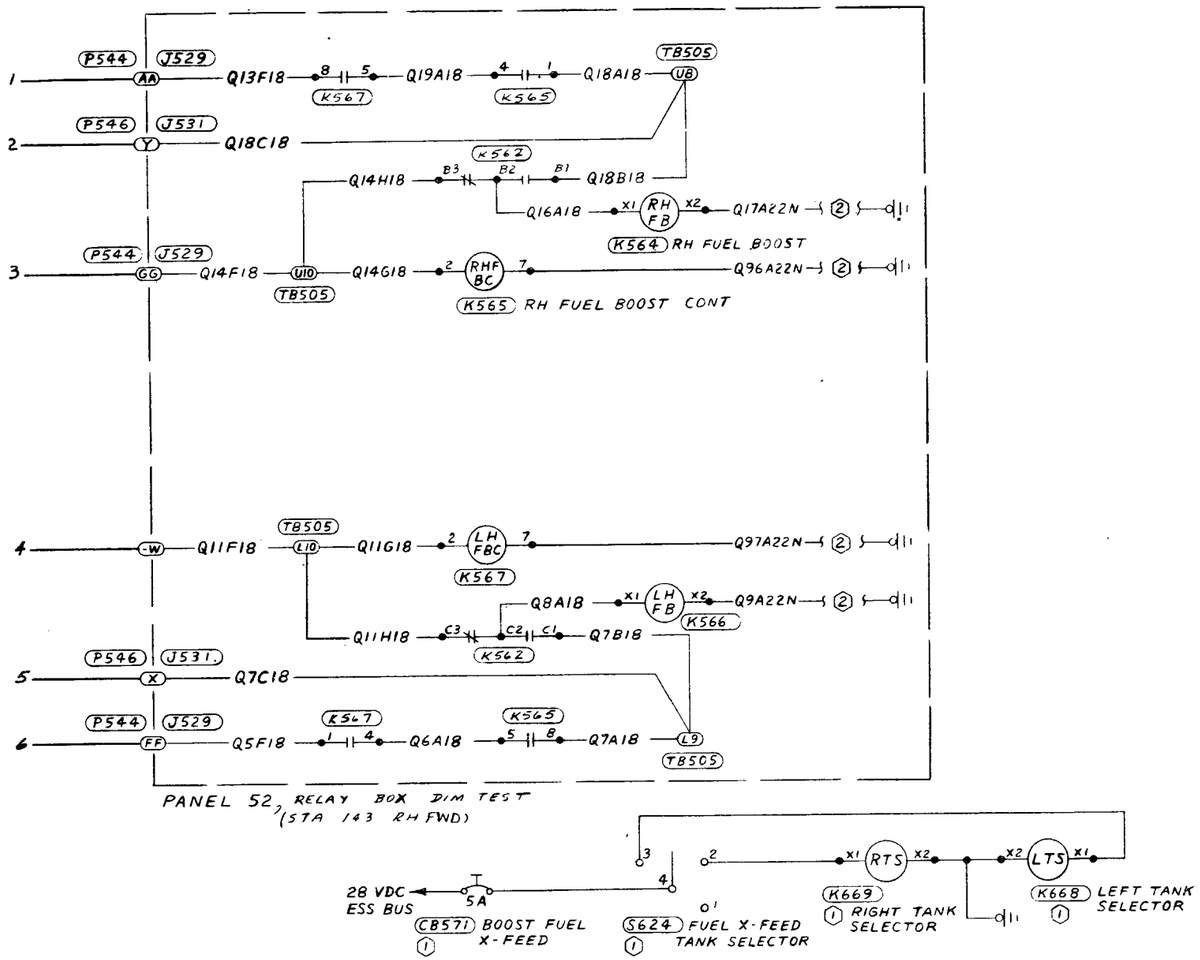

© COPYRIGHT, 1987 BY SABRELINER CORPORATION

FUEL BOOST PUMP
S/N 380-1 Thru -4, -6 Thru -9 & -11
(Sheet 2 of 2)

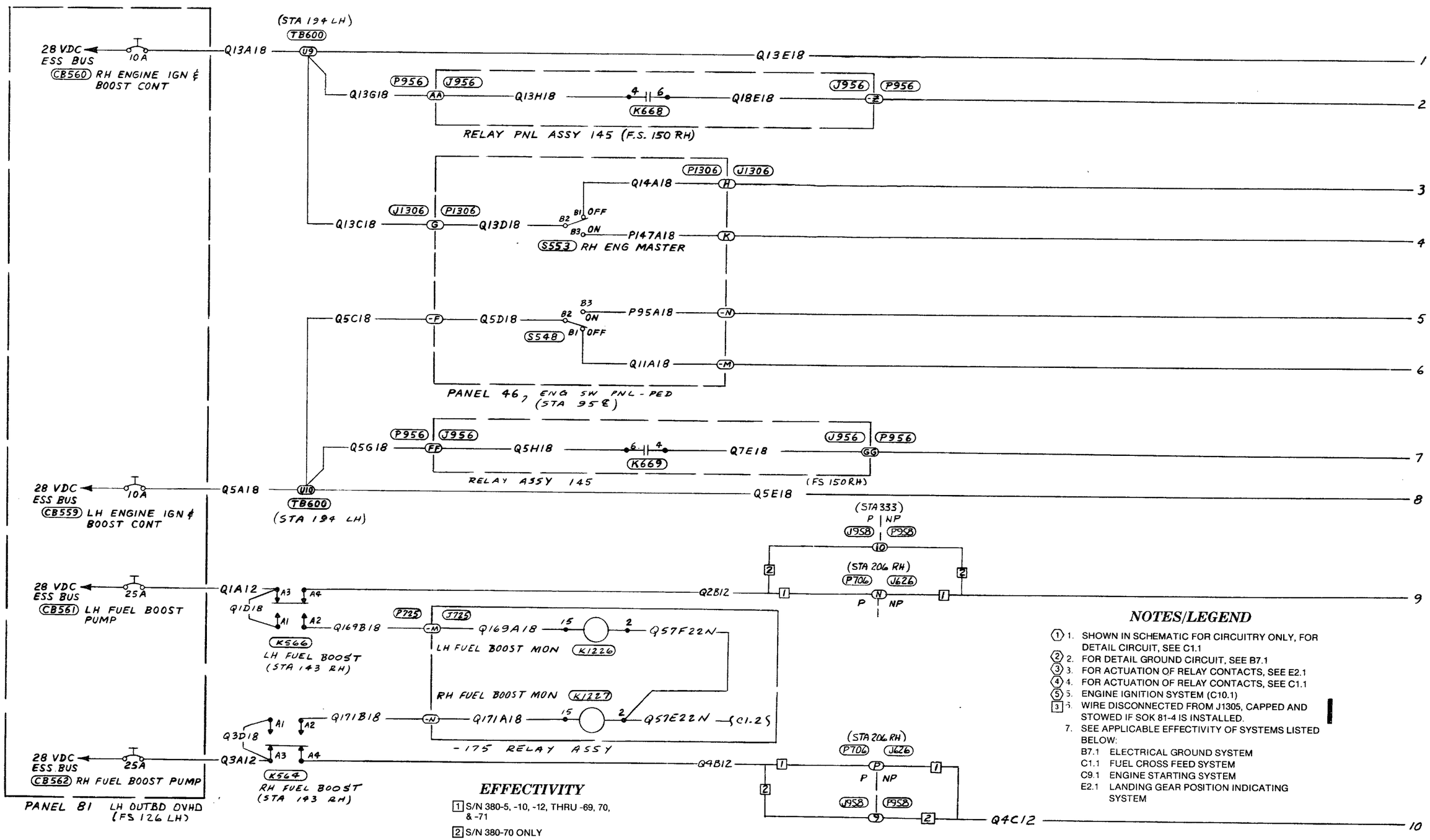

EFFECTIVITY

1 S/N 380-5, -10, -12, THRU -69, 70, & -71

2 S/N 380-70 ONLY

NOTES/LEGEND

1. SHOWN IN SCHEMATIC FOR CIRCUITRY ONLY, FOR DETAIL CIRCUIT, SEE C1.1
2. FOR DETAIL GROUND CIRCUIT, SEE B7.1
3. FOR ACTUATION OF RELAY CONTACTS, SEE E2.1
4. FOR ACTUATION OF RELAY CONTACTS, SEE C1.1
5. ENGINE IGNITION SYSTEM (C10.1)
6. WIRE DISCONNECTED FROM J1305, CAPPED AND STOWED IF SOK 81-4 IS INSTALLED.
7. SEE APPLICABLE EFFECTIVITY OF SYSTEMS LISTED BELOW:
   - B7.1 ELECTRICAL GROUND SYSTEM
   - C1.1 FUEL CROSS FEED SYSTEM
   - C9.1 ENGINE STARTING SYSTEM
   - E2.1 LANDING GEAR POSITION INDICATING SYSTEM

FUEL BOOST SYSTEM
S/N 380-5, -10, -12 & Subs
(Sheet 1 of 2)

© COPYRIGHT, 1987 BY SABRELINER CORPORATION

C2.2	8	7	6	5

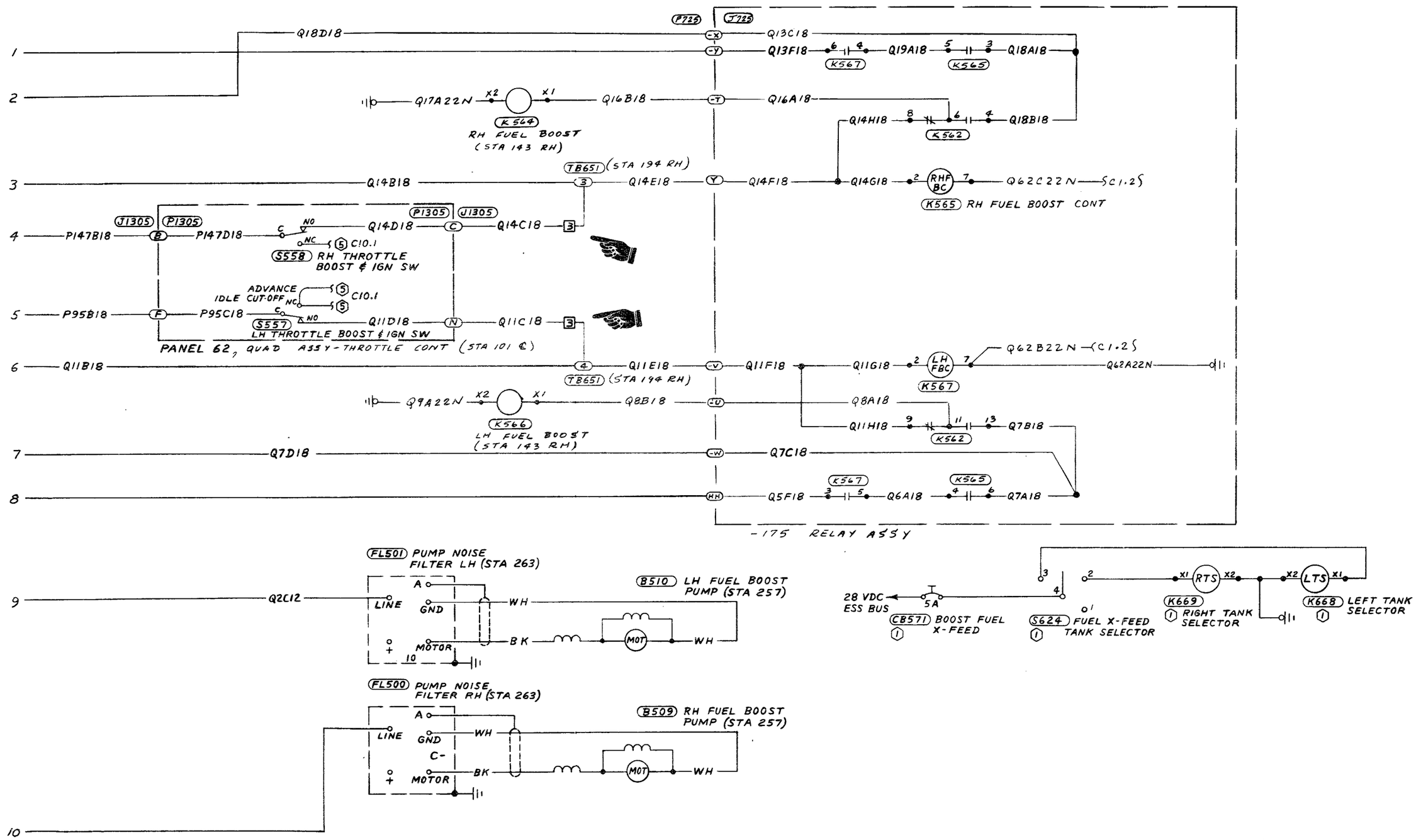

© COPYRIGHT, 1987 BY SABRELINER CORPORATION

FUEL BOOST SYSTEM
S/N 380-5, -10, -12 & Subs
(Sheet 2 of 2)

4	3	2	1	C2.2

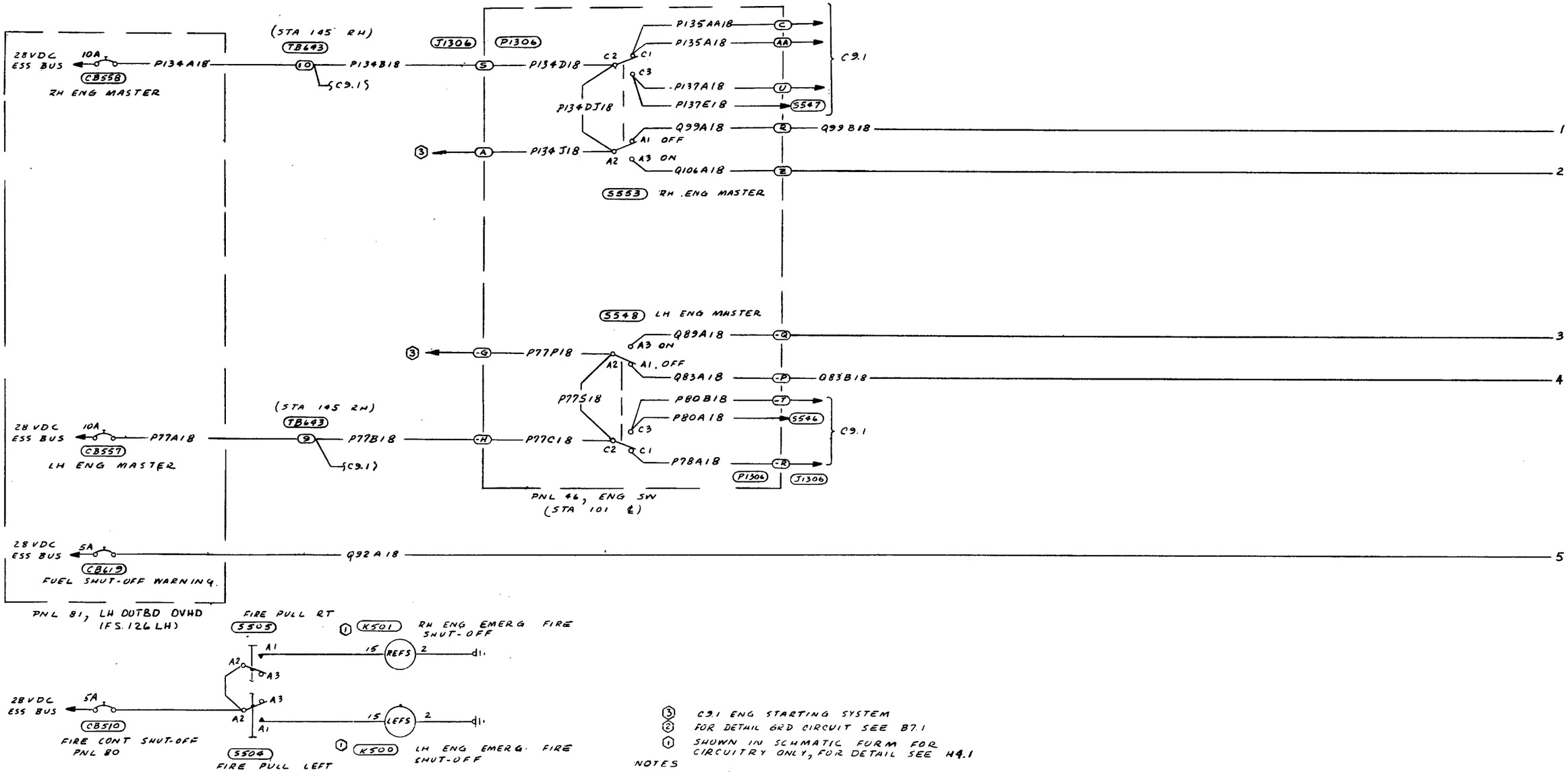

NOTES

3. C9.1 ENG STARTING SYSTEM
2. FOR DETAIL GRD CIRCUIT SEE B7.1
1. SHOWN IN SCHMATIC FORM FOR CIRCUITRY ONLY, FOR DETAIL SEE H4.1

FUEL SHUT-OFF SYSTEM
(380-1 Thru -4, -6 Thru -9, & -11)
(Sheet 1 of 2)

© COPYRIGHT, 1981 BY ROCKWELL INTERNATIONAL

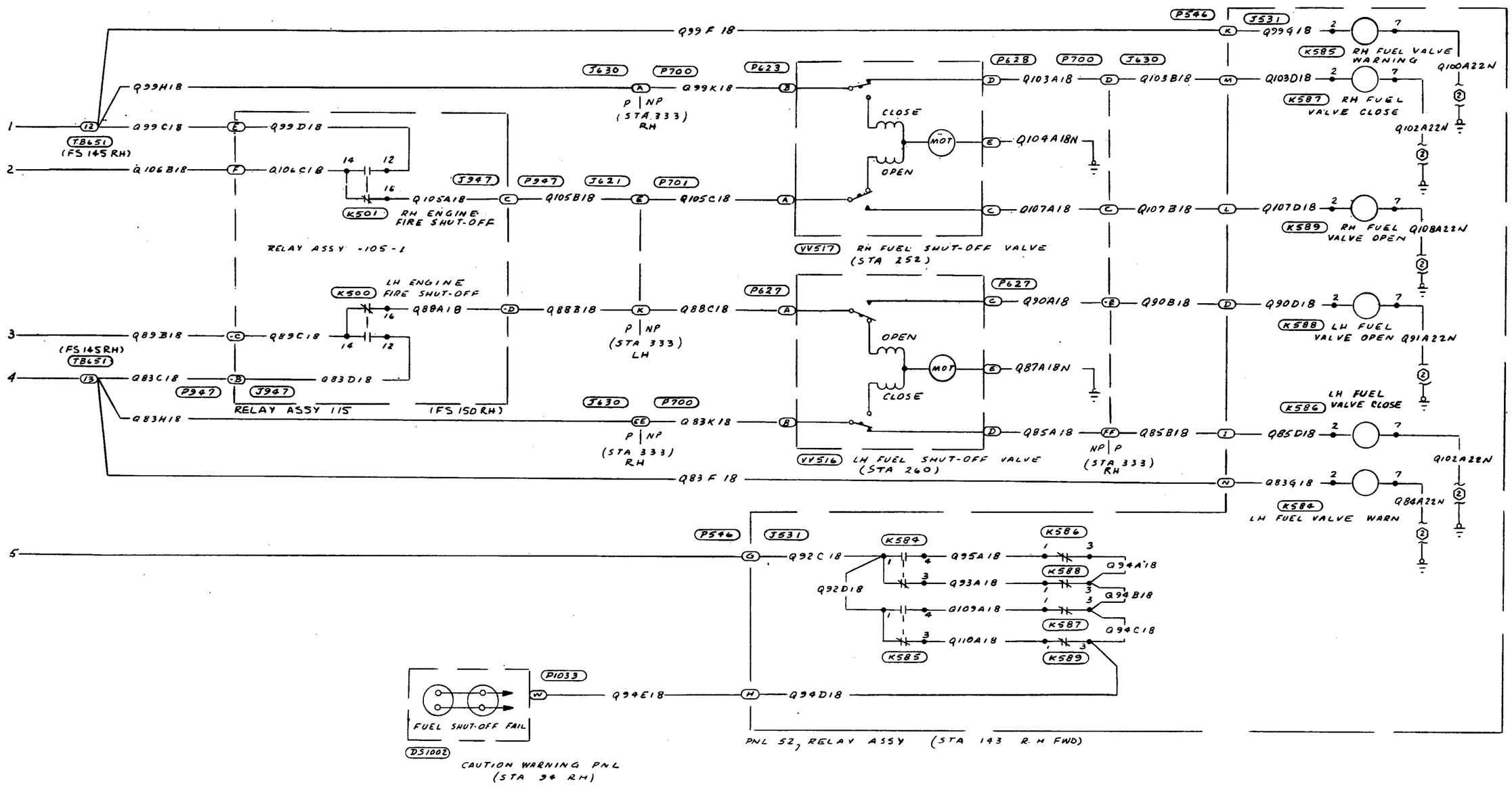

FUEL SHUT-OFF SYSTEM
(380-1 Thru -4, -6 Thru -9, & -11)
(Sheet 2 of 2)

© COPYRIGHT, 1981 BY ROCKWELL INTERNATIONAL

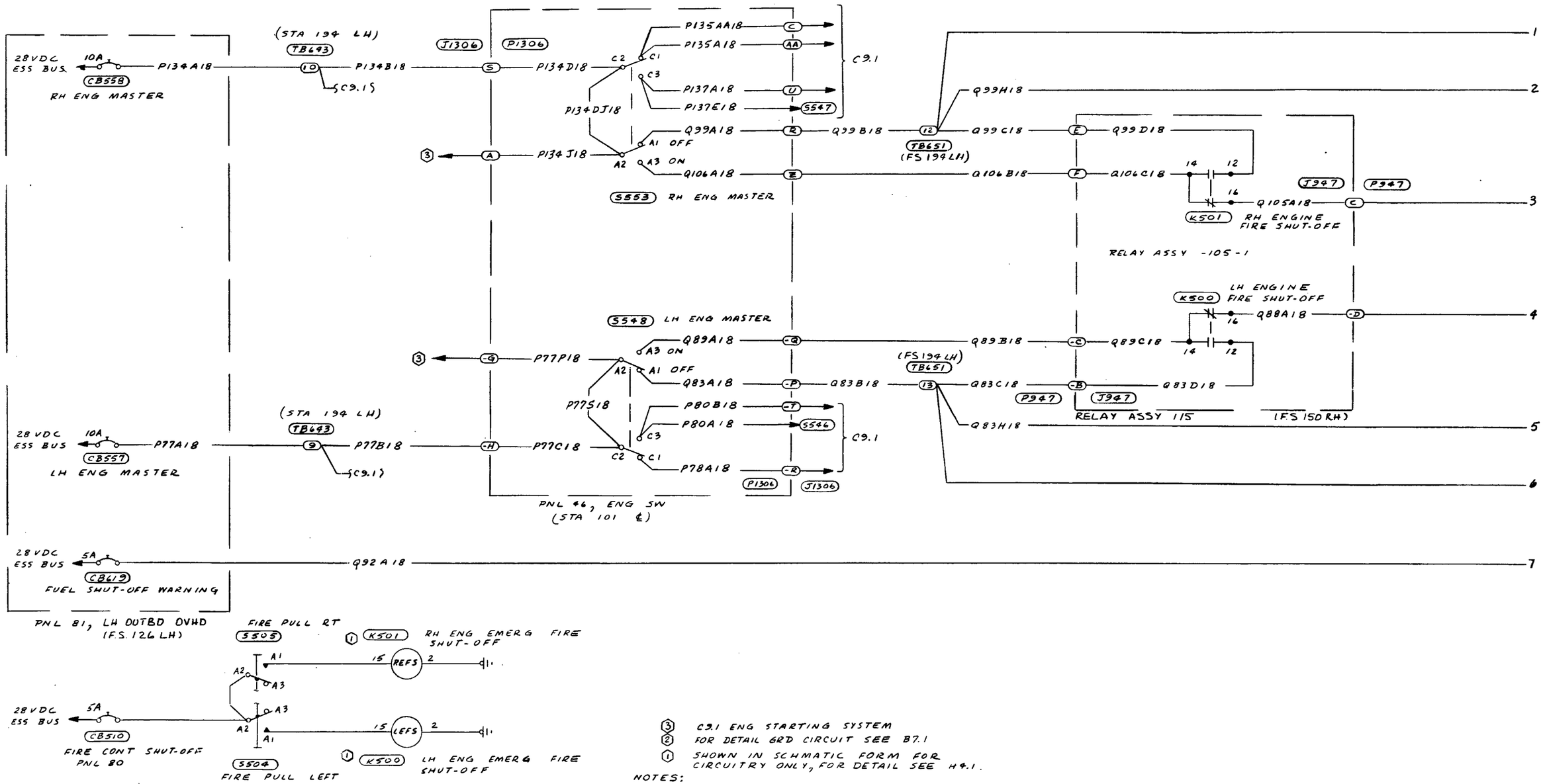

NOTES:

(3) C9.1 ENG STARTING SYSTEM
(2) FOR DETAIL GRD CIRCUIT SEE B7.1
(1) SHOWN IN SCHMATIC FORM FOR CIRCUITRY ONLY, FOR DETAIL SEE H4.1.

FUEL SHUT-OFF SYSTEM
(380-5, -10, -12, & Subs)
(Sheet 1 of 2)

© COPYRIGHT, 1981 BY ROCKWELL INTERNATIONAL

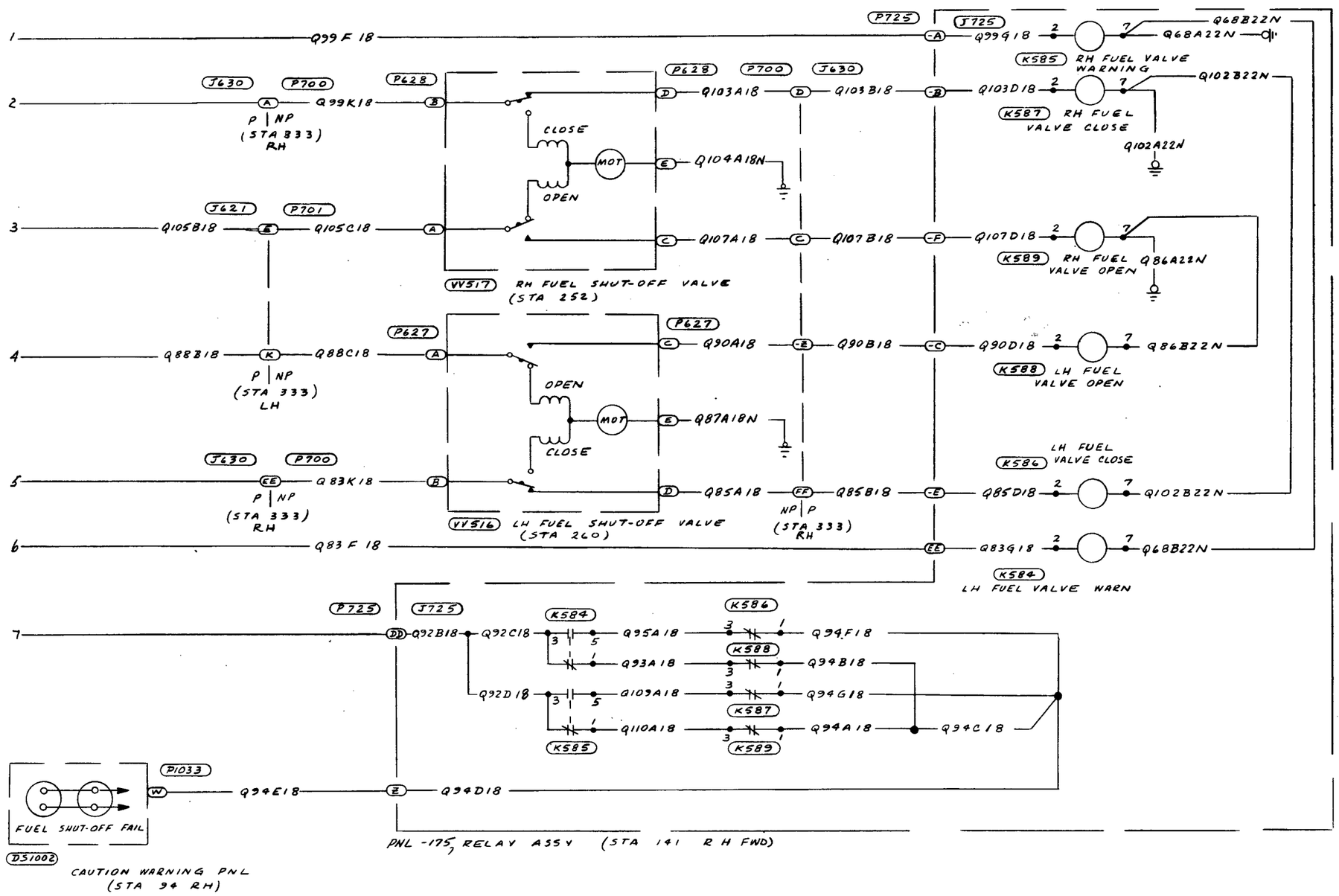

FUEL SHUT-OFF SYSTEM
(380-5, -10, -12, & Subs)
(Sheet 2 of 2)

© COPYRIGHT, 1981 BY ROCKWELL INTERNATIONAL

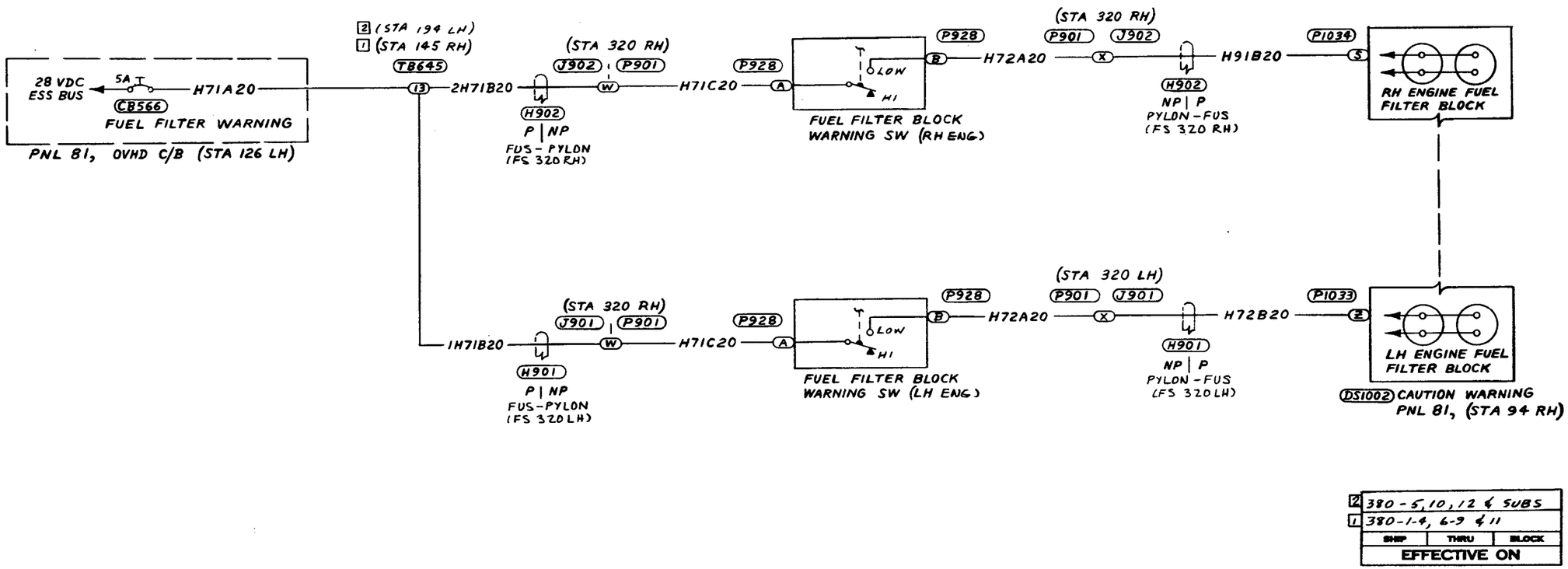

2	380-5, 10, 12 & SUBS
1	380-1-4, 6-9 & 11
SHIP	THRU BLOCK
EFFECTIVE ON	

© COPYRIGHT, 1981 BY ROCKWELL INTERNATIONAL

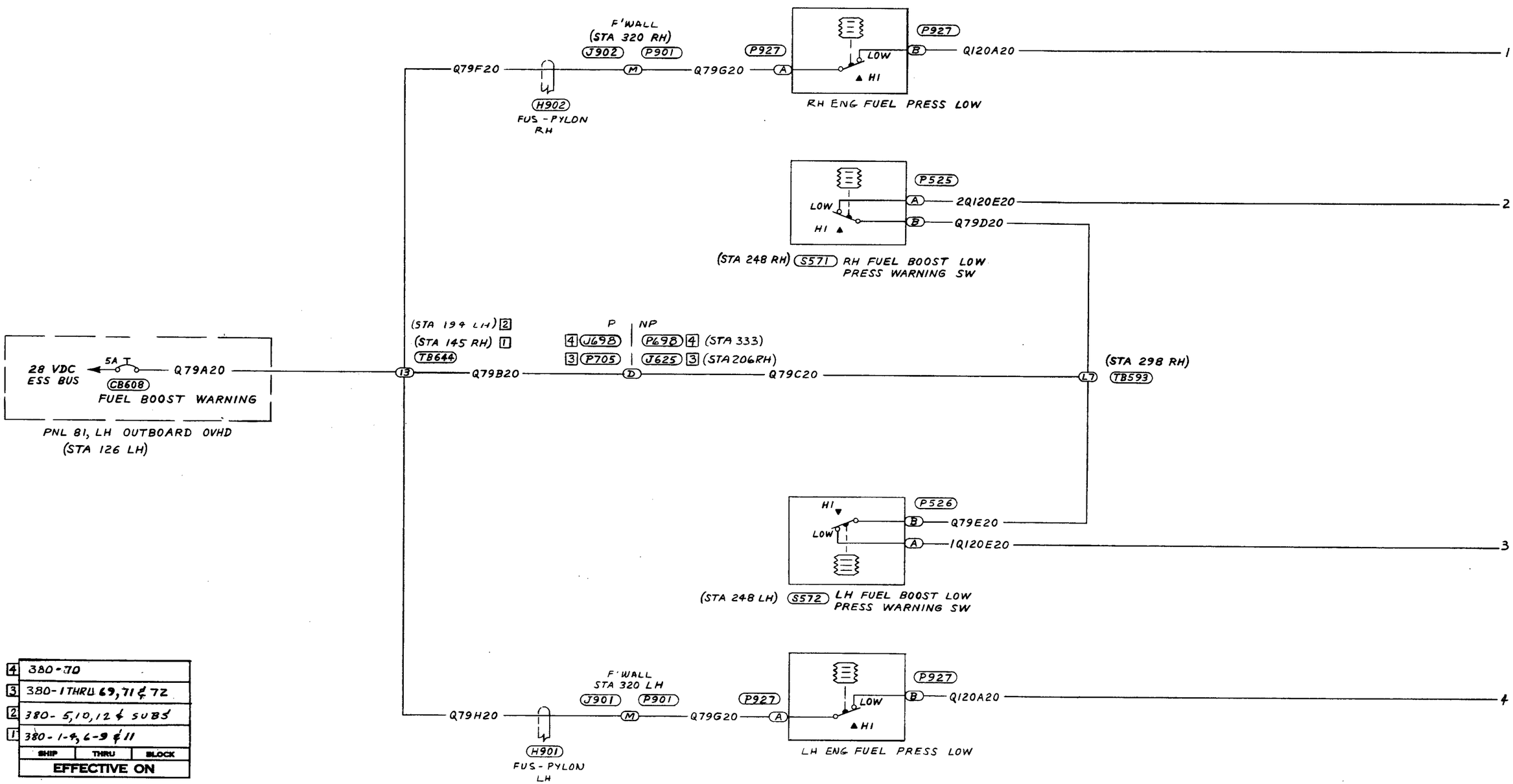

4	380-70		
3	380-1 THRU 69, 71 & 72		
2	380-5, 10, 12 & SUBS		
1	380-1-4, 6-9 & 11		
SHIP	THRU	BLOCK	
EFFECTIVE ON			

FUEL BOOST WARNING SYSTEM
(Sheet 1 of 2)

© COPYRIGHT, 1981 BY ROCKWELL INTERNATIONAL

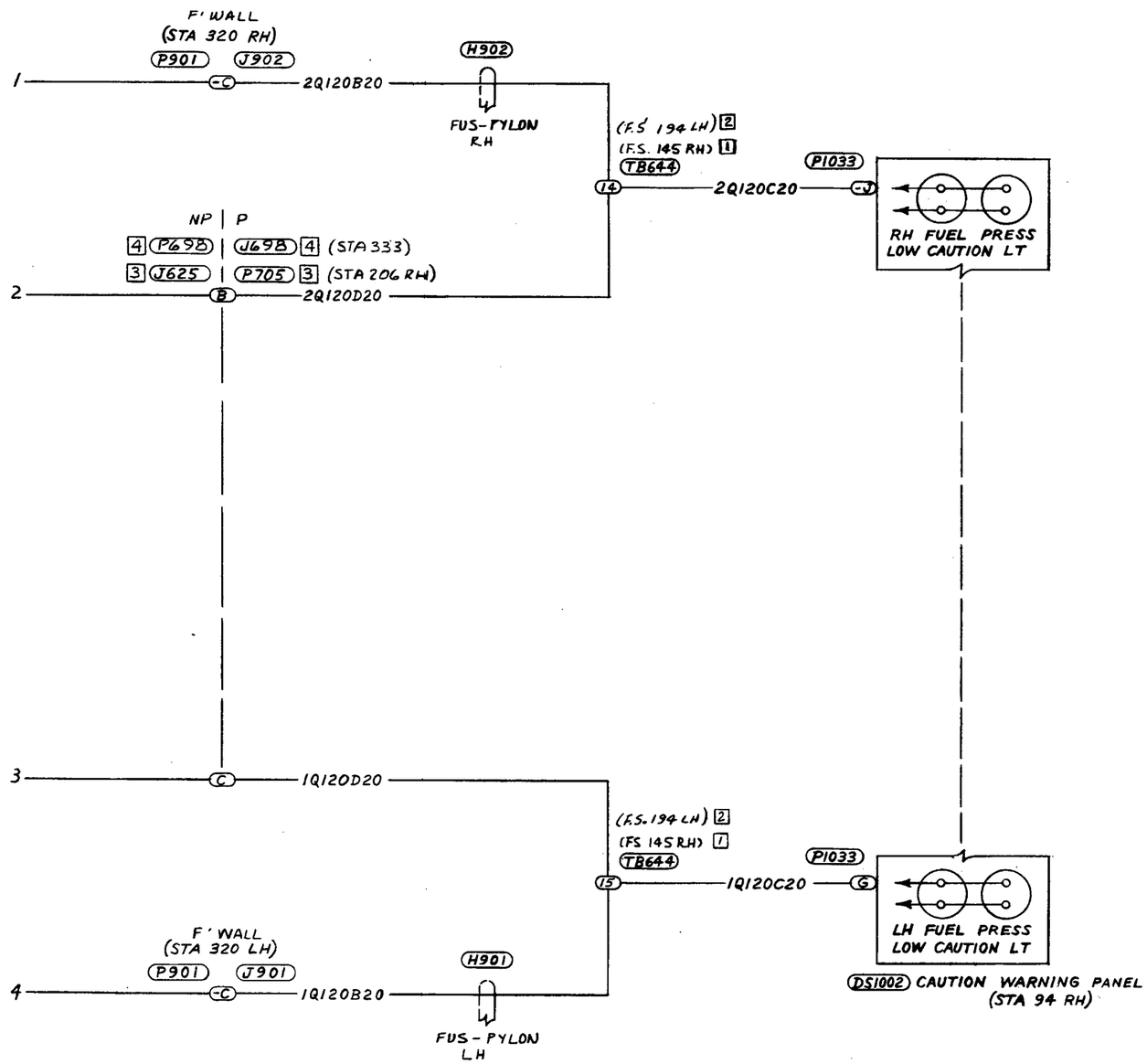

FUEL BOOST WARNING SYSTEM
(Sheet 2 of 2)

© COPYRIGHT, 1981 BY ROCKWELL INTERNATIONAL

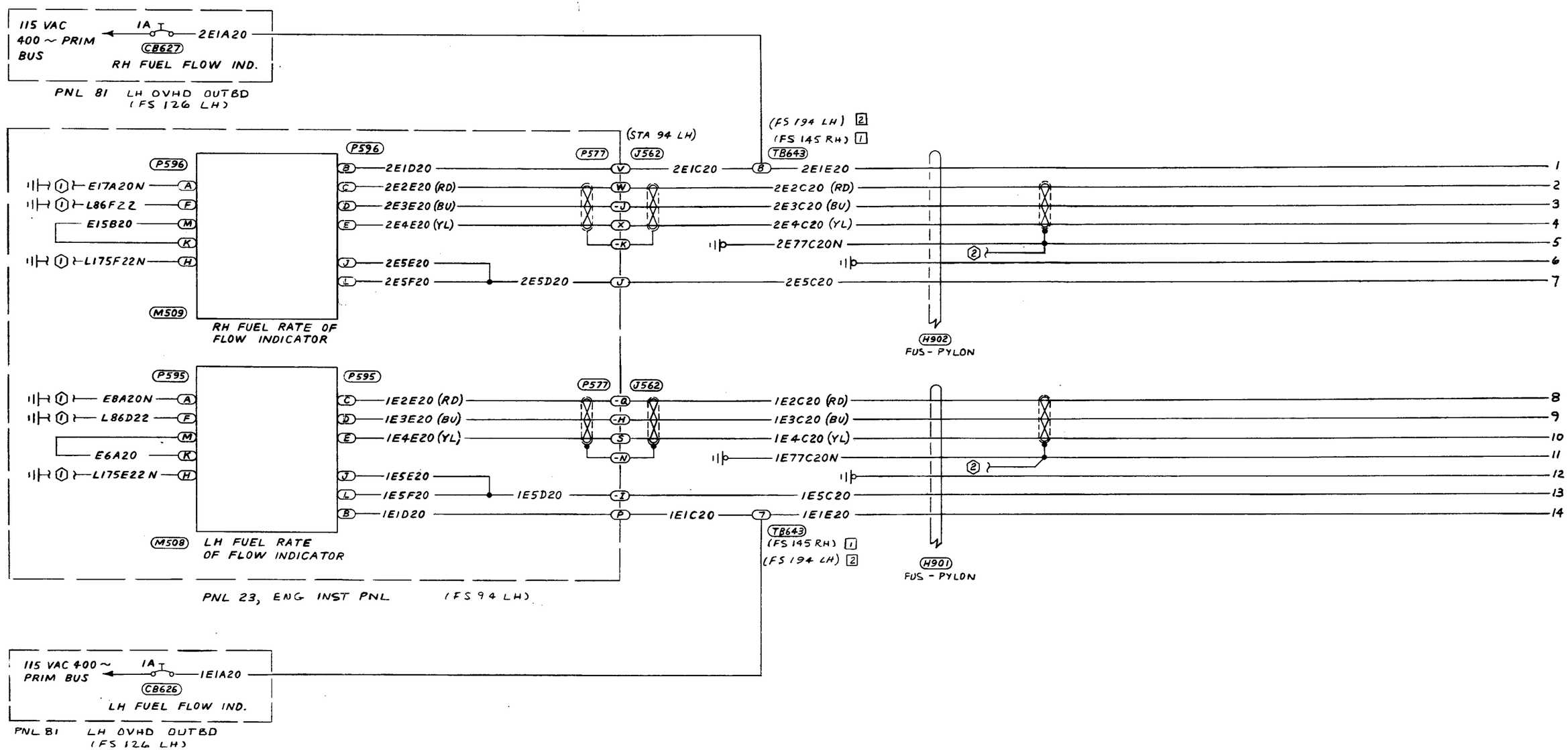

(2) 2. J12.1 RPM SPEED IND.

(1) 1. FOR DETAIL GRD SEE D17.1, ENGINE, RADIO & INST INDIRECT LIGHTS SYSTEM.

NOTES:

FUEL FLOW INDICATING SYSTEM
(380-1 & Subs, 369 Cont Not Included)
(Sheet 1 of 2)

© COPYRIGHT, 1981 BY ROCKWELL INTERNATIONAL

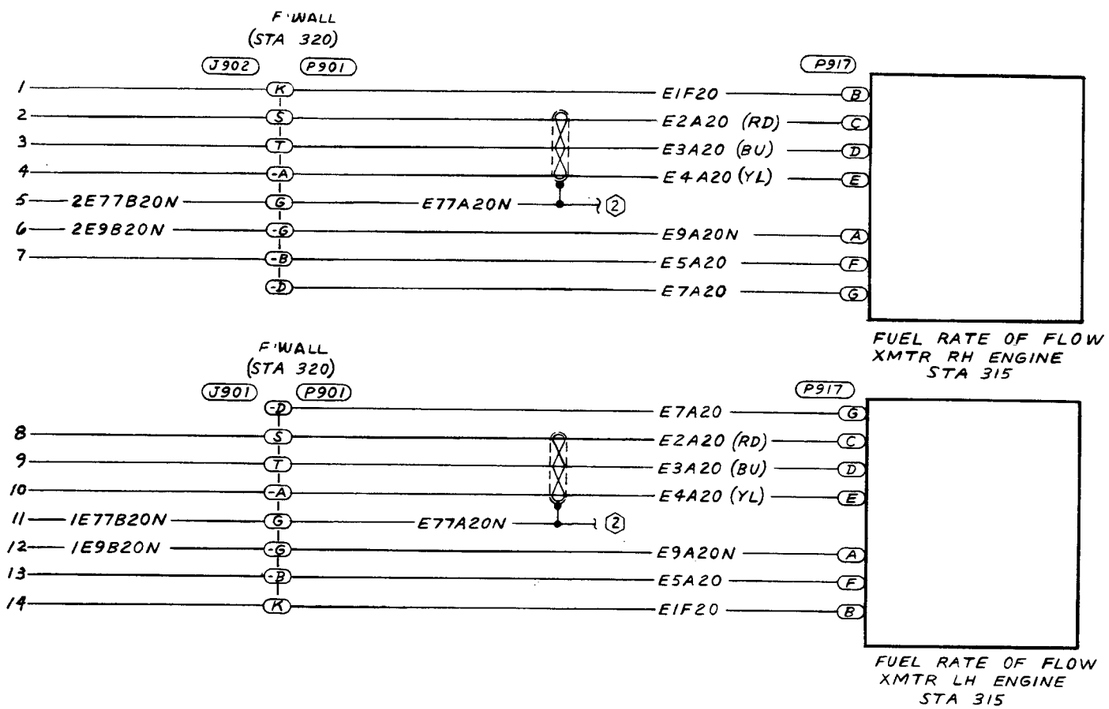

FUEL FLOW INDICATING SYSTEM
(380-1 & Subs, 369 Cont Not INcluded)
(Sheet 2 of 2)

© COPYRIGHT, 1981 BY ROCKWELL INTERNATIONAL

NOTES/LEGEND

(1) FOR DETAIL GRD SYSTEM SEE D16.1 CONSOLE INDIRECT LIGHTING SYSTEM.

EFFECTIVITY

[1] 380-1 -4, -6 THRU -9, & -11

[2] 380-5, -10, -12 & SUBS

PLR	PART NO	DESCRIPTION	CODE
A	1-729-1	SPAR FTG CABLE JACK	1
B	1-730-1	SPAR FTG CABLE JACK	2
F	5435-1	SPAR FTG CABLE JACK	3
A	1-796-1	BLK'HD FEED THRU JACK	4
B	1-797-1	↑	5
F	1-740-1	↕	6
E	1-699-1	↕	7
K	1-957-1	↓	8
J	1-956-1	BLK'HD FEED THRU JACK	9
L	1-939-1	CABLE PLUG	10
J	1-938-1	CABLE PLUG	11
A	1-373-1	CABLE PLUG	12
B	1-620-1	↑	13
F	1-718-1	↕	14
E	1-719-1	↕	15
K	5237-1	↕	16
J	6221-1	↕	17
A	5295-1	↕	18
E	6219-1	↓	19
B	6218-1	CABLE PLUG	20

CODE	PART NUMBER	DESCRIPTION
30	265-510004-1	CABLE ASSY
31	↑ -71	↑
32	↕ -81	↕
33	↓ -111	↓
34	265-510004-121	
41	265-510007-91	
42	↑ 51	
43	↕ 61	
44	↕ 71	
47	↕ 101	
48	↕ 111	
51	↕ 141	
52	↕ 151	
77	↕ 181	
78	↕ 191	
79	↕ 201	
80	↕ 211	
81	↕ 221	
82	↕ 231	
110	↕ 241	
111	↕ 251	
112	↓ 261	
113	265-510007-271	
53	265-510008-241	
54	↑ -251	
55	↕ -261	
56	↓ -271	
73	↑ -281	
74	↕ -291	
75	↓ -301	↓
76	265-510008-311	CABLE ASSY
85	265-511008-281	CABLE ASSY
	↑	↑
87	↕ -291	↕
89	↕ -301	↕
91	↕ -311	↕
93	↕ -321	↕
94	↕ -331	↕
95	↓ -341	↓
96	265-511008-351	CABLE ASSY

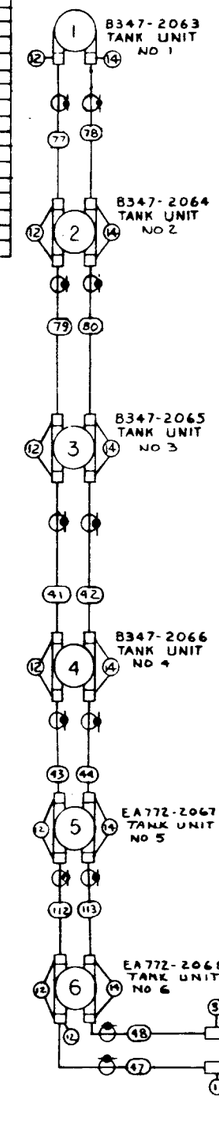

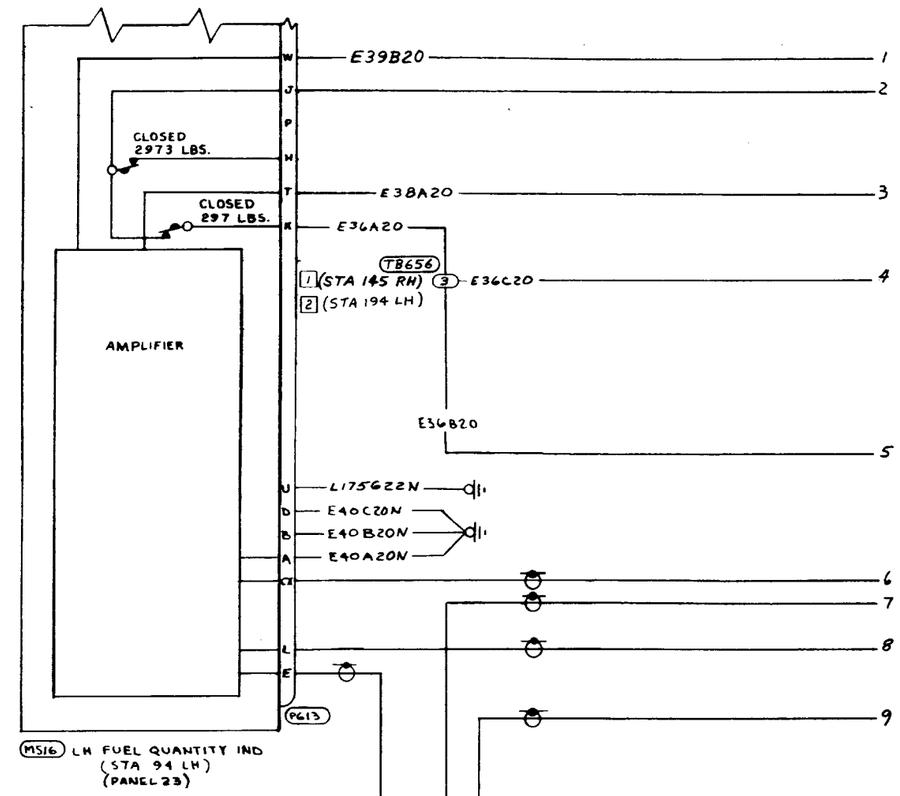

FUEL QUANTITY INDICATING SYSTEM
(Sheet 1 of 2)

© COPYRIGHT, 1984 BY SABRELINER CORPORATION

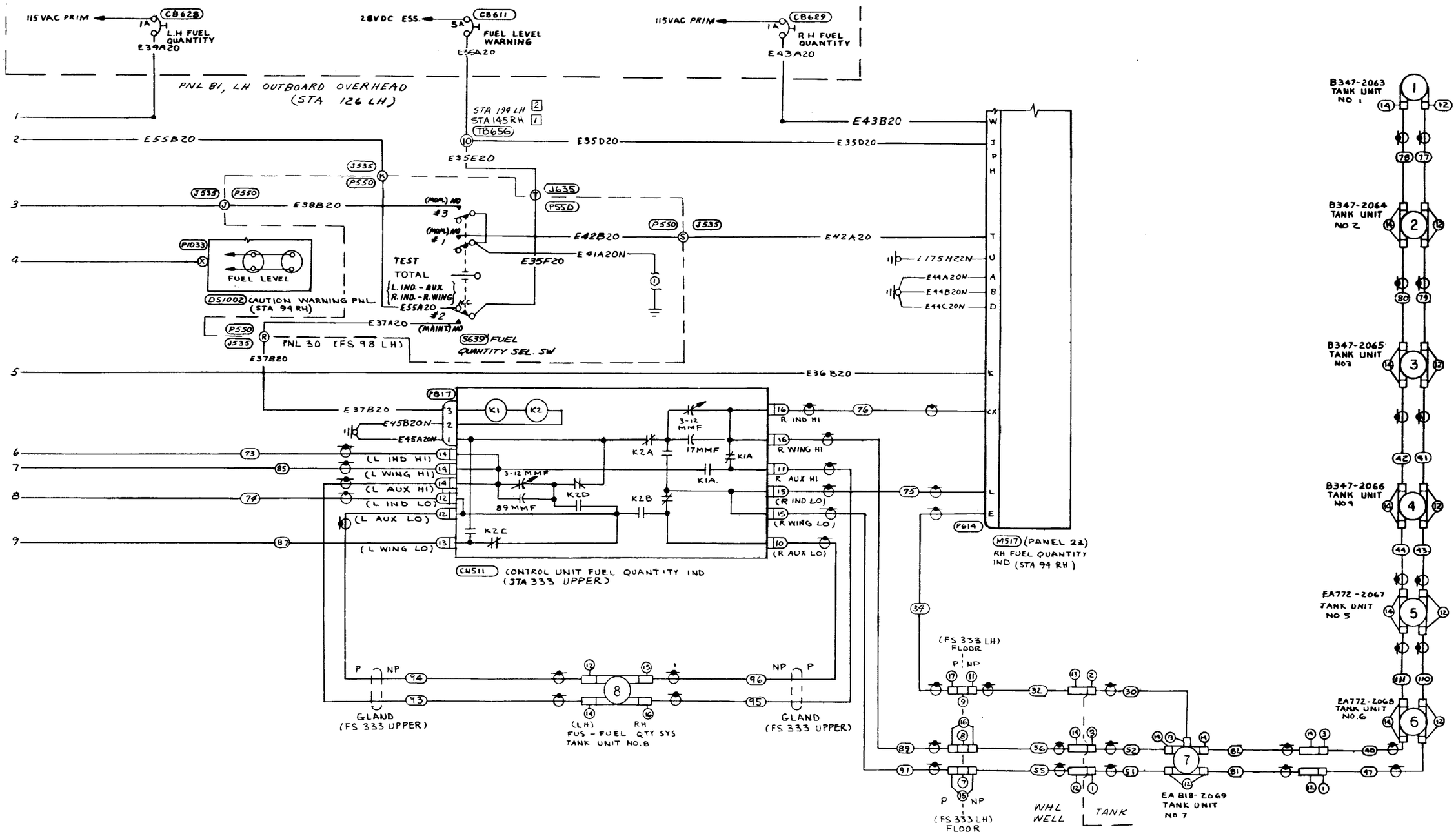

FUEL QUANTITY INDICATING SYSTEM
(Sheet 2 of 2)

© COPYRIGHT. 1984 BY SABRELINER CORPORATION

4	3	2	1	J6.1

CHAPTER 29

HYDRAULIC POWER

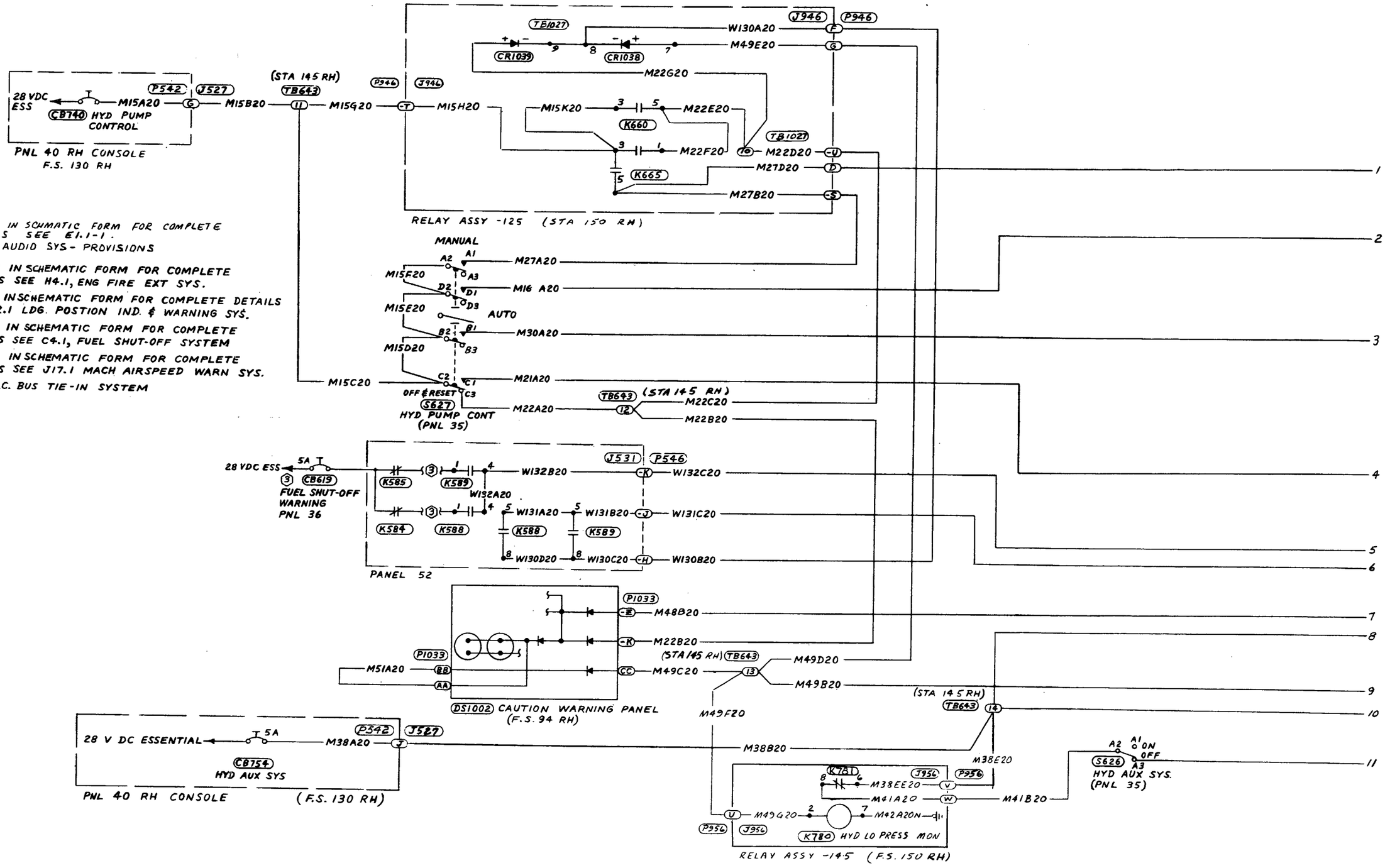

7. SHOWN IN SCHMATIC FORM FOR COMPLETE DETAILS SEE E1.1-1.
6. R1.1-1 AUDIO SYS - PROVISIONS
5. SHOWN IN SCHEMATIC FORM FOR COMPLETE DETAILS SEE H4.1, ENG FIRE EXT SYS.
4. SHOWN IN SCHEMATIC FORM FOR COMPLETE DETAILS SEE E2.1 LDG. POSTION IND. & WARNING SYS.
3. SHOWN IN SCHEMATIC FORM FOR COMPLETE DETAILS SEE C4.1, FUEL SHUT-OFF SYSTEM
2. SHOWN IN SCHEMATIC FORM FOR COMPLETE DETAILS SEE J17.1 MACH AIRSPEED WARN SYS.
1. M2.1 D.C. BUS TIE-IN SYSTEM

NOTES:

HYDRAULIC PUMP SYSTEM (380-1 Thru -4, -6 Thru -9, & -11
Not Changed by Optional Kit No. 25)
(Sheet 1 of 3)

© COPYRIGHT, 1981 BY ROCKWELL INTERNATIONAL

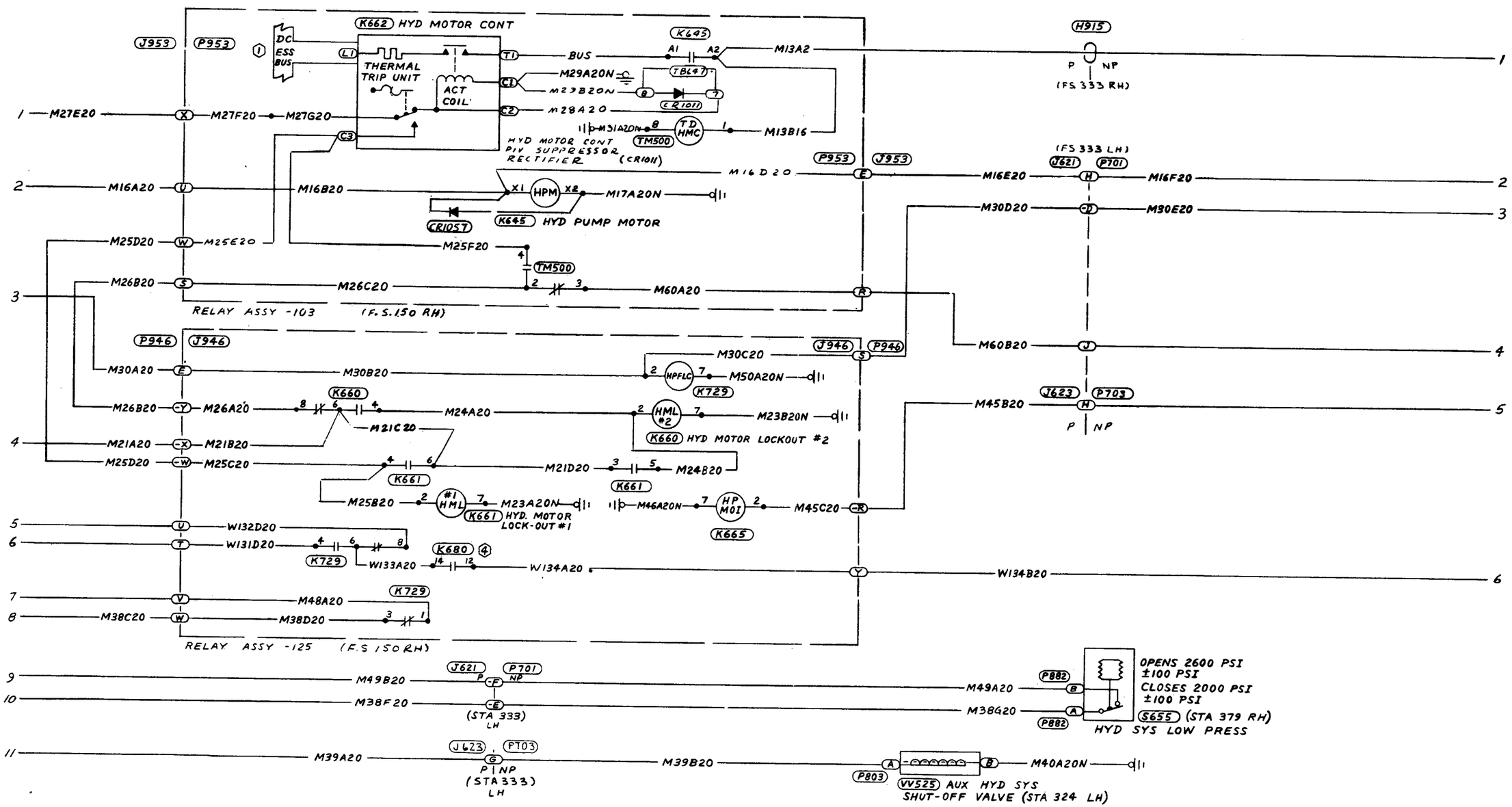

S

HYDRAULIC PUMP SYSTEM (380-1 Thru -4, -6 Thru -9, & -11
Not Changed by Optional Kit No. 25)
(Sheet 2 of 3)

© COPYRIGHT, 1981 BY ROCKWELL INTERNATIONAL

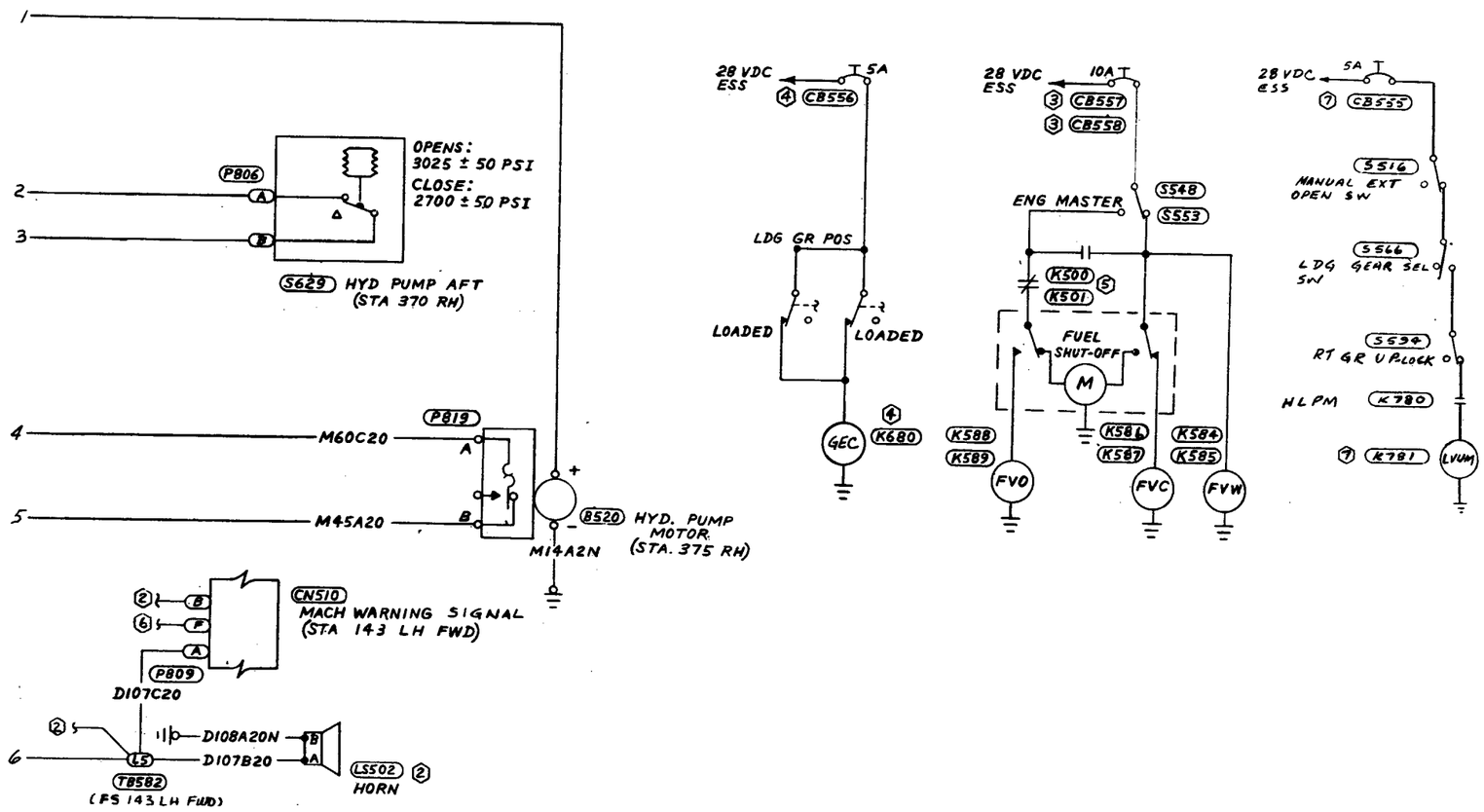

HYDRAULIC PUMP SYSTEM (380-1 Thru -4, -6 Thru -9, & -11
Not Changed by Optional Kit No. 25)
(Sheet 3 of 3)

© COPYRIGHT, 1981 BY ROCKWELL INTERNATIONAL

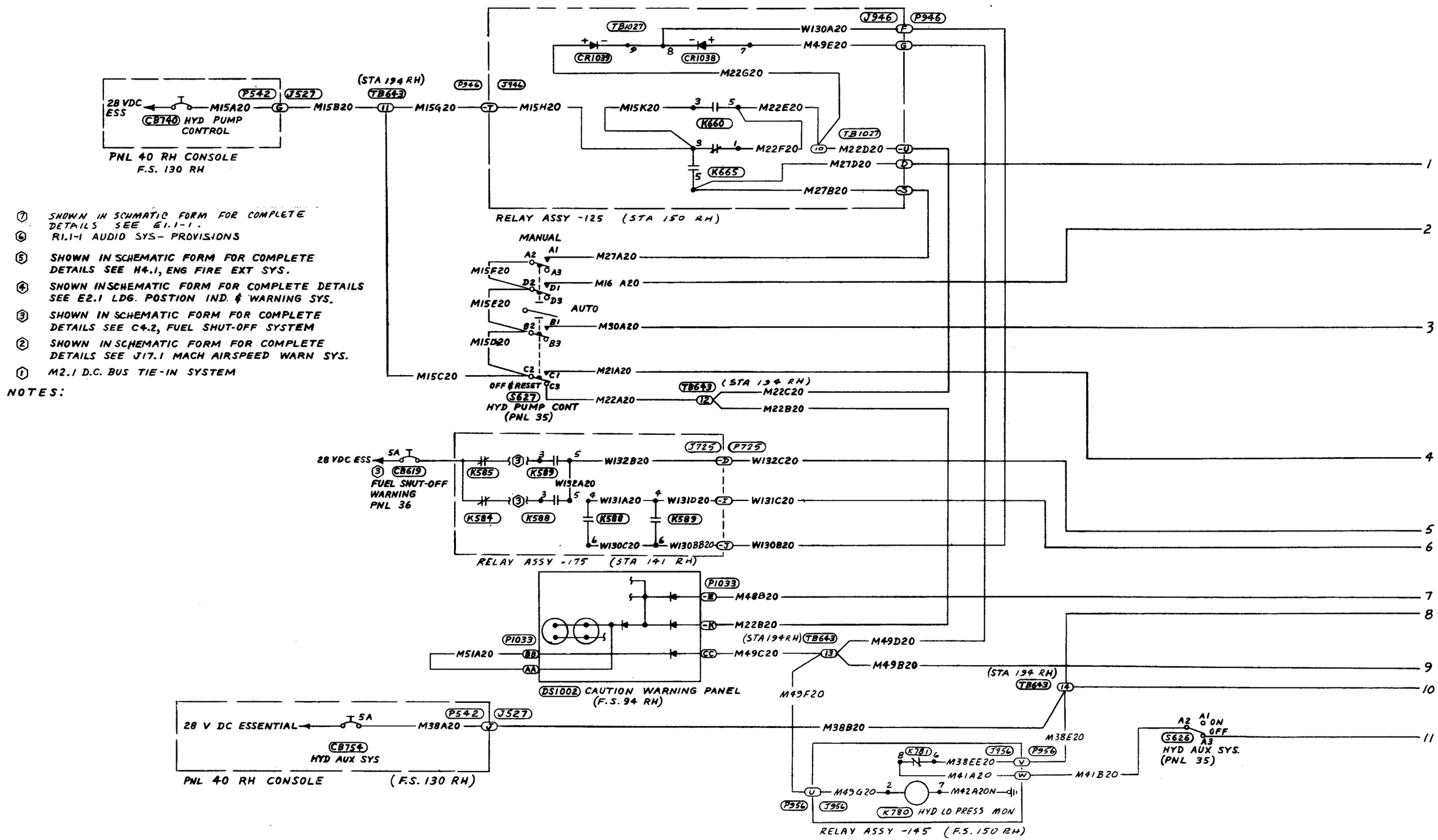

7. SHOWN IN SCHMATIC FORM FOR COMPLETE DETAILS SEE E1.1-1.
6. R1.1-1 AUDIO SYS- PROVISIONS
5. SHOWN IN SCHEMATIC FORM FOR COMPLETE DETAILS SEE H4.1, ENG FIRE EXT SYS.
4. SHOWN IN SCHEMATIC FORM FOR COMPLETE DETAILS SEE E2.1 LDG. POSTION IND. & WARNING SYS.
3. SHOWN IN SCHEMATIC FORM FOR COMPLETE DETAILS SEE C4.2, FUEL SHUT-OFF SYSTEM
2. SHOWN IN SCHEMATIC FORM FOR COMPLETE DETAILS SEE J17.1 MACH AIRSPEED WARN SYS.
1. M2.1 D.C. BUS TIE-IN SYSTEM

NOTES:

HYDRAULIC PUMP SYSTEM
(380-5, -10, -12, & Subs Not Changed by Optional Kit No. 25)
(Sheet 1 of 3)

© COPYRIGHT, 1981 BY ROCKWELL INTERNATIONAL

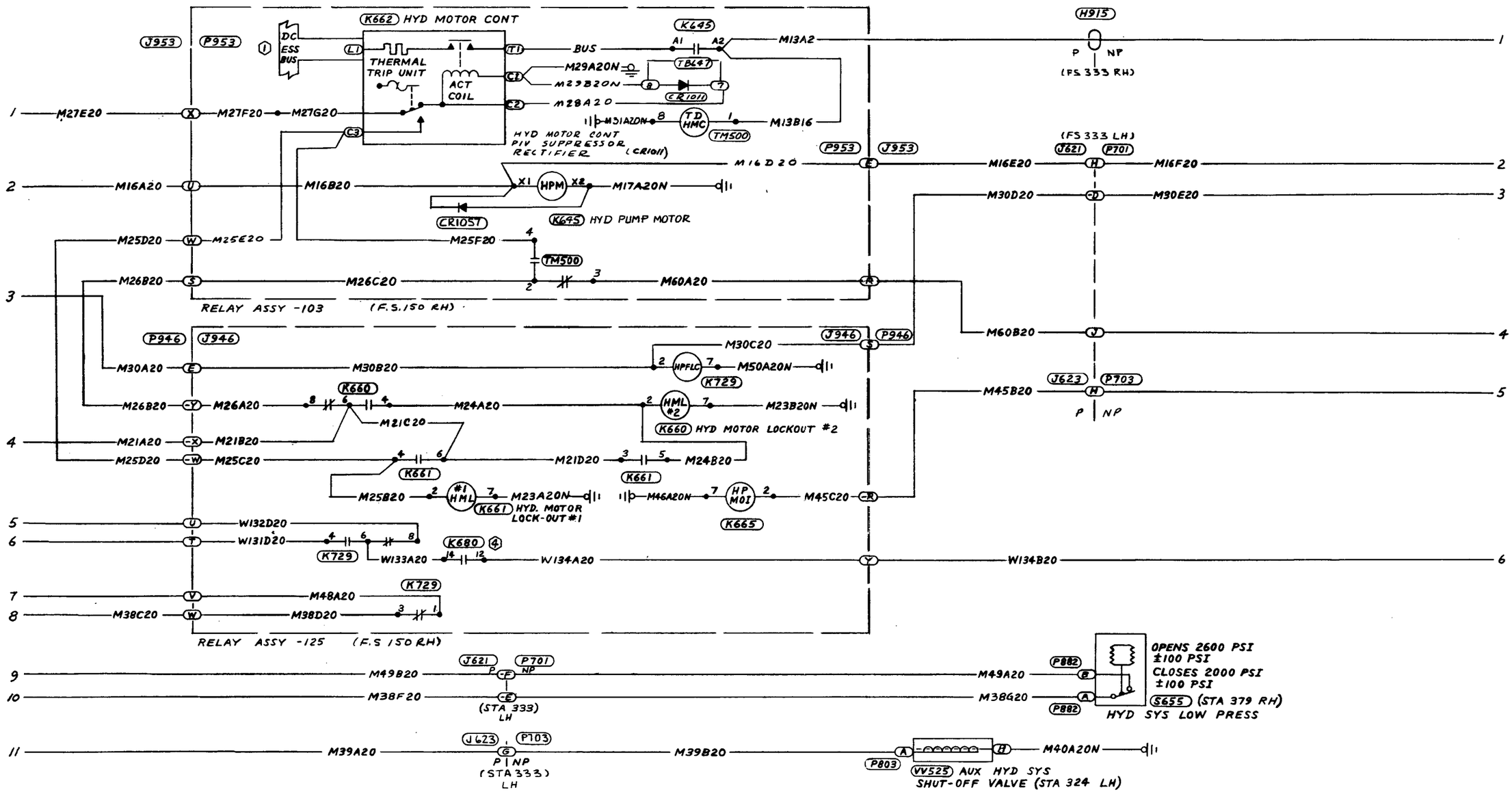

HYDRAULIC PUMP SYSTEM
(380-5, -10, -12, & Subs Not Changed by Optional Kit No. 25)
(Sheet 2 of 3)

© COPYRIGHT, 1981 BY ROCKWELL INTERNATIONAL

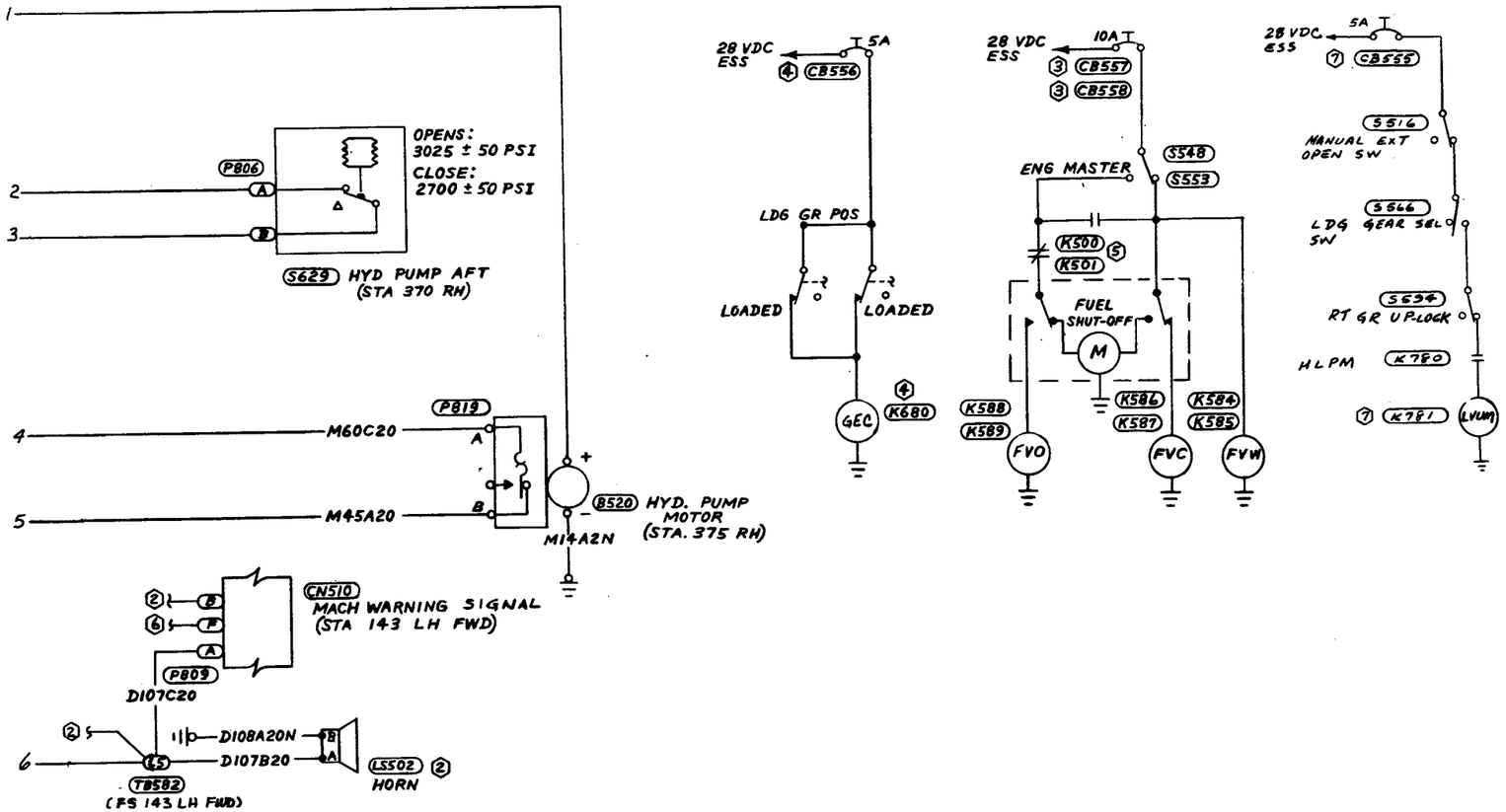

HYDRAULIC PUMP SYSTEM
(380-5, -10, -12, & Subs Not Changed by Optional Kit No. 25)
(Sheet 3 of 3)

© COPYRIGHT 1981 BY ROCKWELL INTERNATIONAL

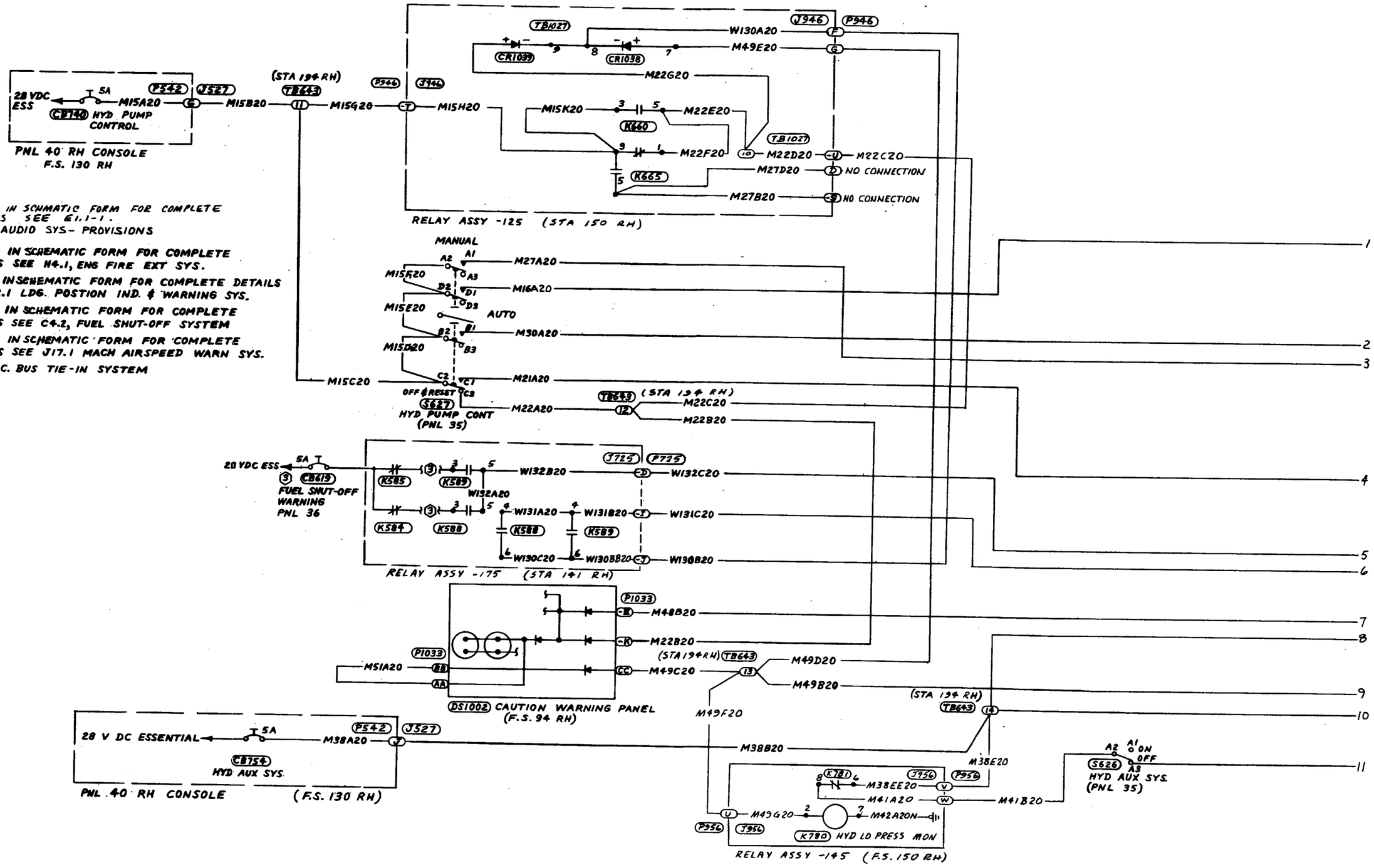

7 SHOWN IN SCHMATIC FORM FOR COMPLETE DETAILS SEE E1.1-1.

6 R1.1-1 AUDIO SYS- PROVISIONS

5 SHOWN IN SCHEMATIC FORM FOR COMPLETE DETAILS SEE H4.1, ENG FIRE EXT SYS.

4 SHOWN IN SCHEMATIC FORM FOR COMPLETE DETAILS SEE E2.1 LDG. POSTION IND. & WARNING SYS.

3 SHOWN IN SCHEMATIC FORM FOR COMPLETE DETAILS SEE C4.2, FUEL SHUT-OFF SYSTEM

2 SHOWN IN SCHEMATIC FORM FOR COMPLETE DETAILS SEE J17.1 MACH AIRSPEED WARN SYS.

1 M2.1 D.C. BUS TIE-IN SYSTEM

NOTES:

HYDRAULIC PUMP SYSTEM
(380-5, -10, -12, & Subs Changed by Optional Kit No. 25)
(Sheet 1 of 3)

© COPYRIGHT, 1981 BY ROCKWELL INTERNATIONAL

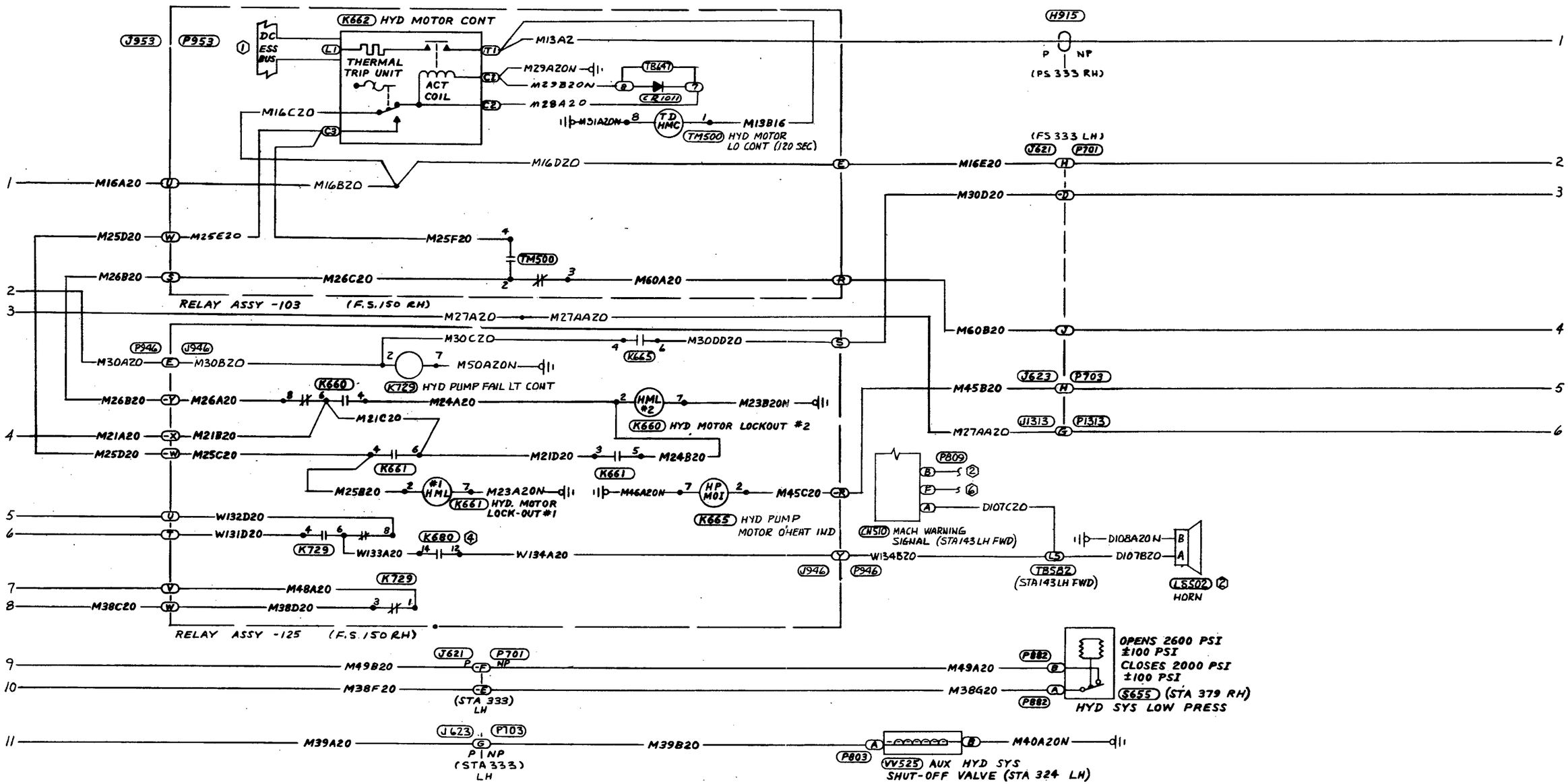

HYDRAULIC PUMP SYSTEM
(380-5, -10, -12, & Subs Changed by Optional Kit No. 25)
(Sheet 2 of 3)

© COPYRIGHT, 1981 BY ROCKWELL INTERNATIONAL

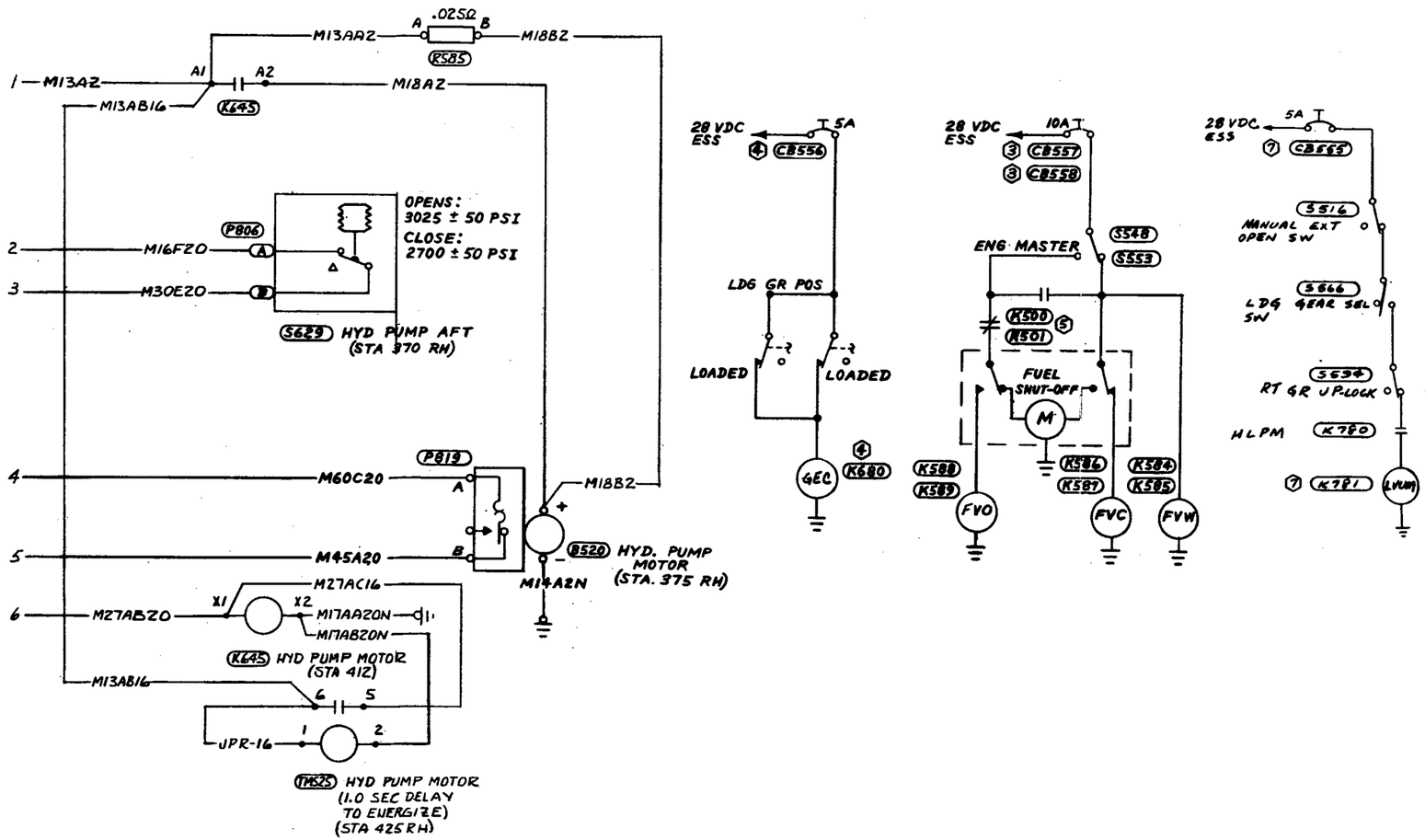

HYDRAULIC PUMP SYSTEM
(380-5, -10, -12, & Subs Changed by Optional Kit No. 25)
(Sheet 3 of 3)

© COPYRIGHT, 1981 BY ROCKWELL INTERNATIONAL

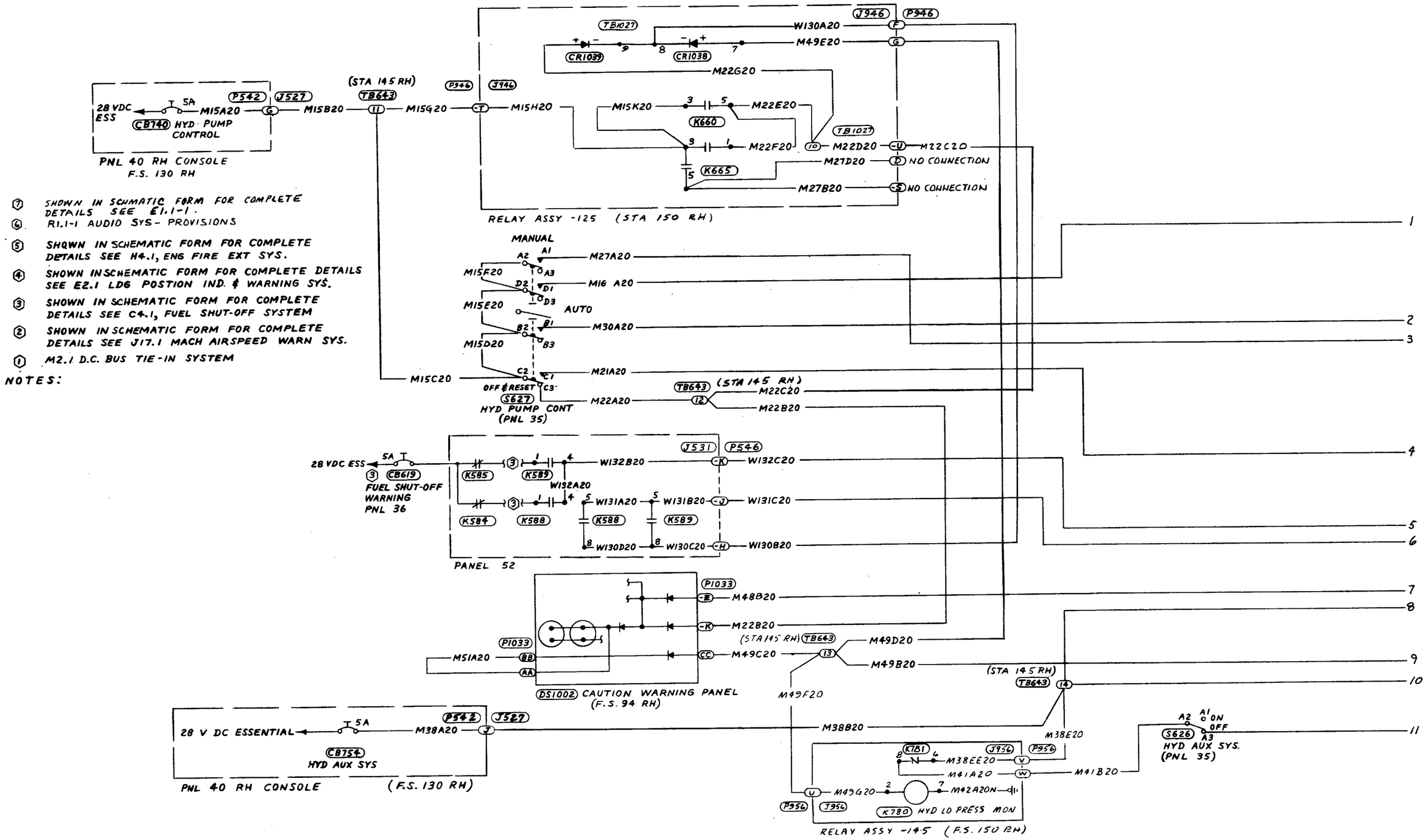

NOTES:

7. SHOWN IN SCHMATIC FORM FOR COMPLETE DETAILS SEE E1.1-1.
6. R1.1-1 AUDIO SYS- PROVISIONS
5. SHOWN IN SCHEMATIC FORM FOR COMPLETE DETAILS SEE H4.1, ENG FIRE EXT SYS.
4. SHOWN IN SCHEMATIC FORM FOR COMPLETE DETAILS SEE E2.1 LDG POSTION IND. & WARNING SYS.
3. SHOWN IN SCHEMATIC FORM FOR COMPLETE DETAILS SEE C4.1, FUEL SHUT-OFF SYSTEM
2. SHOWN IN SCHEMATIC FORM FOR COMPLETE DETAILS SEE J17.1 MACH AIRSPEED WARN SYS.
1. M2.1 D.C. BUS TIE-IN SYSTEM

HYDRAULIC PUMP SYSTEM
(380-1 Thru -4, -6 Thru -9 & -11 Changed by Optional Kit No. 25)
(Sheet 1 of 3)

© COPYRIGHT, 1981 BY ROCKWELL INTERNATIONAL

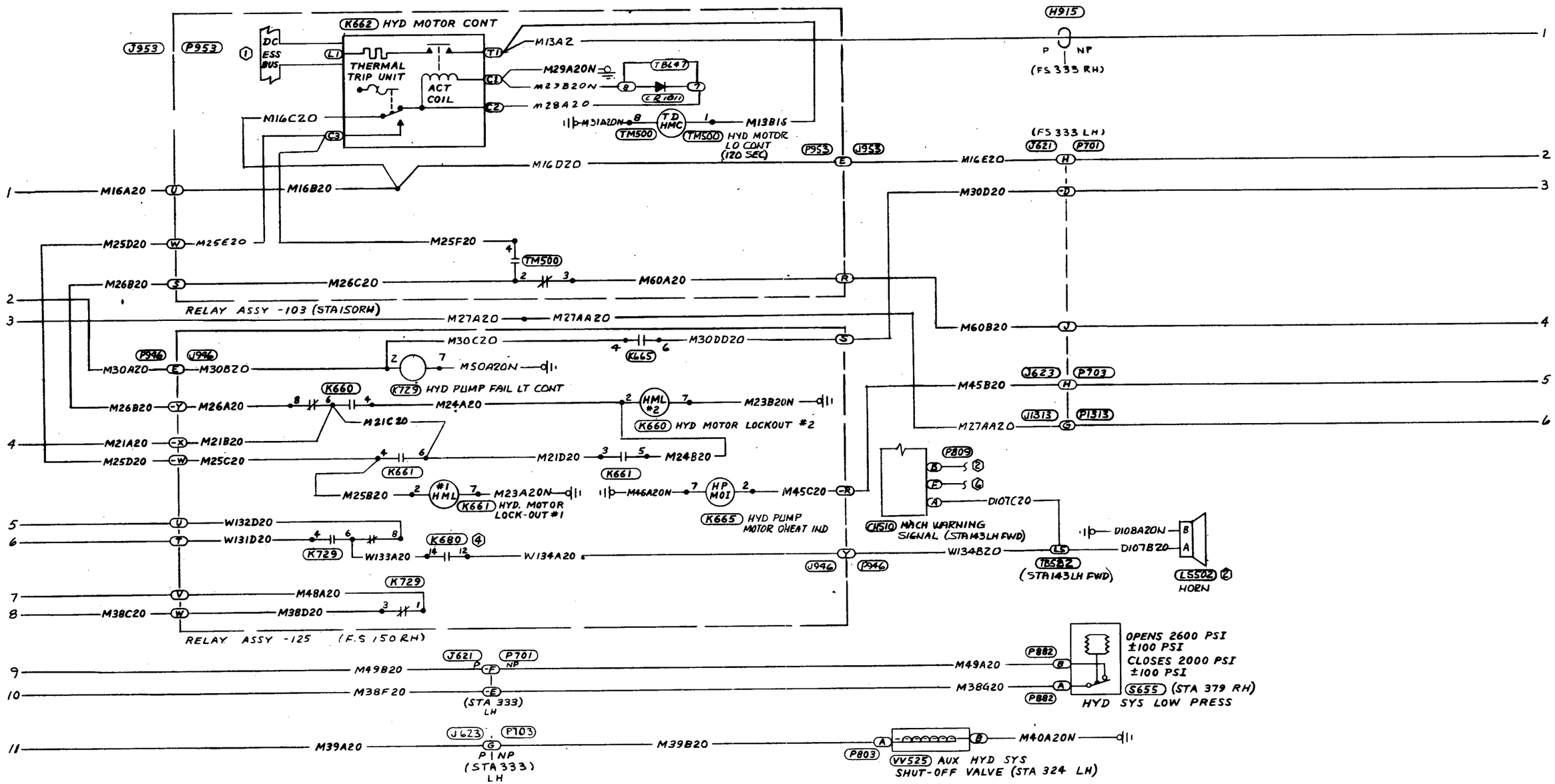

HYDRAULIC PUMP SYSTEM
(380-1 Thru -4, -6 Thru -9 & -11 Changed by Optional Kit No. 25)
(Sheet 2 of 3)

© COPYRIGHT, 1981 BY ROCKWELL INTERNATIONAL

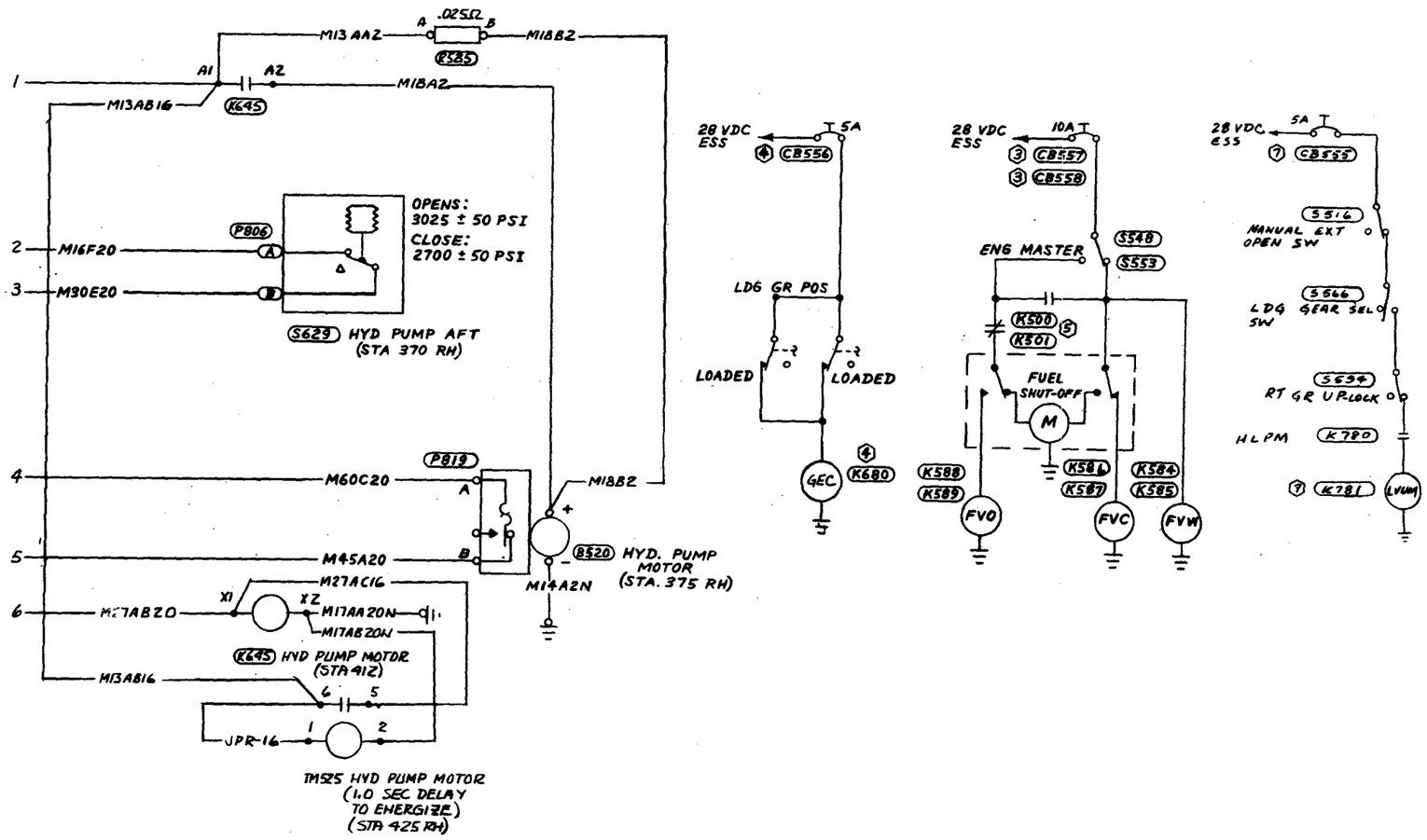

HYDRAULIC PUMP SYSTEM
(380-1 Thru -4, -6 Thru -9 & -11 Changed by Optional Kit No. 25)
(Sheet 3 of 3)

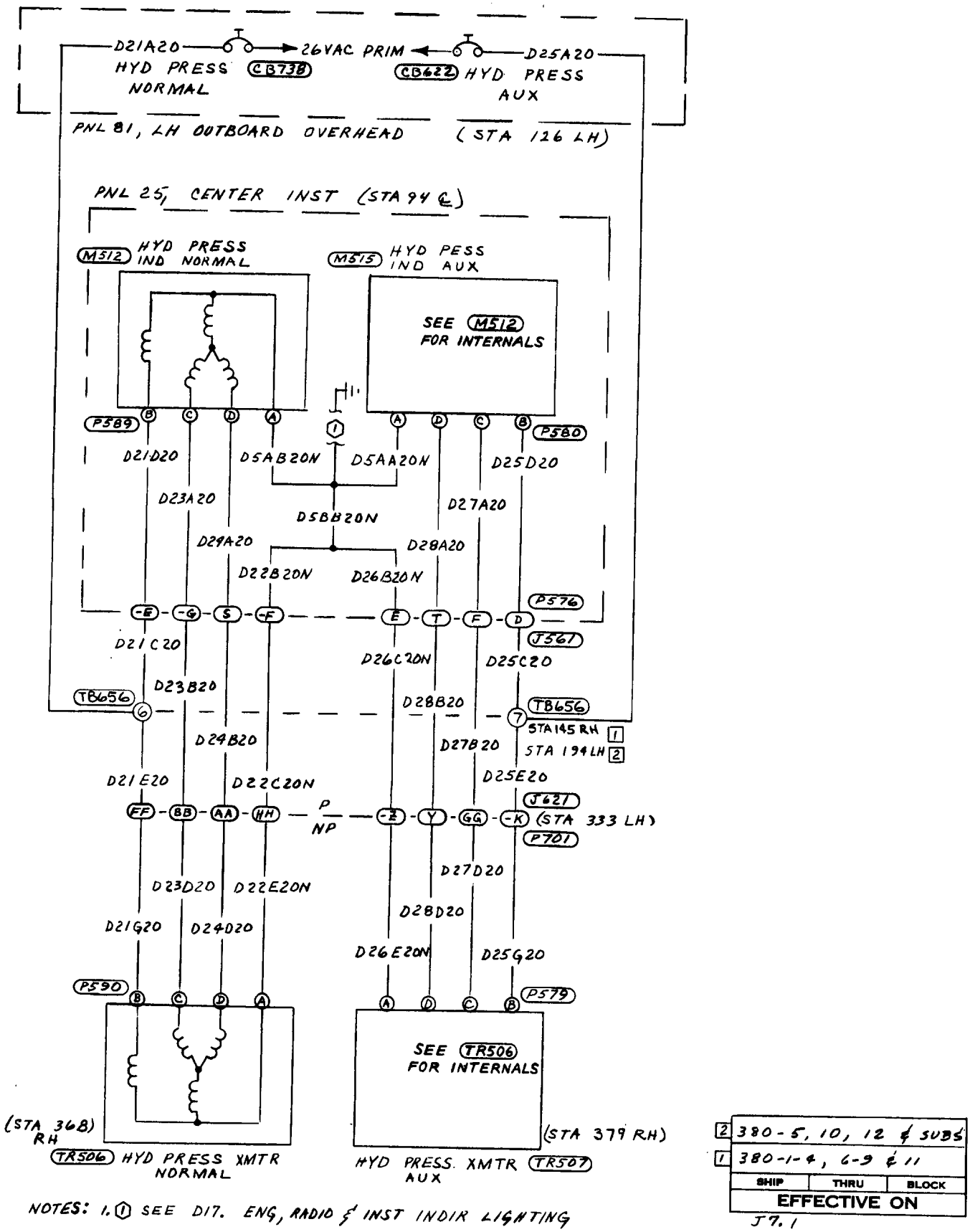

© COPYRIGHT, 1981 BY ROCKWELL INTERNATIONAL

CHAPTER

30

ICE AND RAIN PROTECTION

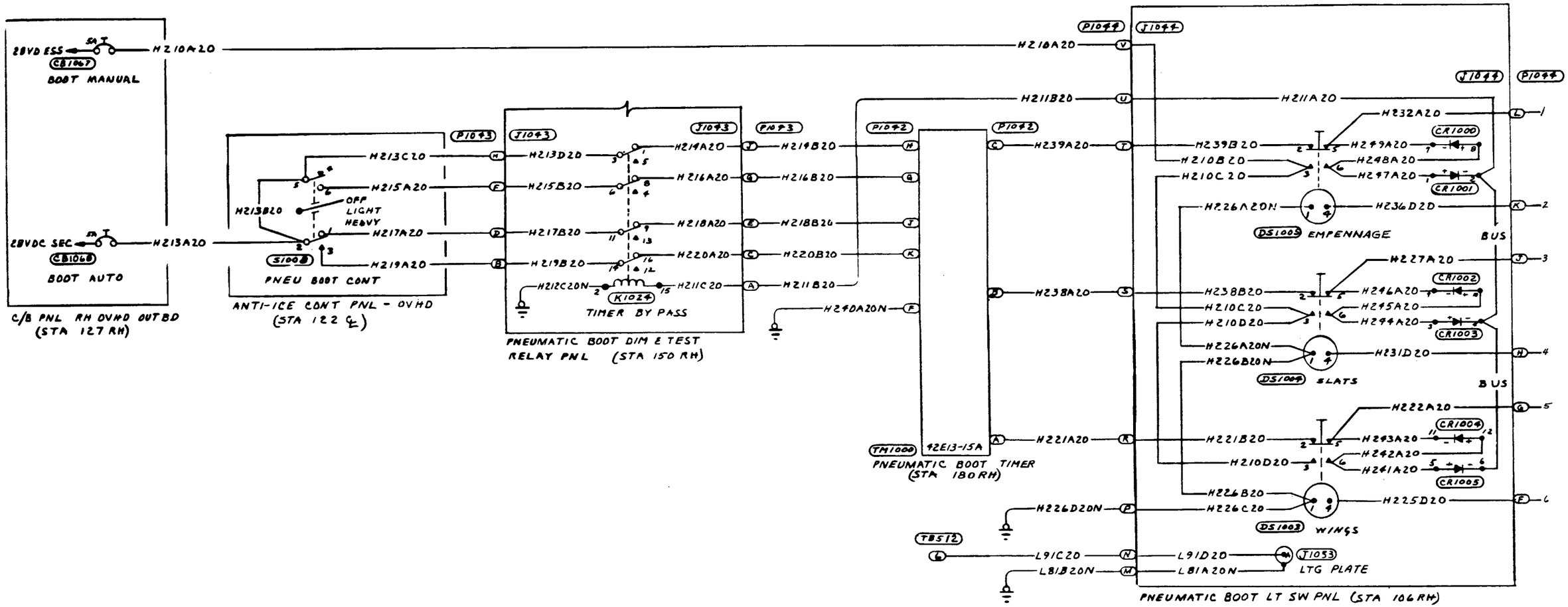

PNEUMATIC BOOT SYSTEM
(Airplanes Changed by S/B 73-20)
(Sheet 1 of 2)

© COPYRIGHT, 1984 BY SABRELINER CORPORATION

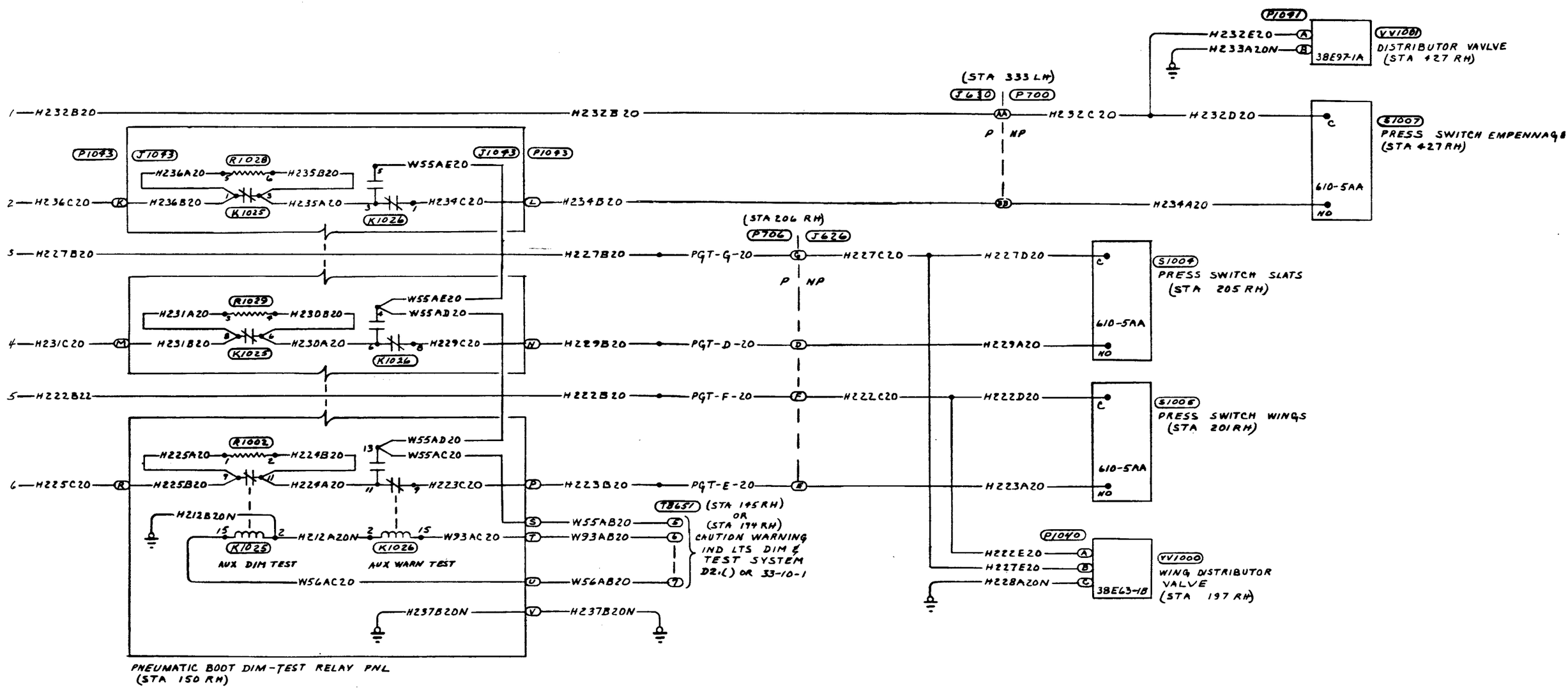

© COPYRIGHT. 1984 BY SABRELINER CORPORATION

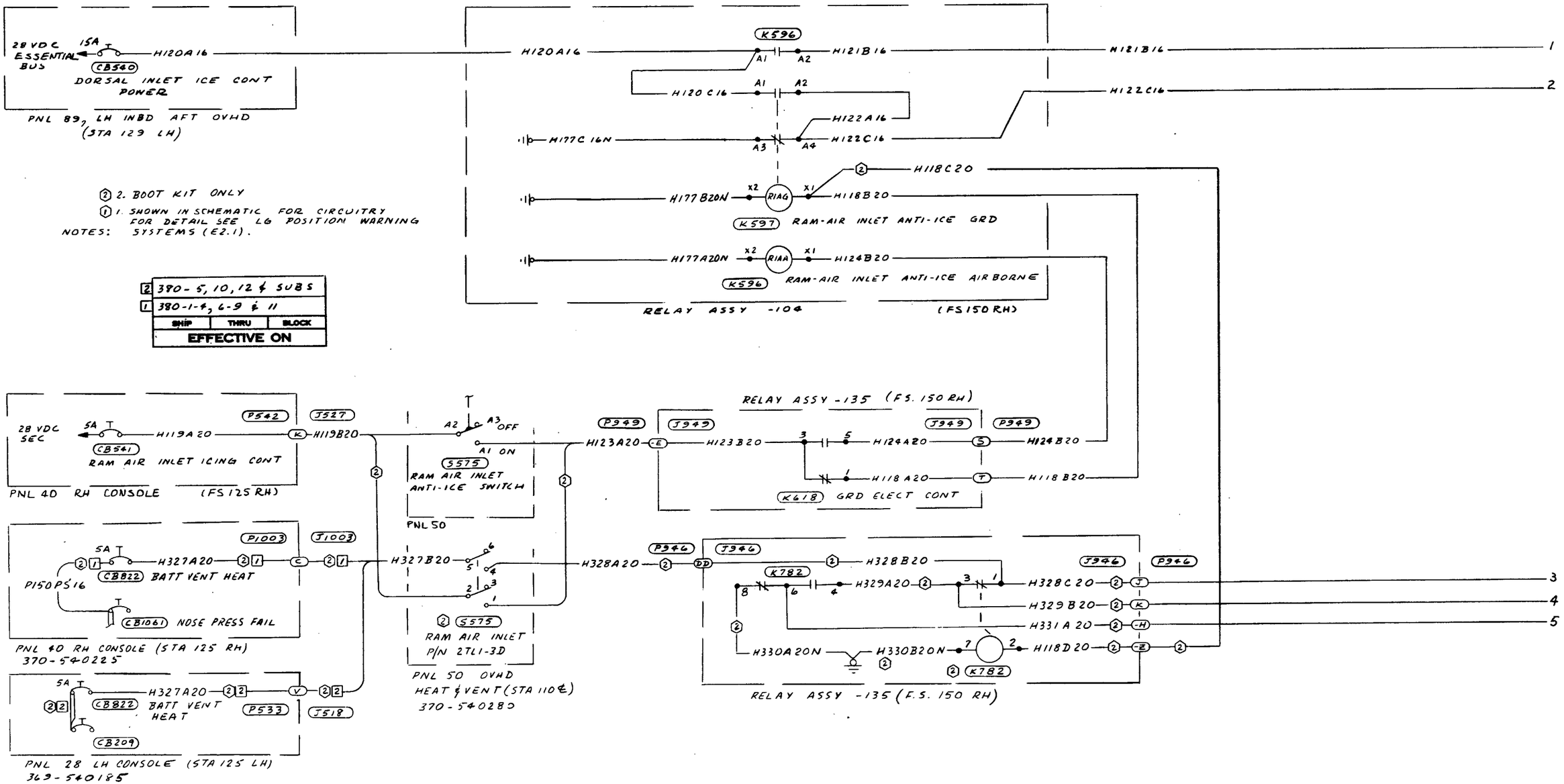

RAM AIR INLETS ANTI-ICE SYSTEM
(Sheet 1 of 2)

© COPYRIGHT, 1981 BY ROCKWELL INTERNATIONAL

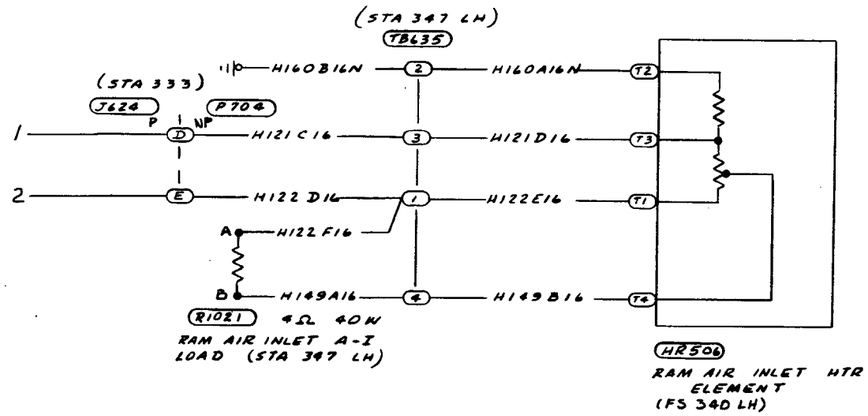

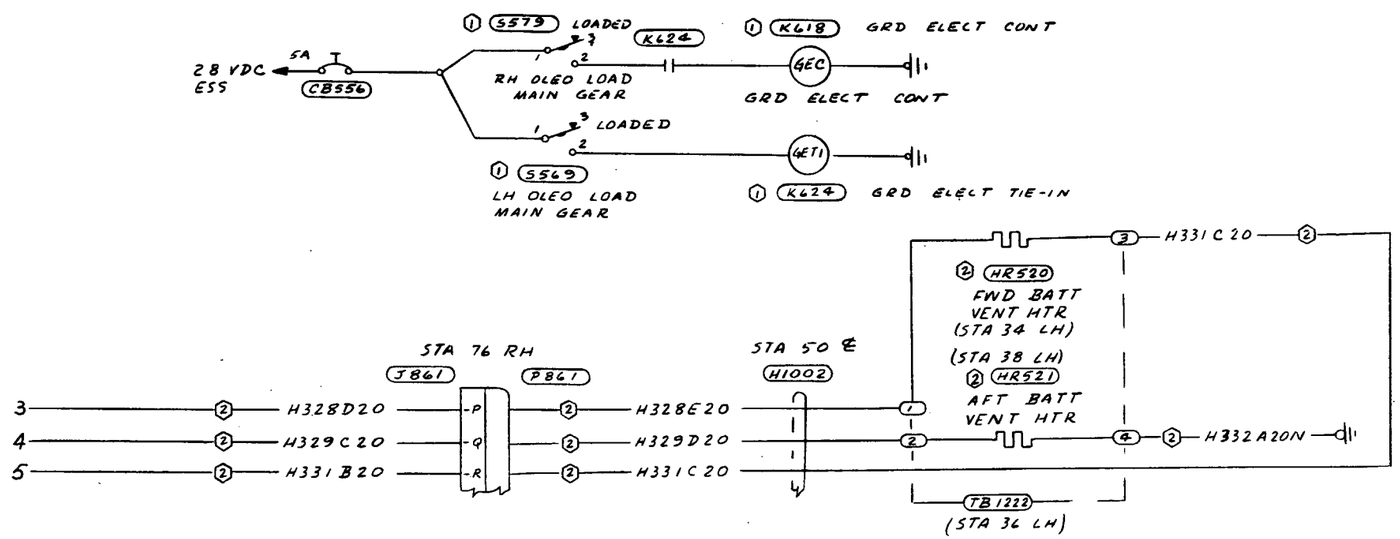

RAM AIR INLETS ANTI-ICE SYSTEM
(Sheet 2 of 2)

© COPYRIGHT, 1981 BY ROCKWELL INTERNATIONAL

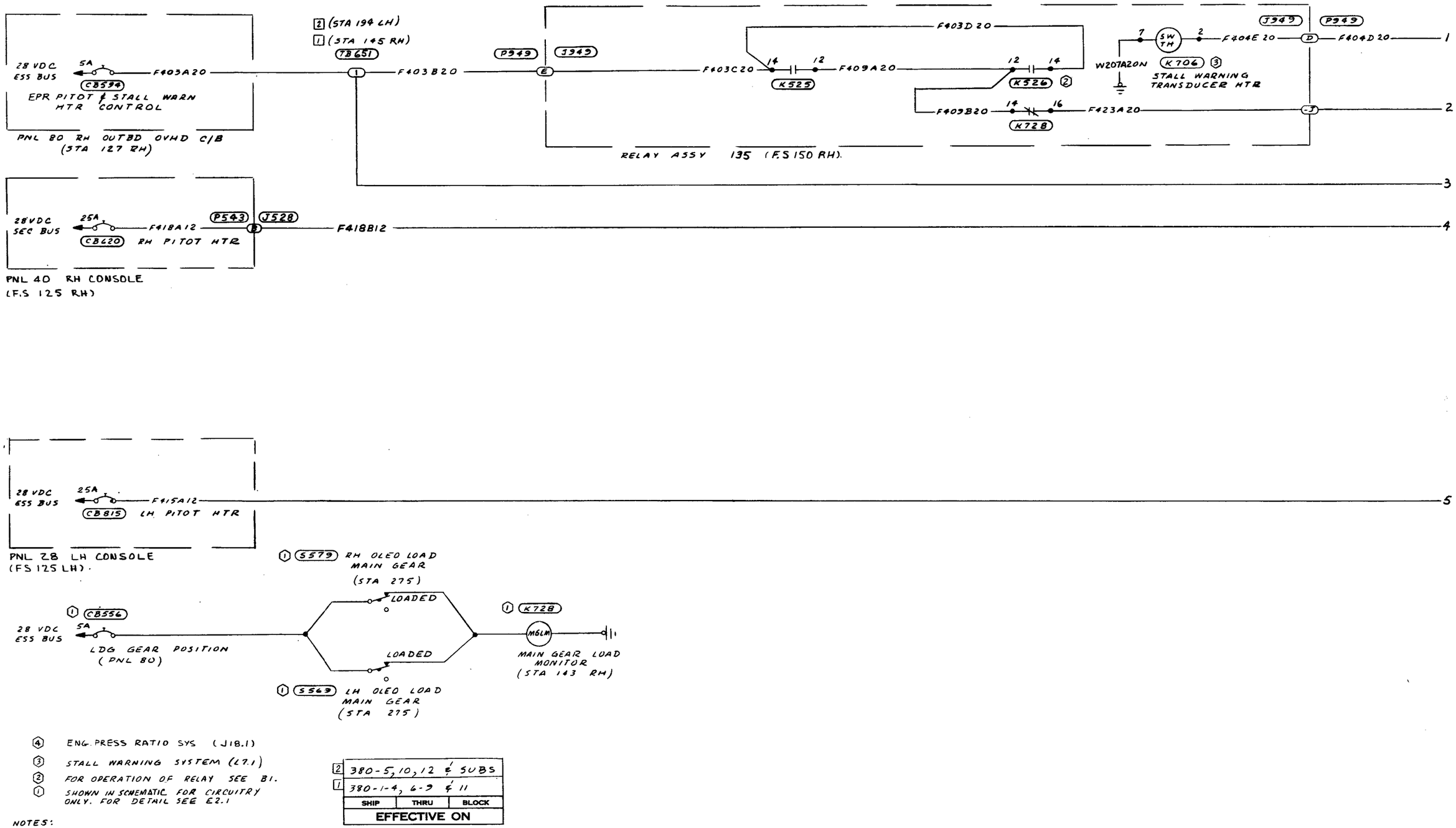

NOTES:

4. ENG. PRESS RATIO SYS (J18.1)
3. STALL WARNING SYSTEM (L7.1)
2. FOR OPERATION OF RELAY SEE B1.
1. SHOWN IN SCHEMATIC FOR CIRCUITRY ONLY. FOR DETAIL SEE E2.1

2	380-5, 10, 12 & SUBS	
1	380-1-4, 6-9 & 11	
SHIP	THRU	BLOCK
EFFECTIVE ON		

PITOT HEAT SYSTEM
(Sheet 1 of 2)

© COPYRIGHT, 1981 BY ROCKWELL INTERNATIONAL

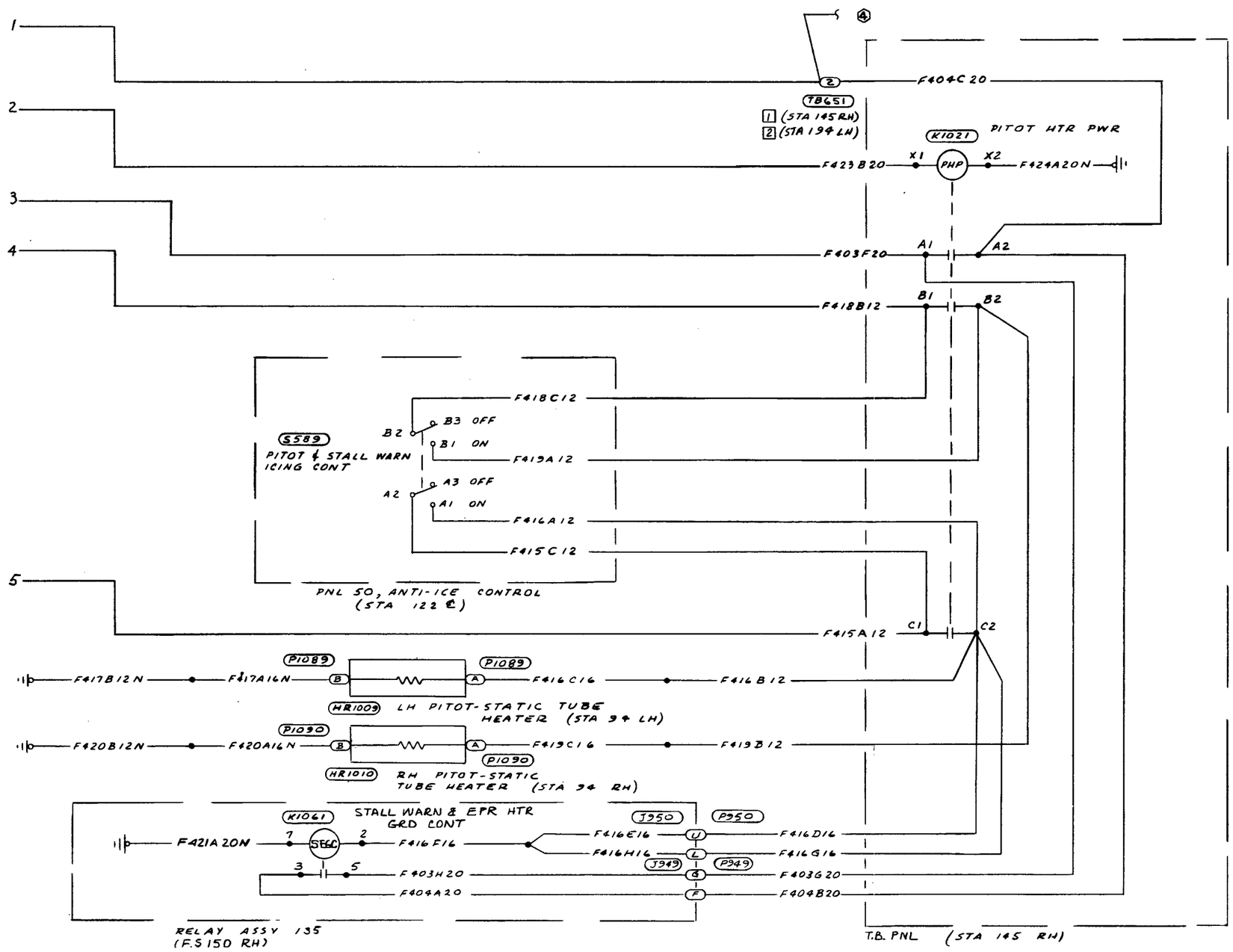

PITOT HEAT SYSTEM
(Sheet 2 of 2)

© COPYRIGHT, 1981 BY ROCKWELL INTERNATIONAL

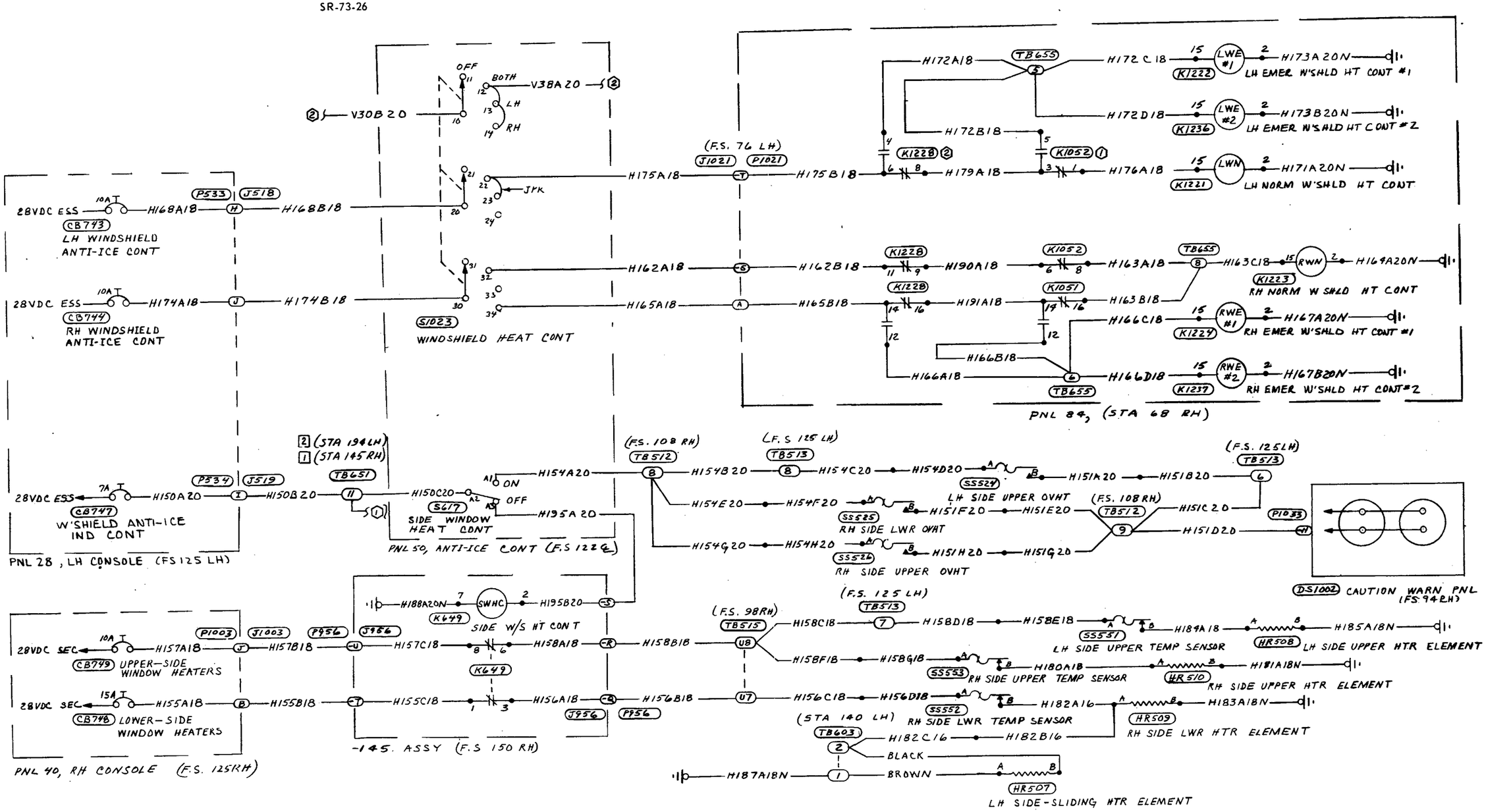

2	380-12 & SUBS
1	380-1-4, 6-9 & 11

SHIP	THRU	BLOCK
EFFECTIVE ON		

NOTES:
(2) 2. SEE B8.1-1 W/S PWR SYS.
(1) 1. SEE G5.1-2 W/S PWR SYS.

WINDSHIELD & SIDE WINDOWS ANTI-ICE CONTROL SYSTEM
(380-1 & Subs 369 Cont Not Included)

© COPYRIGHT 1981 BY ROCKWELL INTERNATIONAL

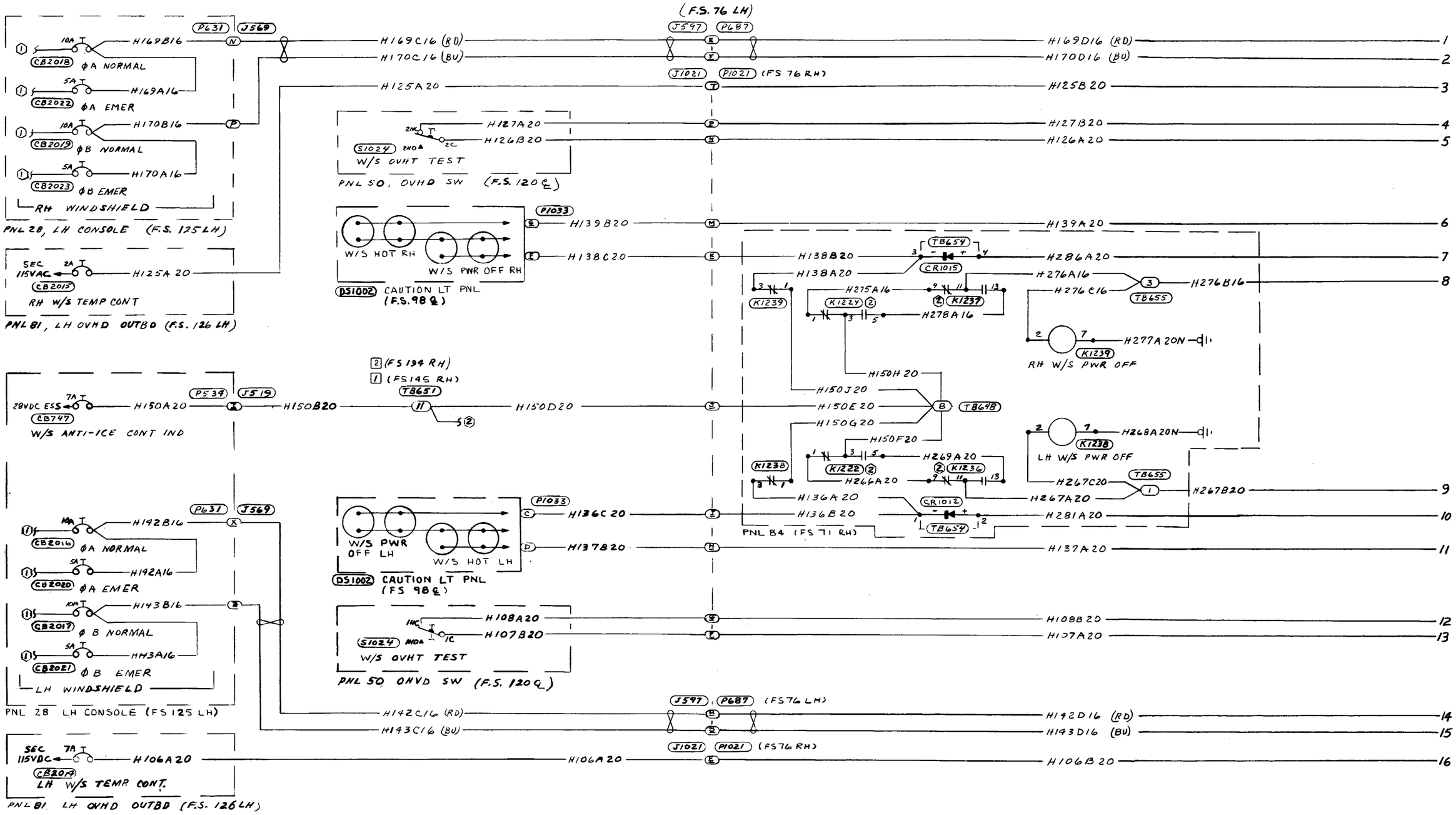

WINDSHIELD ANTI-ICE POWER SYSTEM
S/N 380-1 & Subs, 369 Con't Not Included
(Sheet 1 of 2)

© COPYRIGHT, 1989 BY SABRELINER CORPORATION

G5.1-2	8	7	6	5

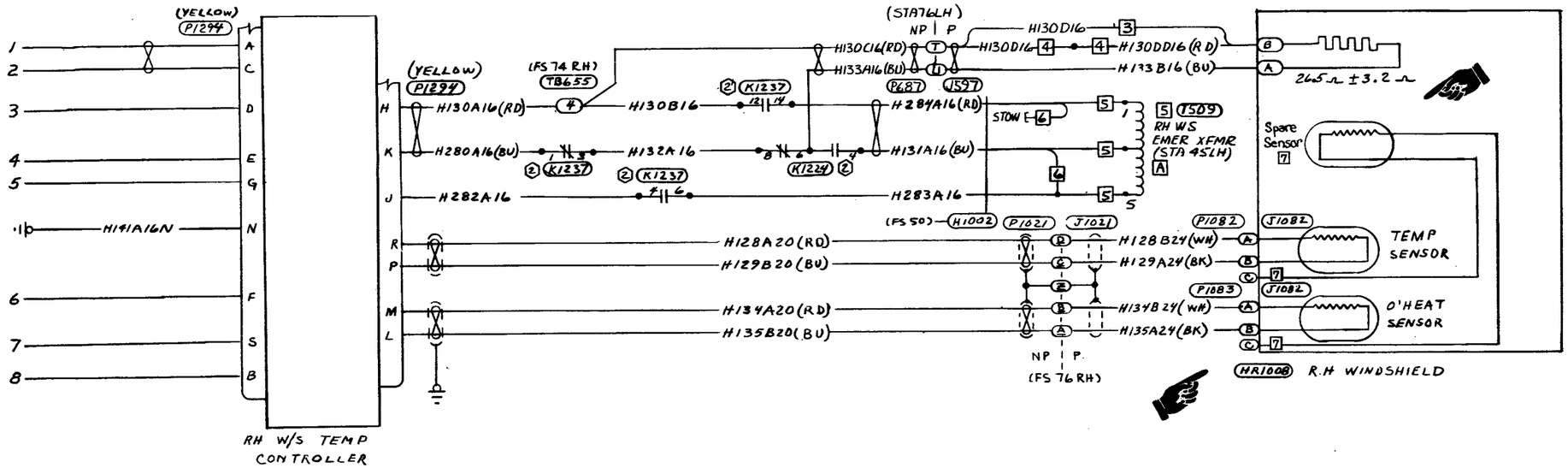

NOTES/LEGEND

1. SEE AC INVERTER SYSTEM B8.1 CHAPTER 24
2. SEE WINDSHIELD AND SIDE WINDOW ANTI-ICE CONTROL SYSTEM G5.1-1 CHAPTER 30

A. USE XFMR TAP # APPLICABLE TO WINDSHIELD
23.3 TO 26 OHMS USE TAP #2
26 TO 27.9 OHMS USE TAP #3
27.9 TO 29.7 OHMS USE TAP #4

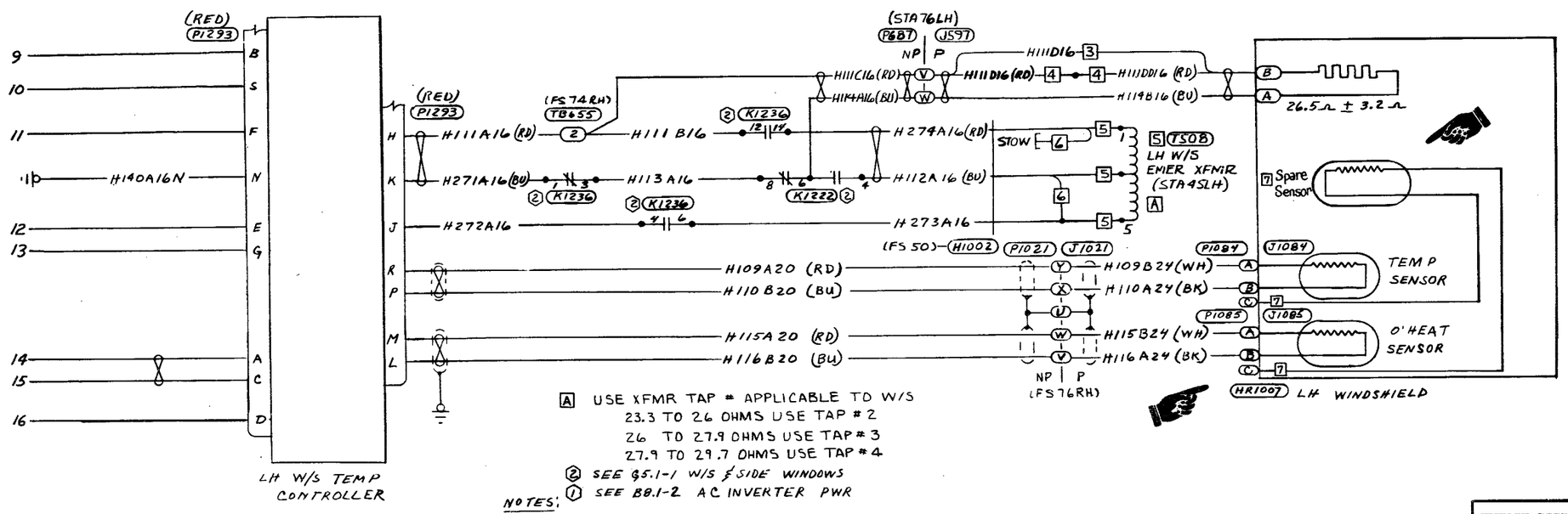

A USE XFMR TAP # APPLICABLE TO W/S
23.3 TO 26 OHMS USE TAP # 2
26 TO 27.9 OHMS USE TAP # 3
27.9 TO 29.7 OHMS USE TAP # 4

NOTES:
2 SEE G5.1-1 W/S & SIDE WINDOWS
1 SEE B8.1-2 AC INVERTER PWR

EFFECTIVITY

1. S/N 380-1 THRU -4, -6 THRU -9 & -11
2. S/N 380-5, -10, -12 & SUBS
3. S/N 380-1 THRU -55
4. S/N 380-56 & SUBS
5. AIRPLANES NOT CHANGED BY S/B 40
6. AIRPLANES CHANGED BY S/B 40
7. AIRPLANES CHANGED BY S/L 82-17

© COPYRIGHT, 1989 BY SABRELINER CORPORATION

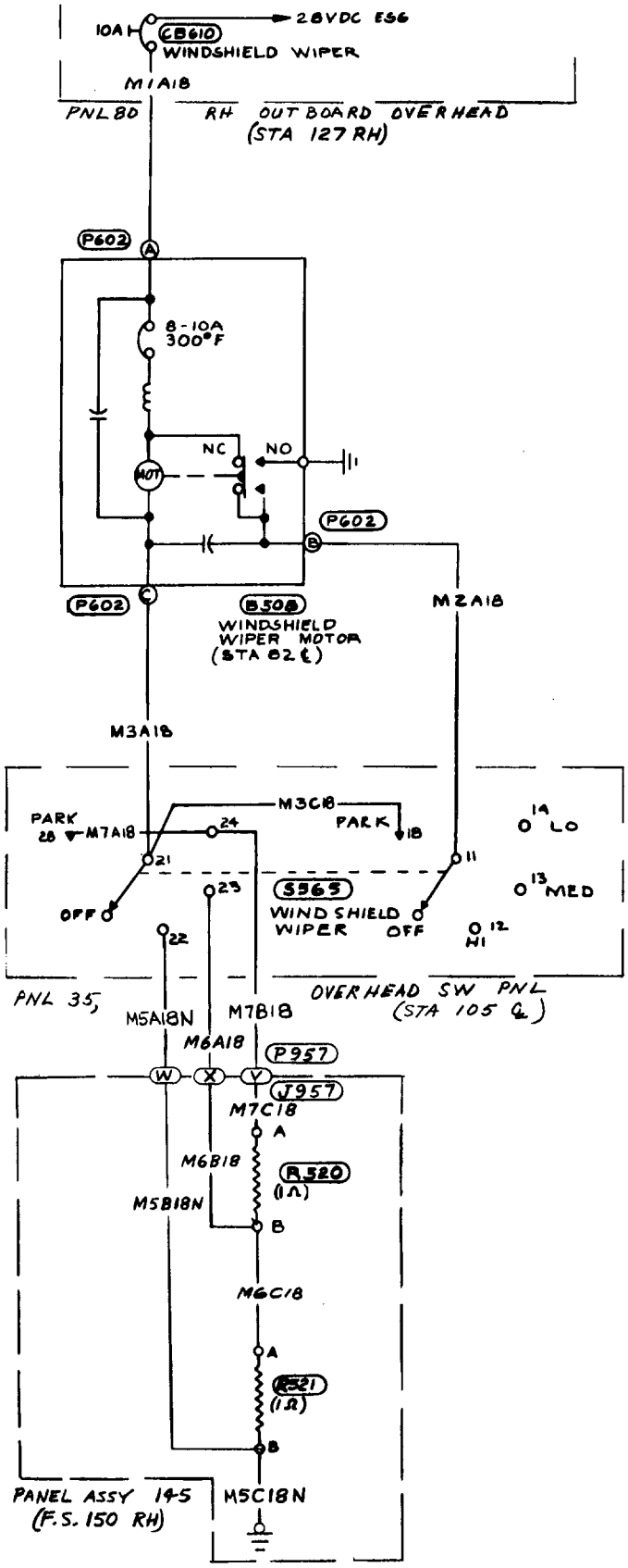

SHIP	THRU	BLOCK
EFFECTIVE ON		

K1.1

WINDSHIELD WIPER SYSTEM

© COPYRIGHT, 1981 BY ROCKWELL INTERNATIONAL

CHAPTER 31

INDICATING/ RECORDING SYSTEMS

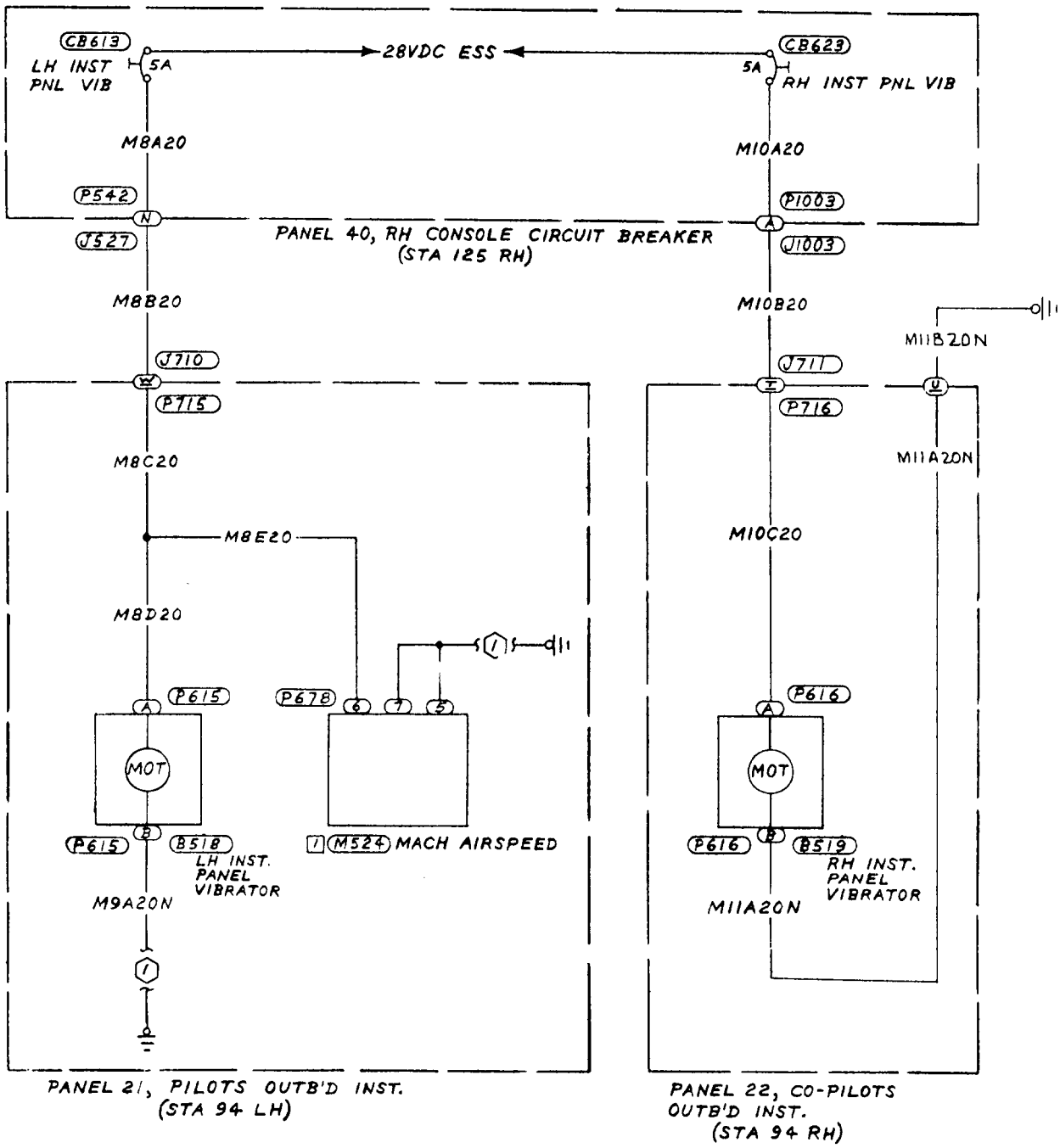

C

B

A

NOTES/LEGEND

1 FOR DETAIL GROUND SEE D18.1 STANDBY COMPASS, PEDESTAL & OVHD INDIRECT LIGHTS SYSTEM.

© COPYRIGHT, 1987 BY
SABRELINER CORPORATION

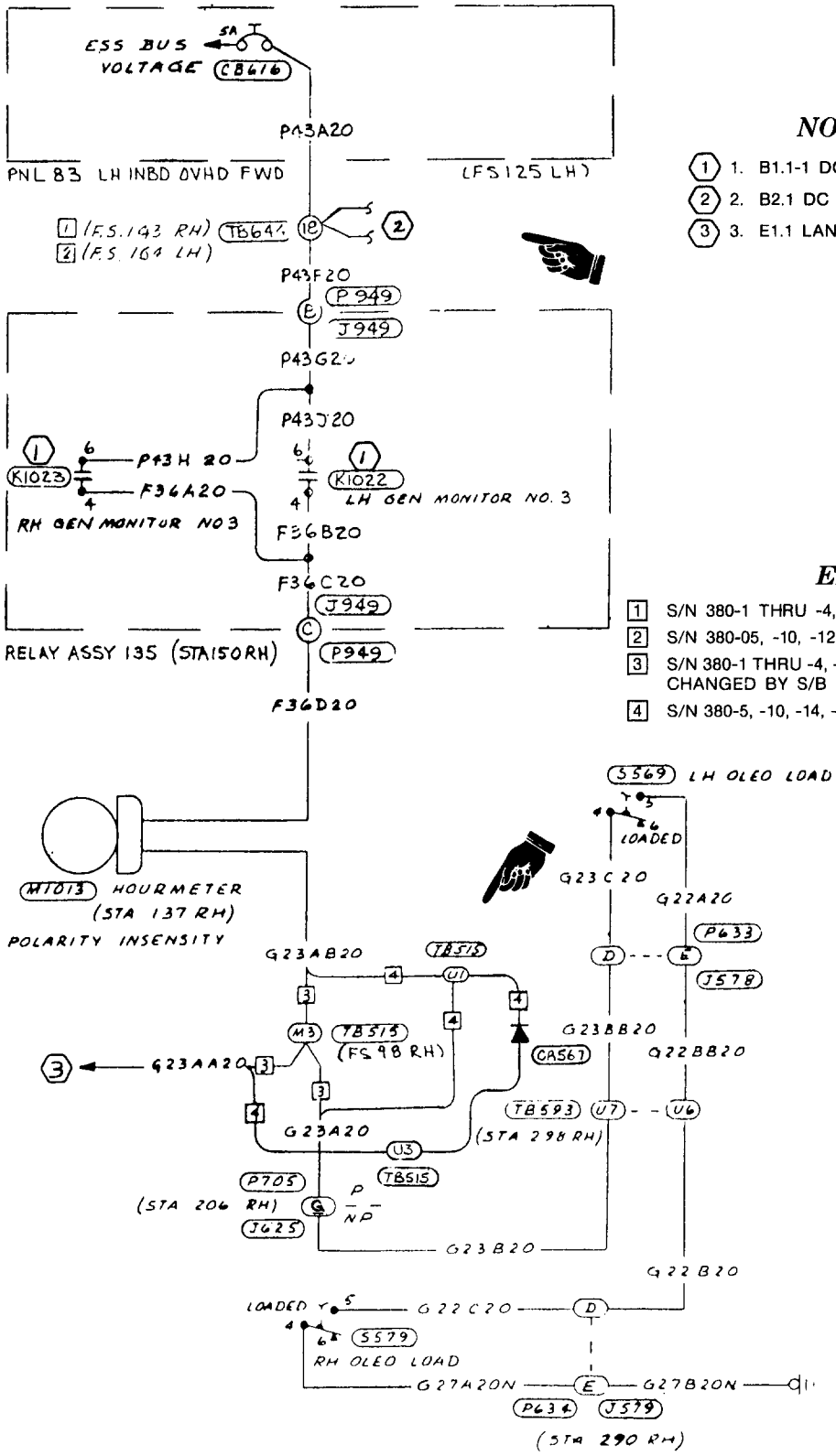

NOTES/LEGEND

1. B1.1-1 DC GENERATOR SYSTEM
2. B2.1 DC BUS TIE-IN SYSTEM
3. E1.1 LANDING GEAR CONTROL SYSTEM

EFFECTIVITY

1. S/N 380-1 THRU -4, -6 THRU -9 & -11
2. S/N 380-05, -10, -12 & SUBS
3. S/N 380-1 THRU -4, -6 THRU -9, -11 THRU -13, -15, -17 & -19 NOT CHANGED BY S/B 75-1
4. S/N 380-5, -10, -14, -17, -18, -20 & SUBS CHANGED BY S/B 75-1

© COPYRIGHT, 1987 BY
SABRELINER CORPORATION

CHAPTER

32

LANDING GEAR

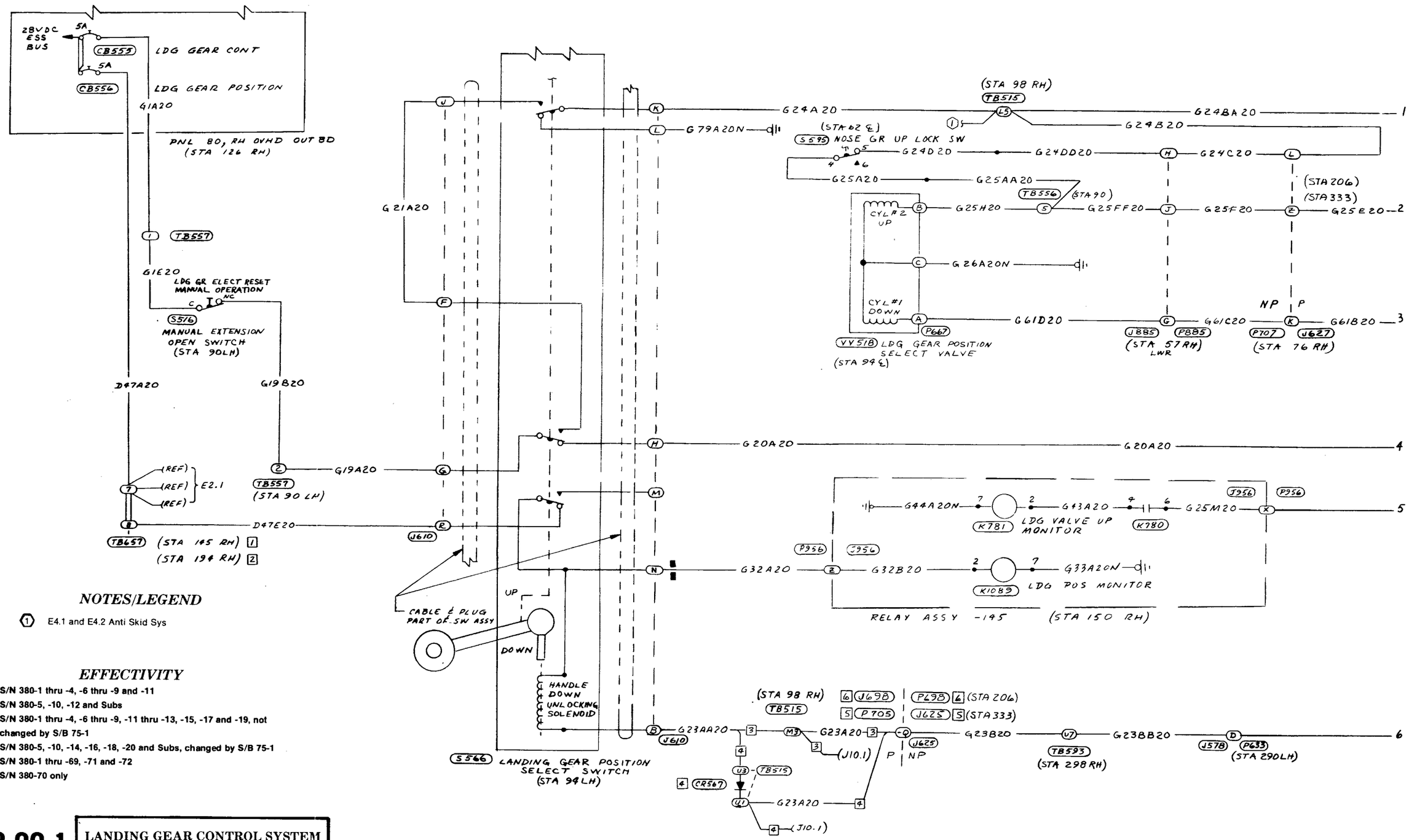

NOTES/LEGEND

(1) E4.1 and E4.2 Anti Skid Sys

EFFECTIVITY

1. S/N 380-1 thru -4, -6 thru -9 and -11
2. S/N 380-5, -10, -12 and Subs
3. S/N 380-1 thru -4, -6 thru -9, -11 thru -13, -15, -17 and -19, not changed by S/B 75-1
4. S/N 380-5, -10, -14, -16, -18, -20 and Subs, changed by S/B 75-1
5. S/N 380-1 thru -69, -71 and -72
6. S/N 380-70 only

LANDING GEAR CONTROL SYSTEM
(Sheet 1 of 2)

E1.1

© COPYRIGHT, 1983 BY ROCKWELL INTERNATIONAL

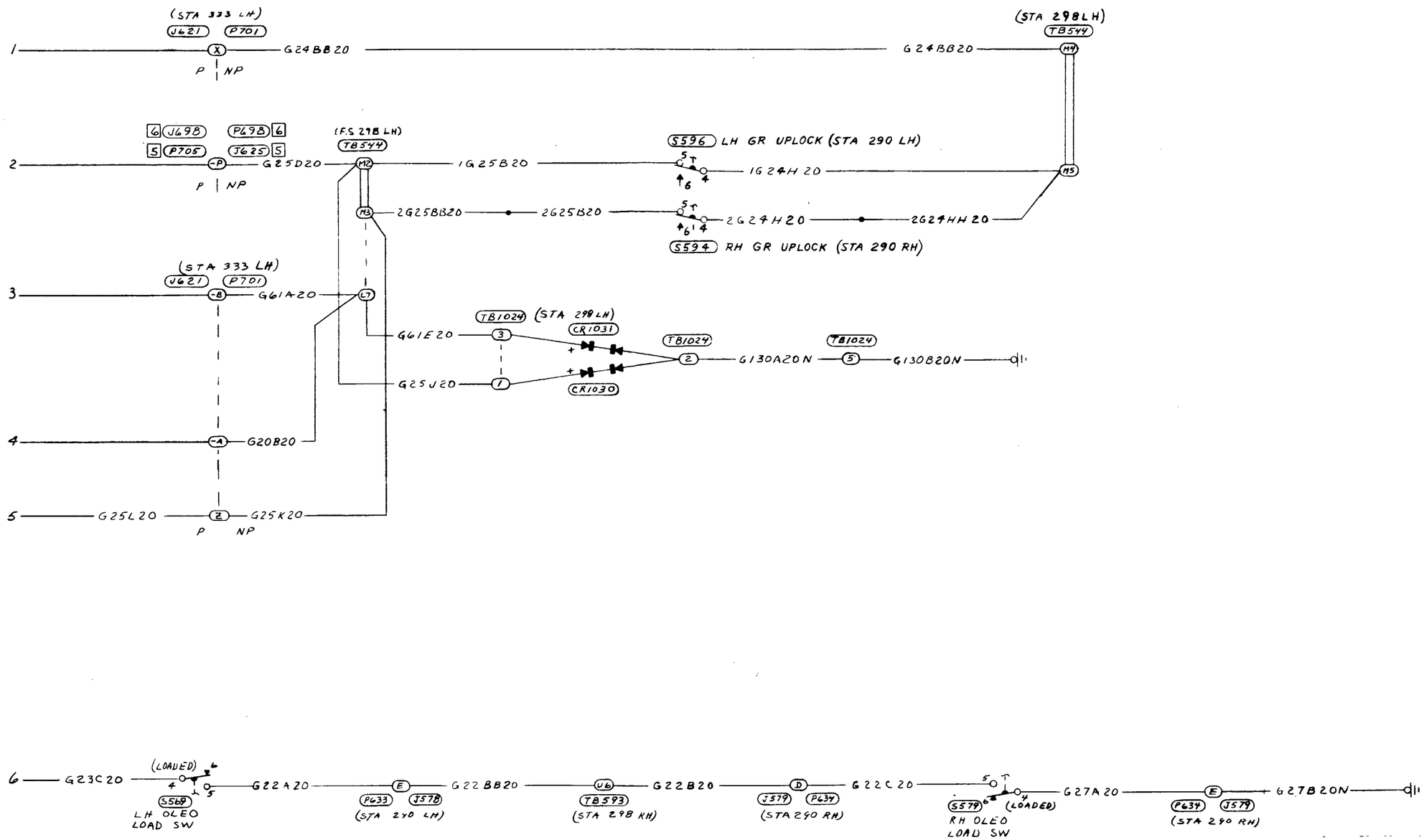

© COPYRIGHT, 1983 BY ROCKWELL INTERNATIONAL

NOTES/LEGEND

1. FOR DETAIL GRD CIRCUIT SEE B7.1
2. FOR DETAIL SEE E1.1 LDG CONT SYSTEM
3. FOR DETAIL SEE E2.1 LDG POS IND AND WARN
4. FOR OPERATION SEE D2.1

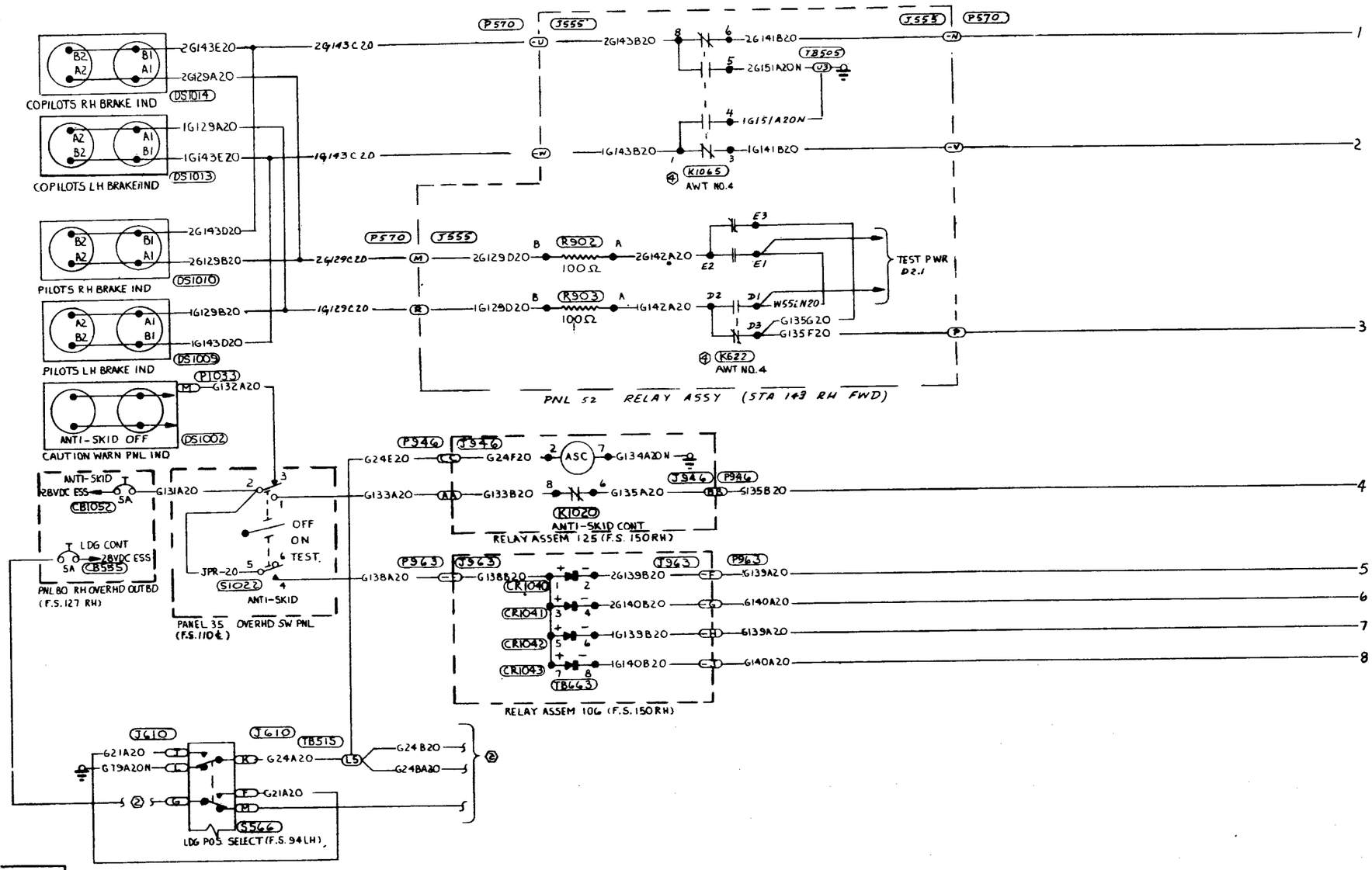

MODULATING ANTI-SKID CONTROL SYSTEM
(380-1 Thru -4, -6 Thru -9, & -11)
(Sheet 1 of 3)

© COPYRIGHT, 1984 BY SABRELINER CORPORATION

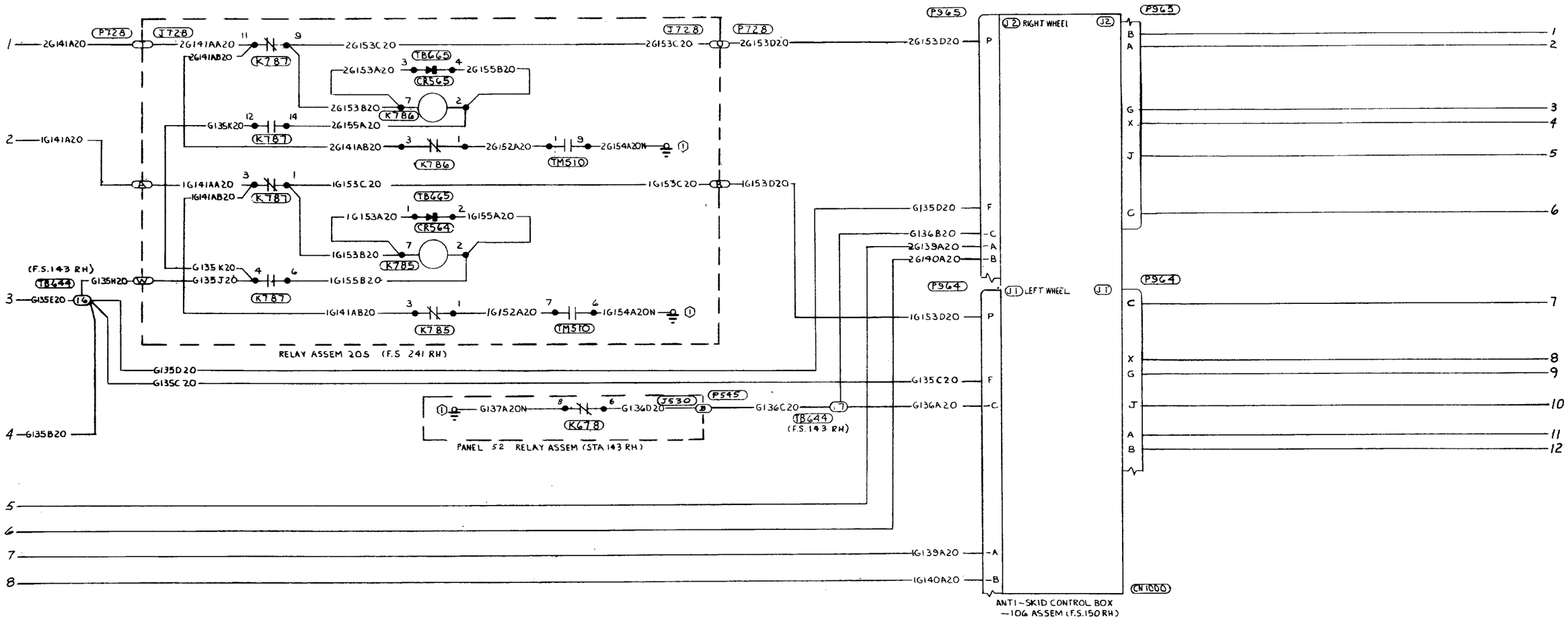

MODULATING ANTI-SKID CONTROL SYSTEM
(380-1 Thru -4, -6 Thru -9, & -11)
(Sheet 2 of 3)

© COPYRIGHT, 1984 BY SABRELINER CORPORATION

11	10	9	8	7	6	E4.1

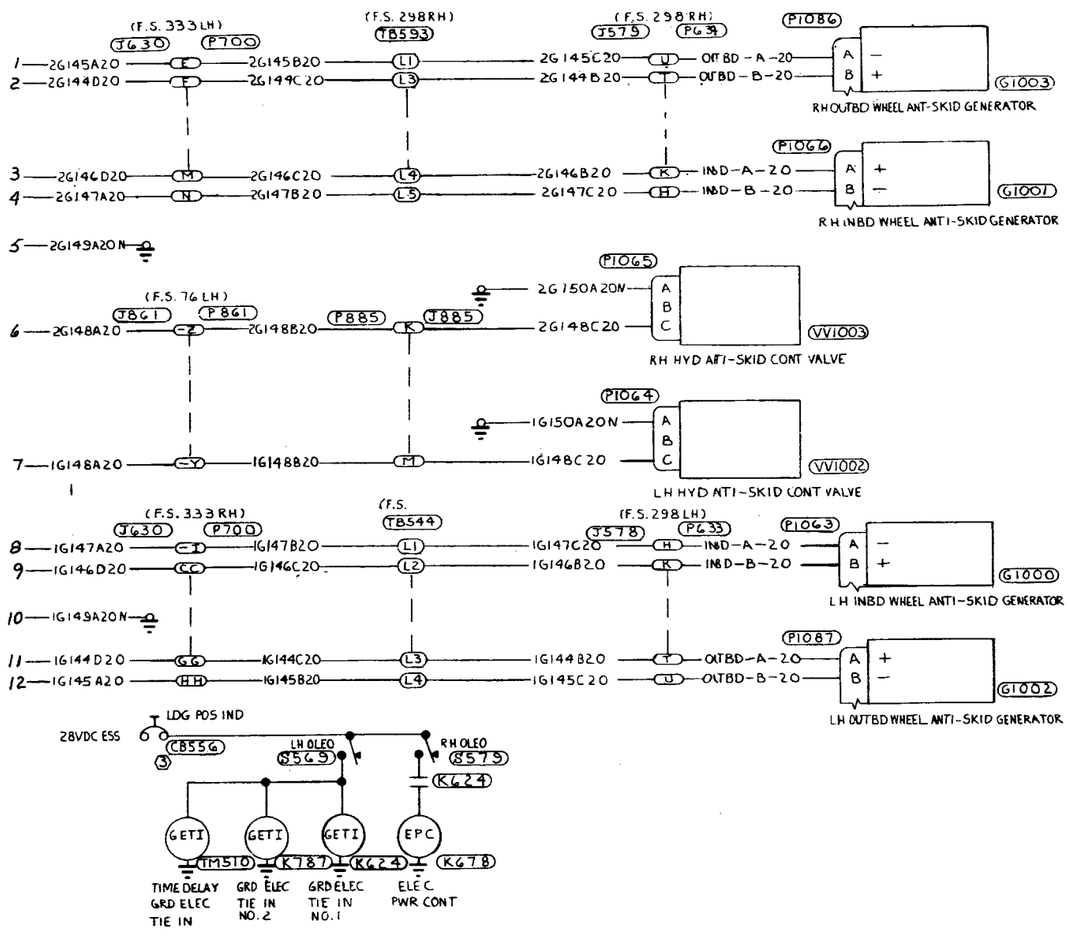

MODULATING ANTI-SKID CONTROL SYSTEM
(380-1 Thru -4, -6 Thru -9, & -11)
(Sheet 3 of 3)

© COPYRIGHT, 1984 BY SABRELINER CORPORATION

5	4	3	E4.1

NOTES/LEGEND

1. FOR DETAIL GRD CIRCUIT SEE B7.1
2. FOR DETAIL SE E1.1 LDG CONT SYSTEM
3. FOR DETAIL SEE E2.1 LDG POS IND AND WARN
4. FOR OPERATION SEE D2.1

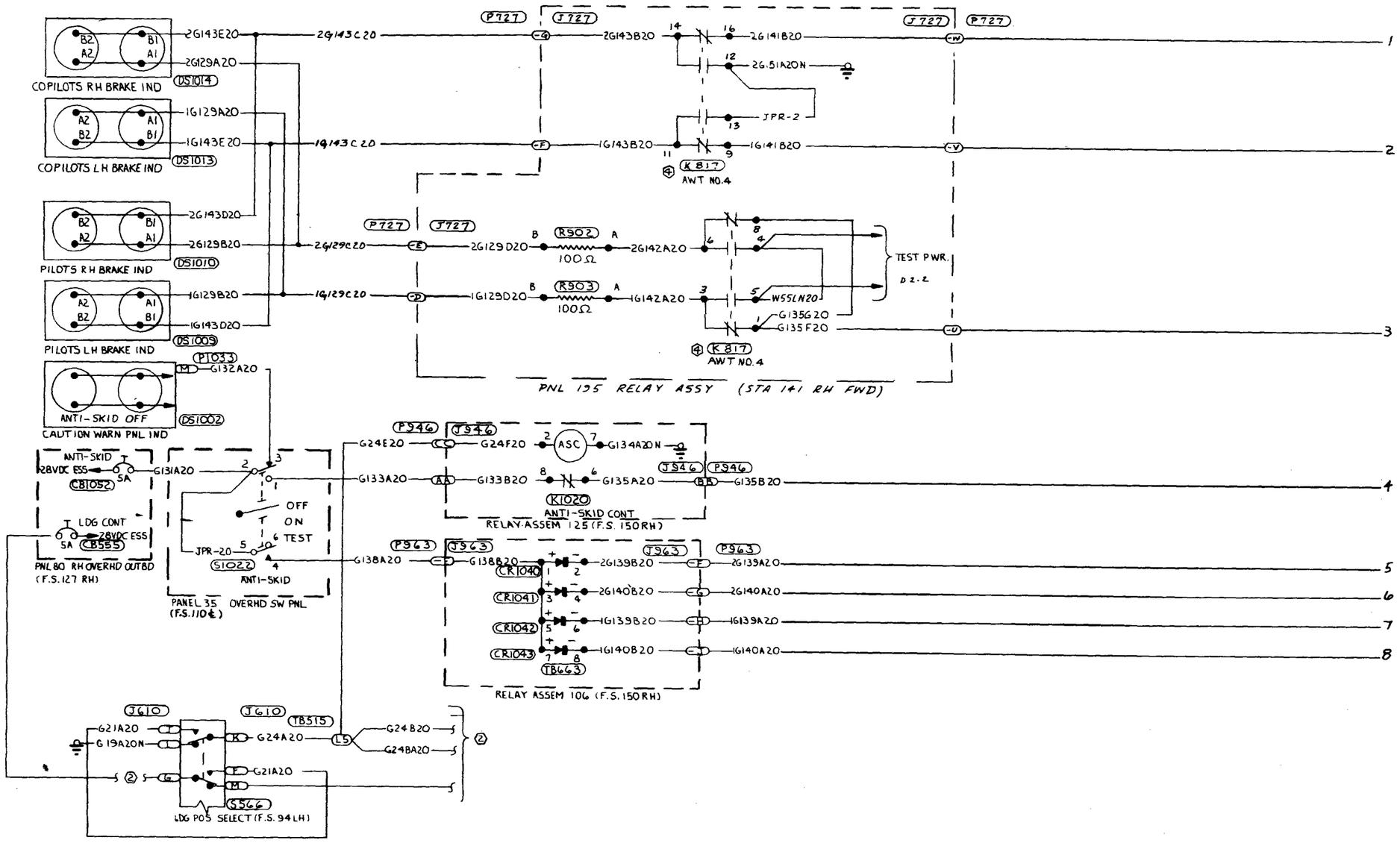

MODULATING ANTI-SKID CONTROL SYSTEM
(380-5, -10, -12, & Subs)
(Sheet 1 of 3)

© COPYRIGHT, 1984 BY SABRELINER CORPORATION

E4.2	15	14	13	12

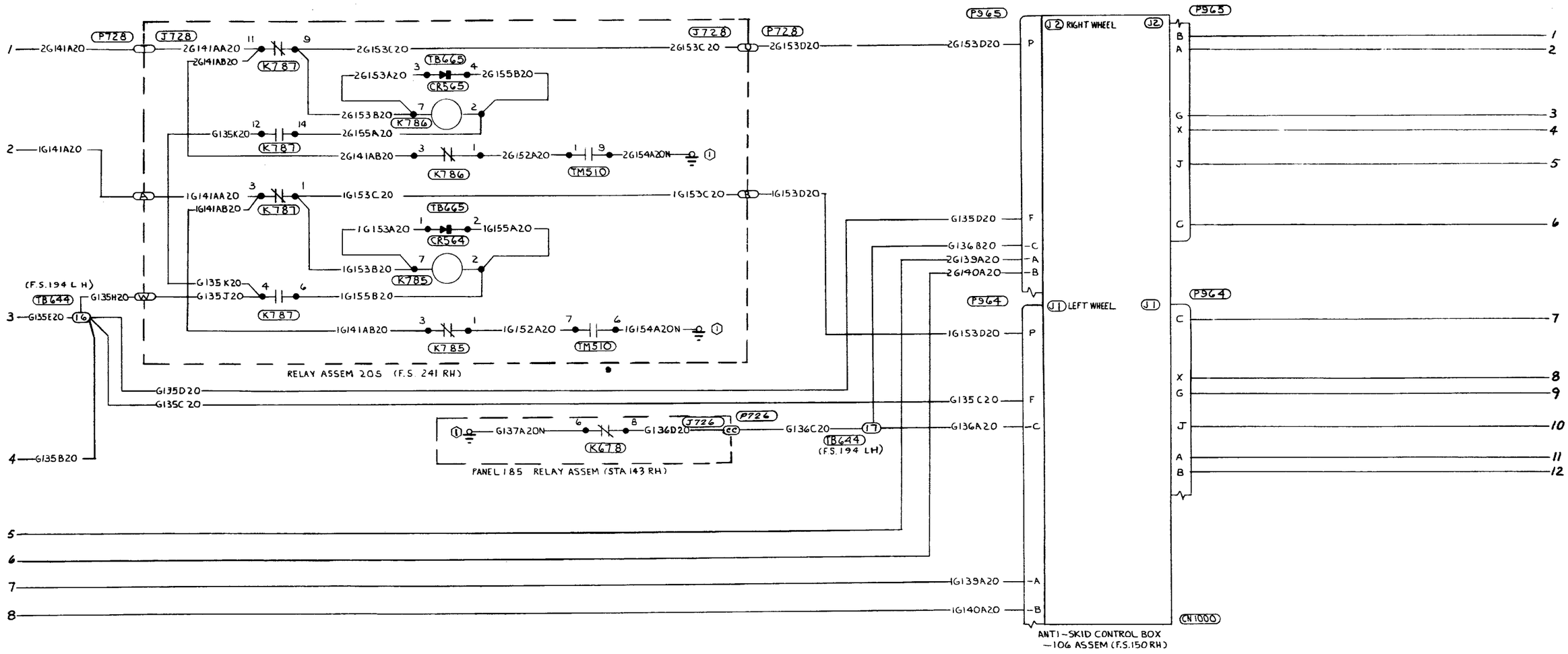

MODULATING ANTI-SKID CONTROL SYSTEM
(380-5, -10, -12, & Subs)
(Sheet 2 of 3)

© COPYRIGHT, 1984 BY SABRELINER CORPORATION

11	10	9	8	7	6	E4.2

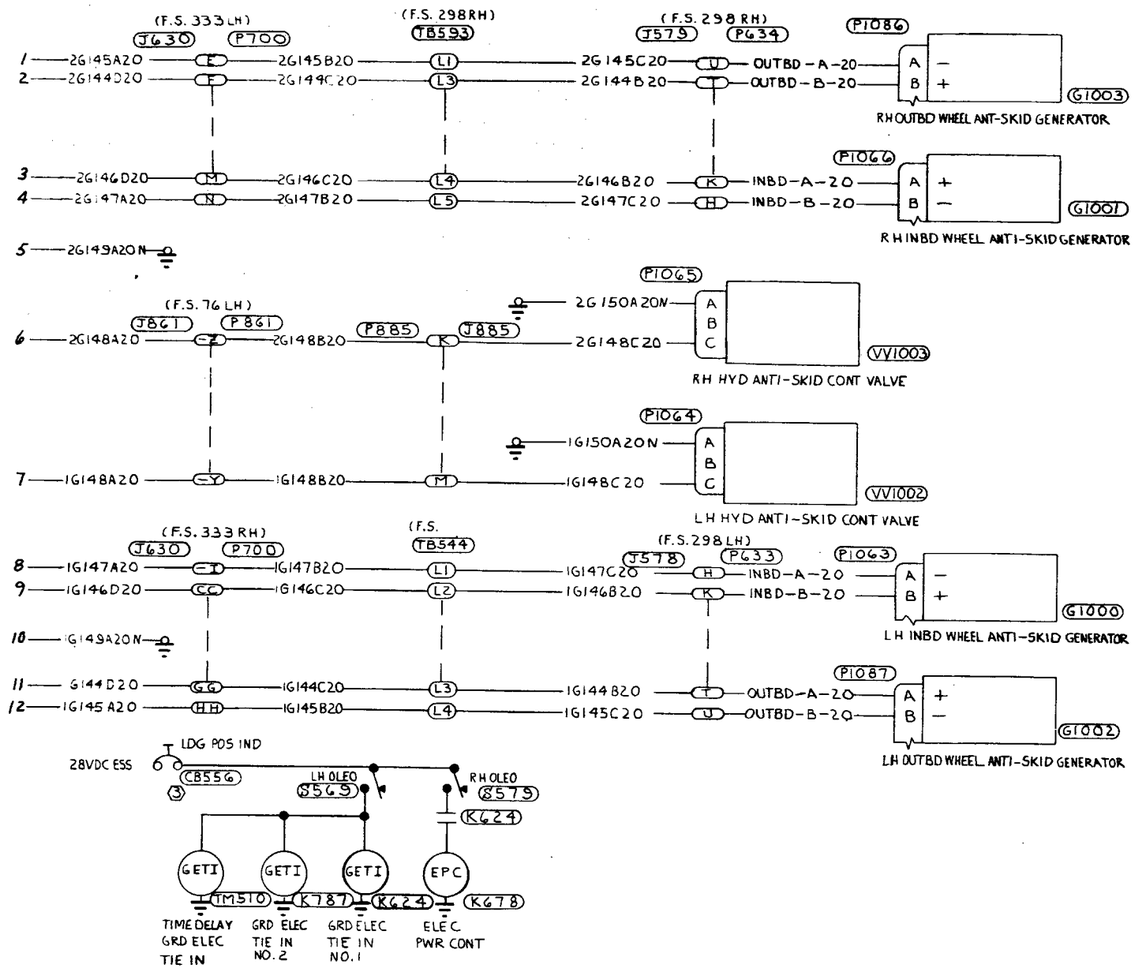

© COPYRIGHT, 1984 BY SABRELINER CORPORATION

MODULATING ANTI-SKID CONTROL SYSTEM
(380-5, -10, -12, & Subs)
(Sheet 3 of 3)

5	4	3	E4.2

NOTES/LEGEND

1. FOR ACTUATION & TEST POWER SEE D2.1 CAUTION WARNING, IND & DIM & TEST SYSTEM.
2. SHOWN IN SCHEMATIC FORM FOR CIRCUITRY, SEE E2.1 LDG GR POSITION IND & WARNING SYSTEM
3. UNIDENTIFIED JUMPER
4. SW MECHANICALLY OPERATED BY NOSE GEAR ROTATION.
5. SW MECHANICALLY OPERATED BY RUDDER PEDALS.
6. FOR DETAIL GRD CIRCUIT SEE B7.1

EFFECTIVITY

[1] 380-1 THRU -11

[2] 380-12 AND -27

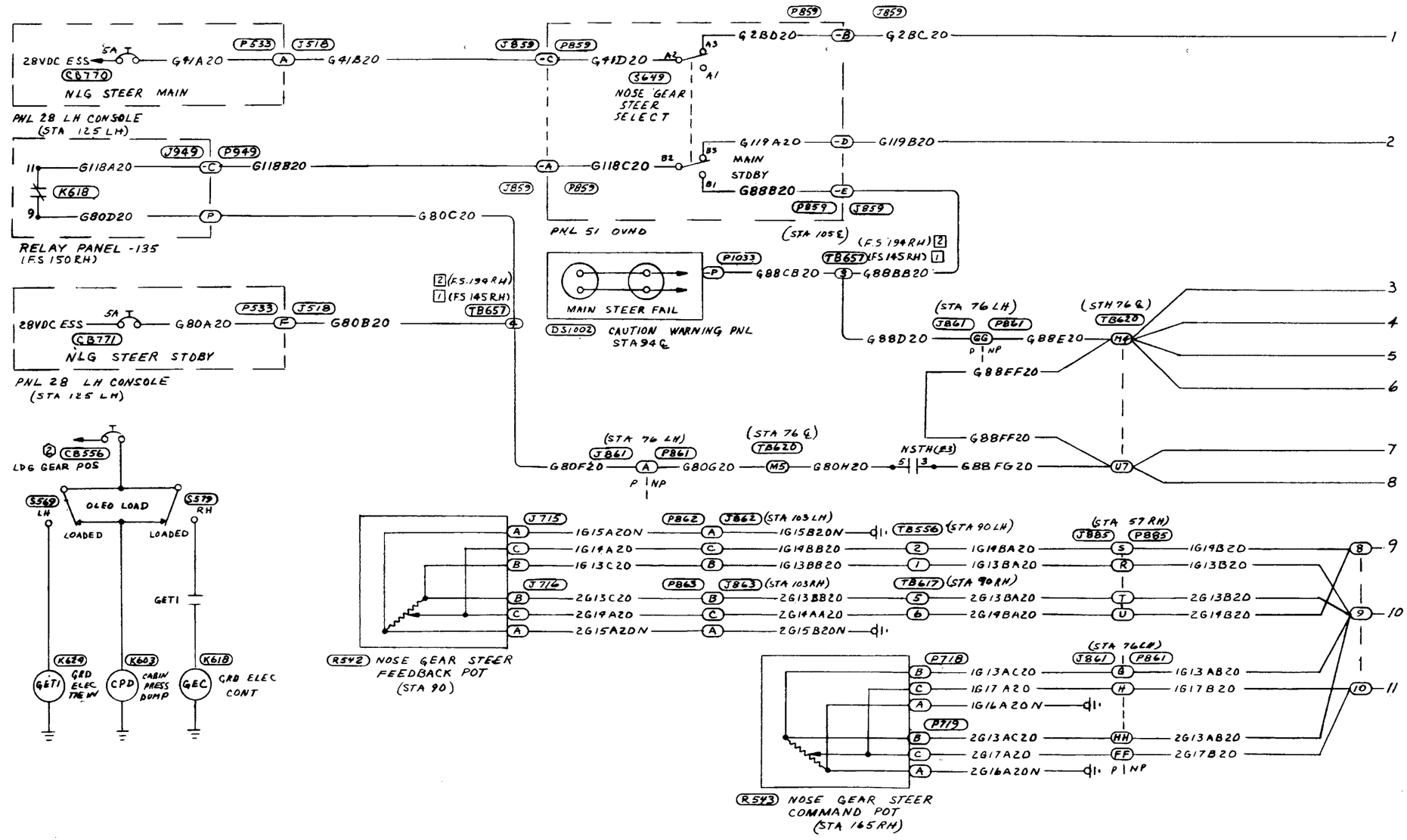

NOSE GEAR STEER SYSTEM
(380-1 Thru -27)
(Sheet 1 of 5)

© COPYRIGHT, 1984 BY SABRELINER CORPORATION

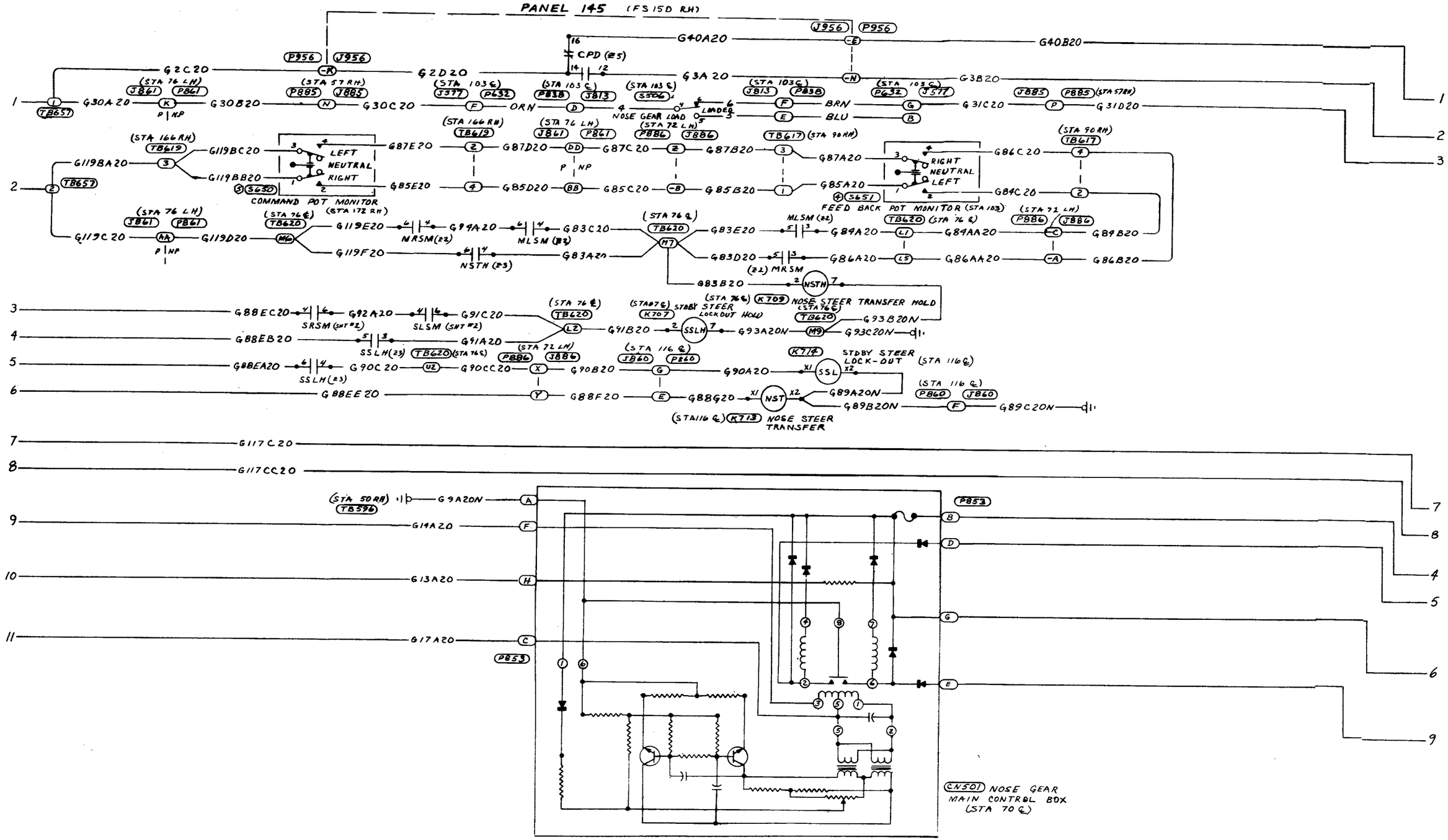

© COPYRIGHT, 1984 BY SABRELINER CORPORATION

NOSE GEAR STEER SYSTEM
(380-1 Thru -27)
(Sheet 2 of 5)

4	3	2	E3.1-1

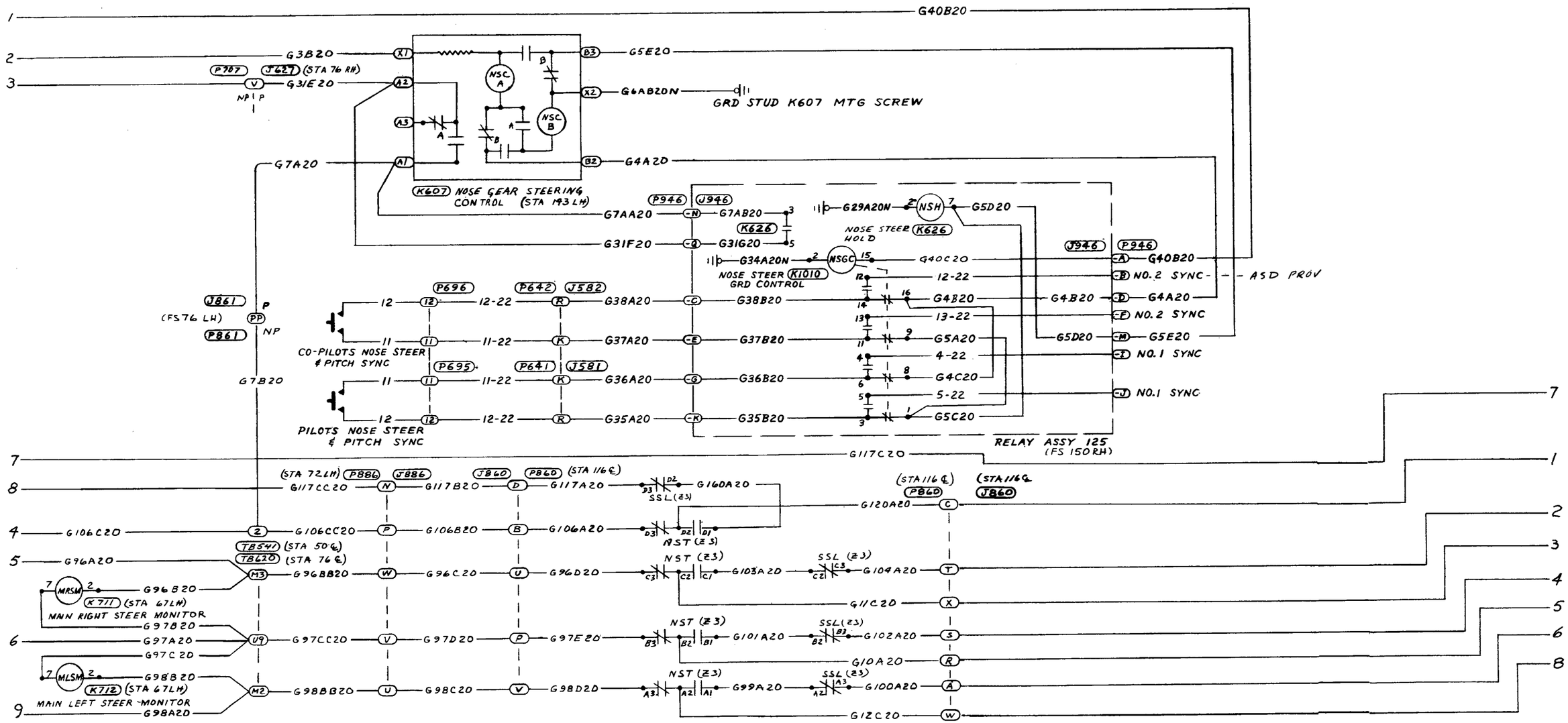

NOSE GEAR STEER SYSTEM
(380-1 Thru -27)
(Sheet 3 of 5)

32-50-1
Page 5/6 Blank
Feb 3/84

© COPYRIGHT, 1984 BY SABRELINER CORPORATION

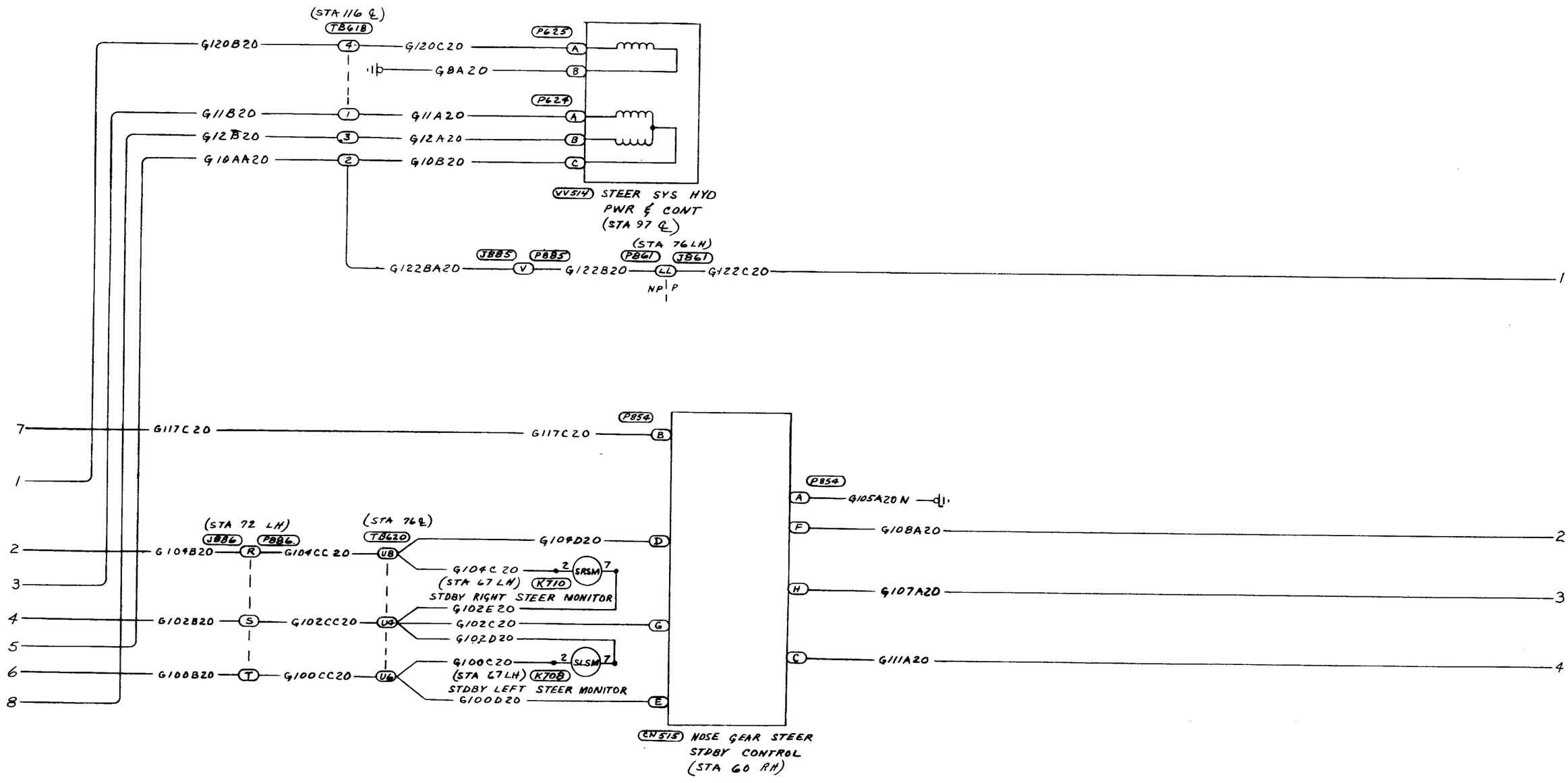

32-50-1
Page 7 Blank/8
Feb 3/84

NOSE GEAR STEER SYSTEM
(380-1 Thru -27)
(Sheet 4 of 5)

E3.1-2 | 4 | 3

© COPYRIGHT, 1984 BY SABRELINER CORPORATION

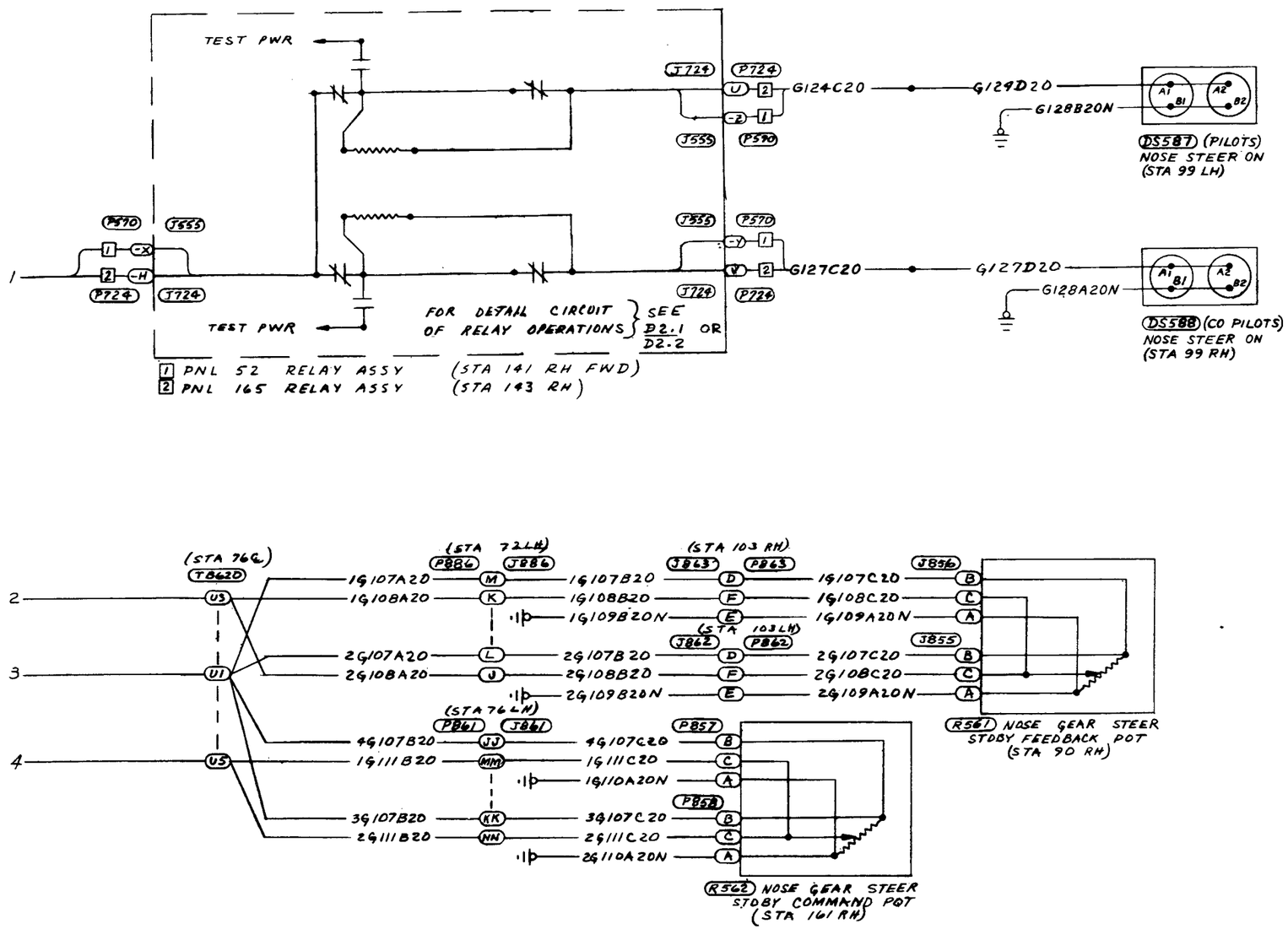

NOSE GEAR STEER SYSTEM
(380-1 Thru -27)
(Sheet 5 of 5)

© COPYRIGHT, 1984 BY SABRELINER CORPORATION

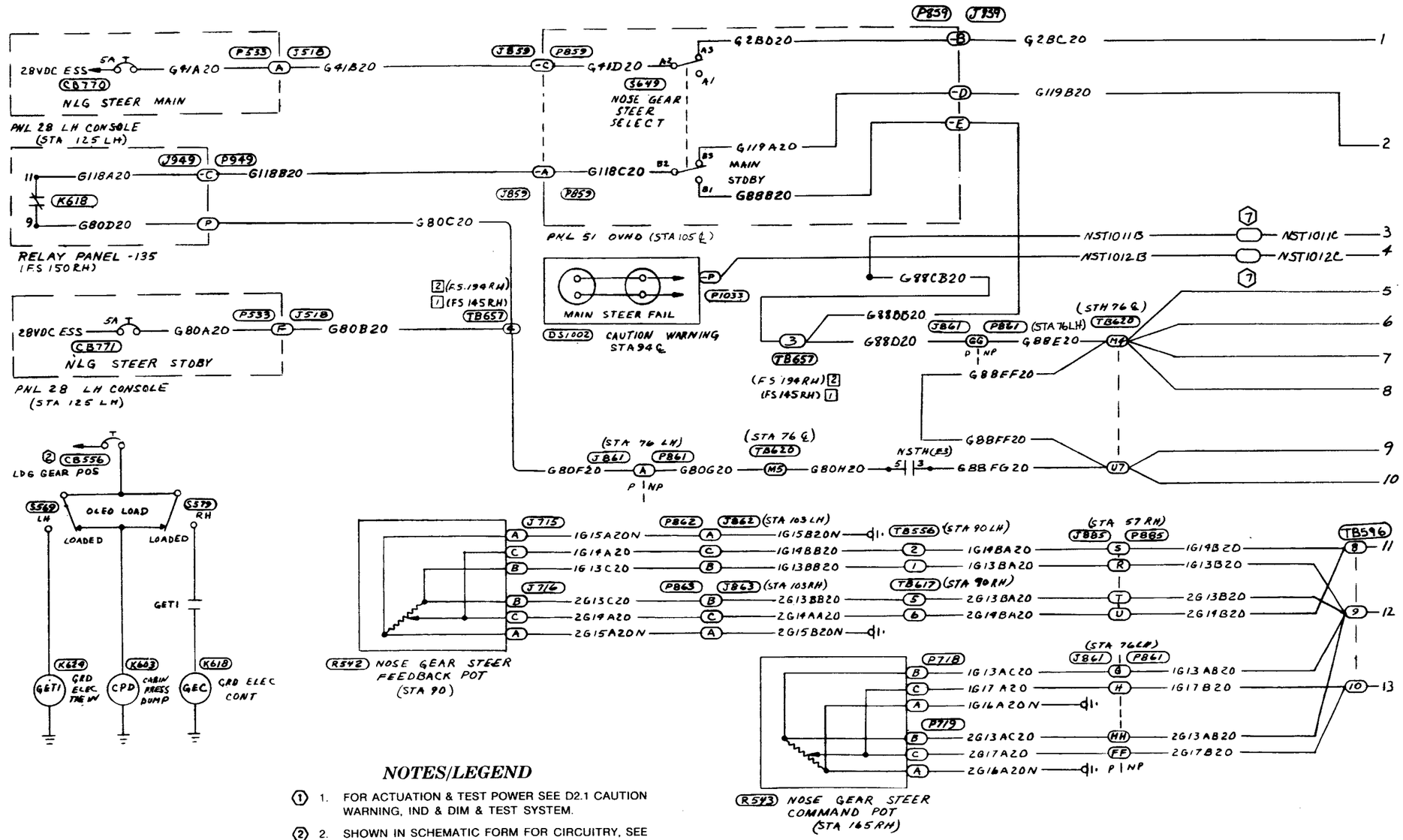

NOTES/LEGEND

1. FOR ACTUATION & TEST POWER SEE D2.1 CAUTION WARNING, IND & DIM & TEST SYSTEM.
2. SHOWN IN SCHEMATIC FORM FOR CIRCUITRY, SEE E2.1 LDG GR POSITION IND & WARNING SYSTEM
3. UNINDENTIFIED JUMPER
4. SW MECHANICALLY OPERATED BY NOSE GEAR ROTATION
5. SW MECHANICALLY OPERATED BY RUDDER PEDALS.
6. FOR DETAIL GRD CIRCUIT SEE B7.1
7. REFER TO S/B 85-2 TO IDENTIFY FS 76 BULKHEAD FEED-THROUGH CONNECTOR PINS USED DURING INSTALLATION OF NOSE WHEEL STEERING TEST SYSTEM.

EFFECTIVITY

1 S/N 380-1 THRU -11
2 S/N 380-12 AND -27

NEW

NOSE GEAR STEER SYSTEM
(S/N 380-1 Thru -27 Changed by S/B 85-2)
(Sheet 1 of 5)

© COPYRIGHT, 1986 BY SABRELINER CORPORATION

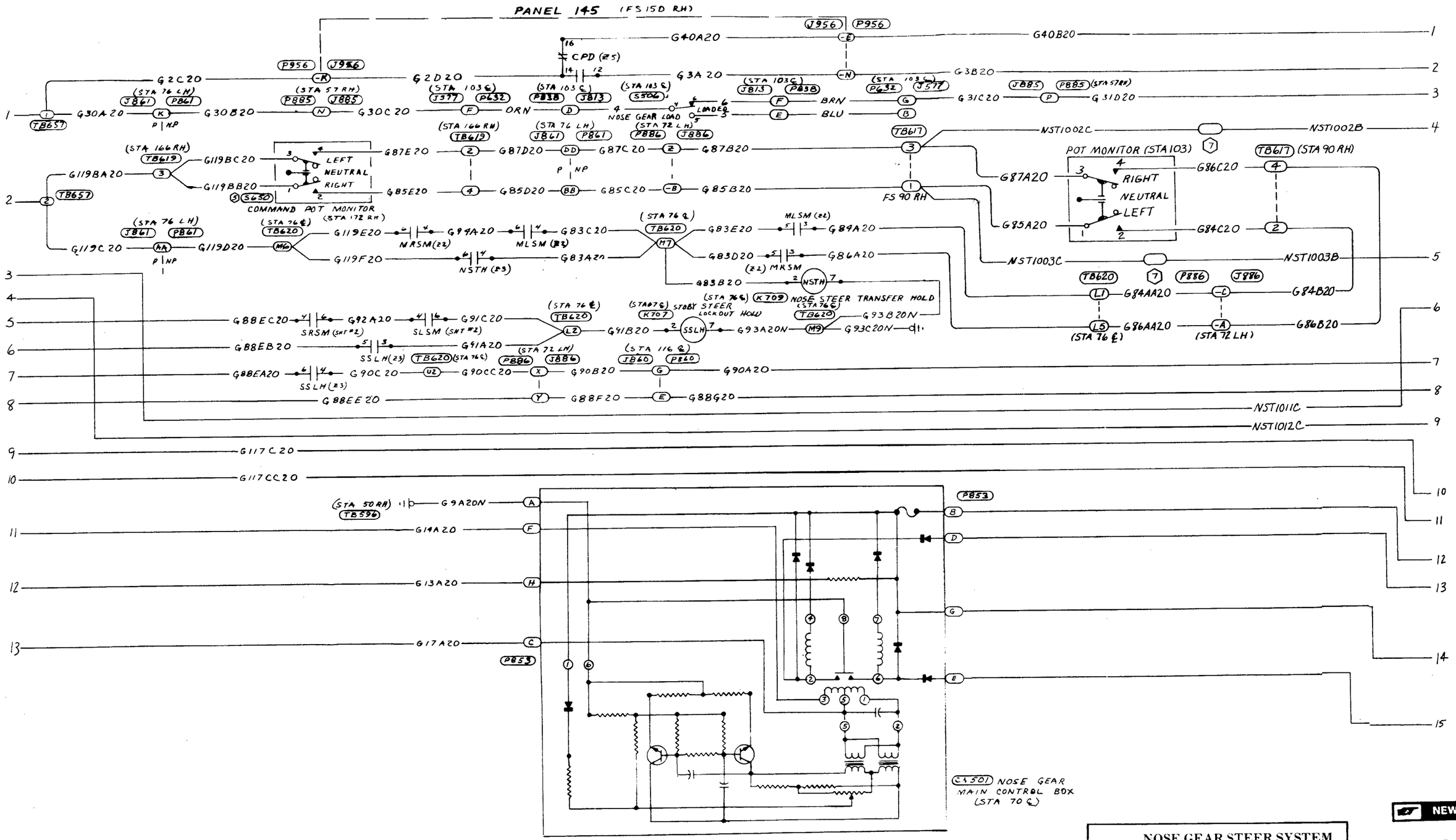

NOSE GEAR STEER SYSTEM
(S/N 380-1 Thru -27 Changed by S B 85-2)
(Sheet 2 of 5)

NEW

32-50-1

© COPYRIGHT, 1986 BY SABRELINER CORPORATION

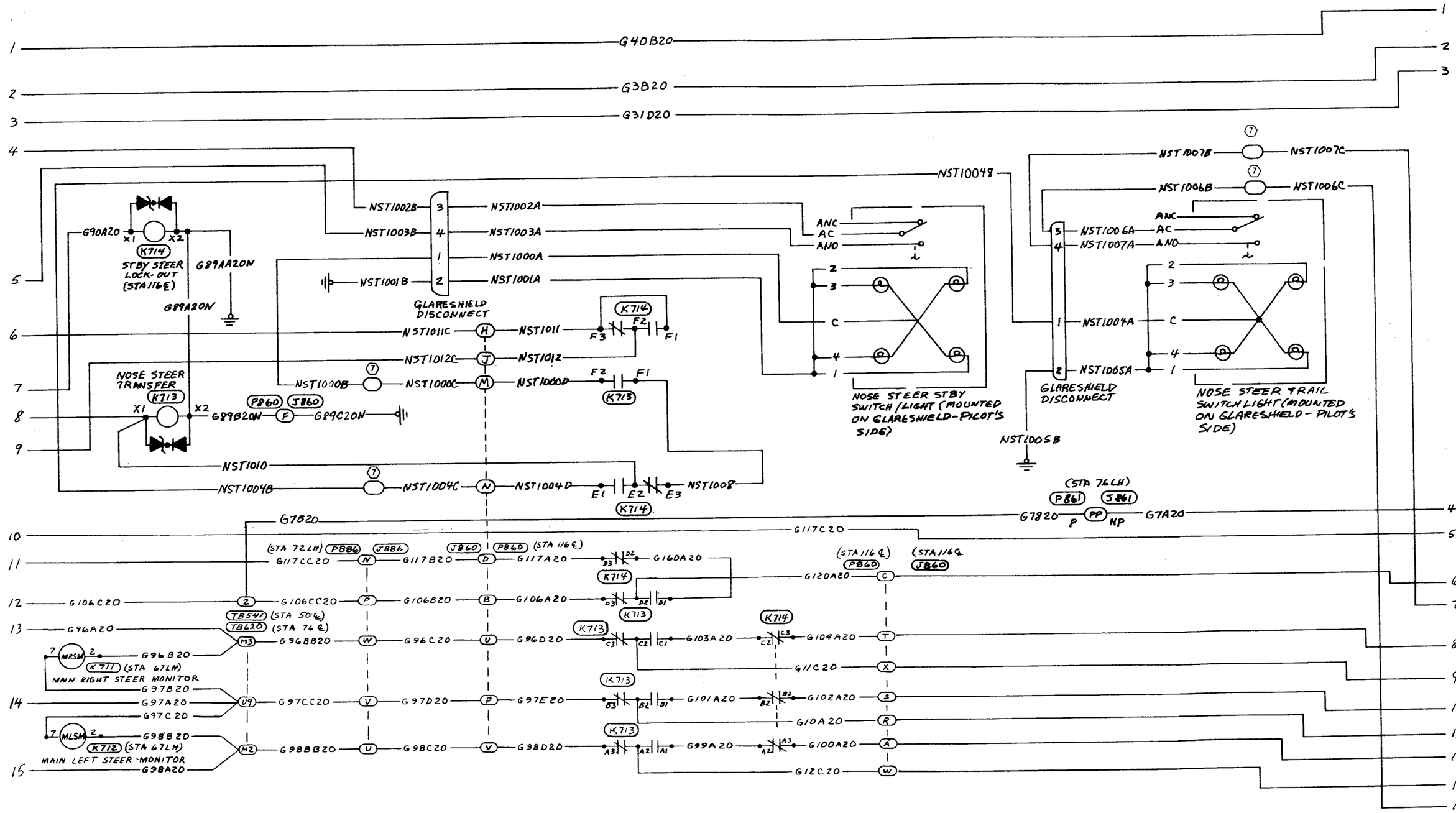

NOSE GEAR STEER SYSTEM
(S/N 380-1 Thru -27 Changed by S/B 85-2)
(Sheet 3 of 5)

NEW

32-50-1

© COPYRIGHT, 1986 BY SABRELINER CORPORATION

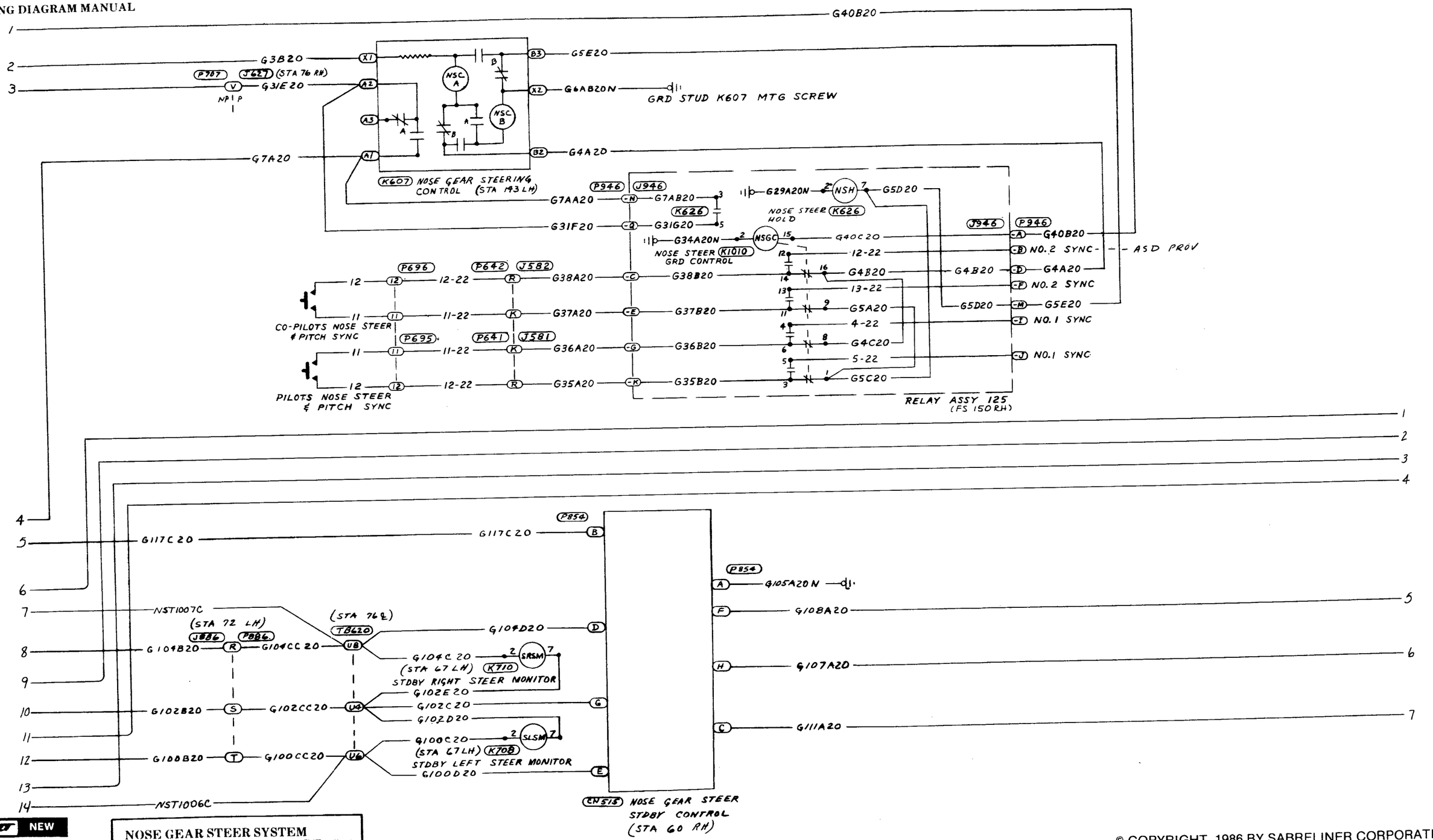

NEW

32-50-1

Page 10G Blank/10H
Jan 16/86

NOSE GEAR STEER SYSTEM
(S/N 380-1 Thru -27 Changed by S/B 85-2)
(Sheet 4 of 5)

© COPYRIGHT, 1986 BY SABRELINER CORPORATION

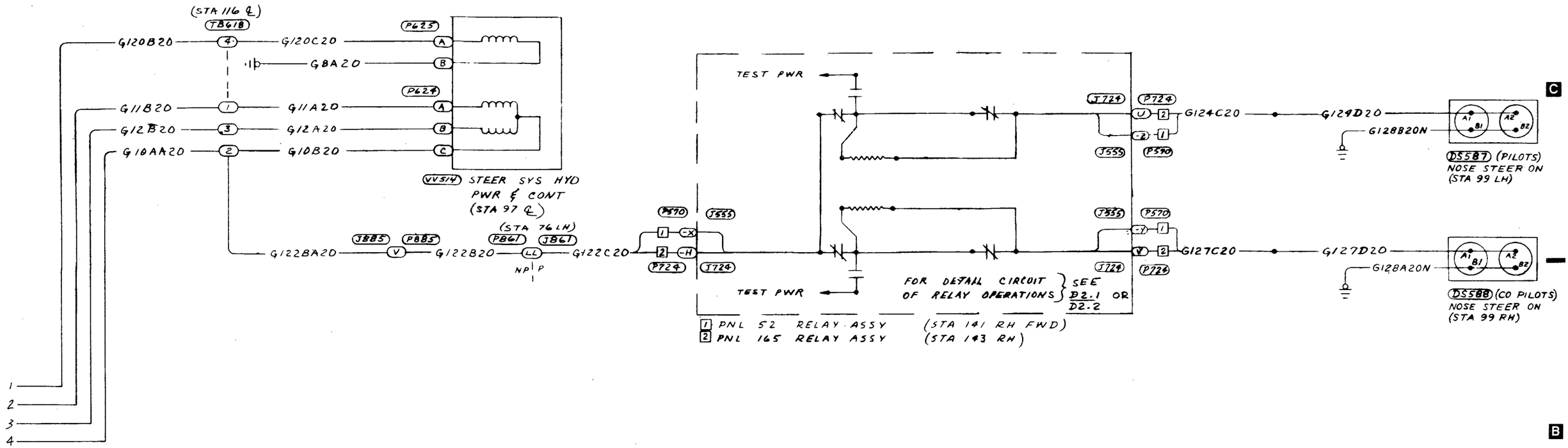

© COPYRIGHT, 1986 BY SABRELINER CORPORATION

NOSE GEAR STEER SYSTEM
(S/N 380-1 Thru -27 Changed by S/B 85-2)
(Sheet 5 of 5)

NEW

32-50-1

NOTES/LEGEND

1. FOR ACTUATION & TEST POWER SEE D2.1 CAUTION WARNING, IND & DIM & TEST SYSTEM.
2. SHOWN IN SCHEMATIC FORM FOR CIRCUITRY. SEE E2.1 LDG GR POSITION IND & WARNING SYSTEM
3. UNIDENTIFIED JUMPER
4. SW MECHANICALLY OPERATED BY NOSE GEAR ROTATION.
5. SW MECHANICALLY OPERATED BY RUDDER PEDALS.
6. FOR DETAIL GRD CIRCUIT SEE B7.1

EFFECTIVITY

[1] 380-30 & SUBS

[2] 380-61 & SUBS
AIRPLANES UNDER 369 CONTRACT

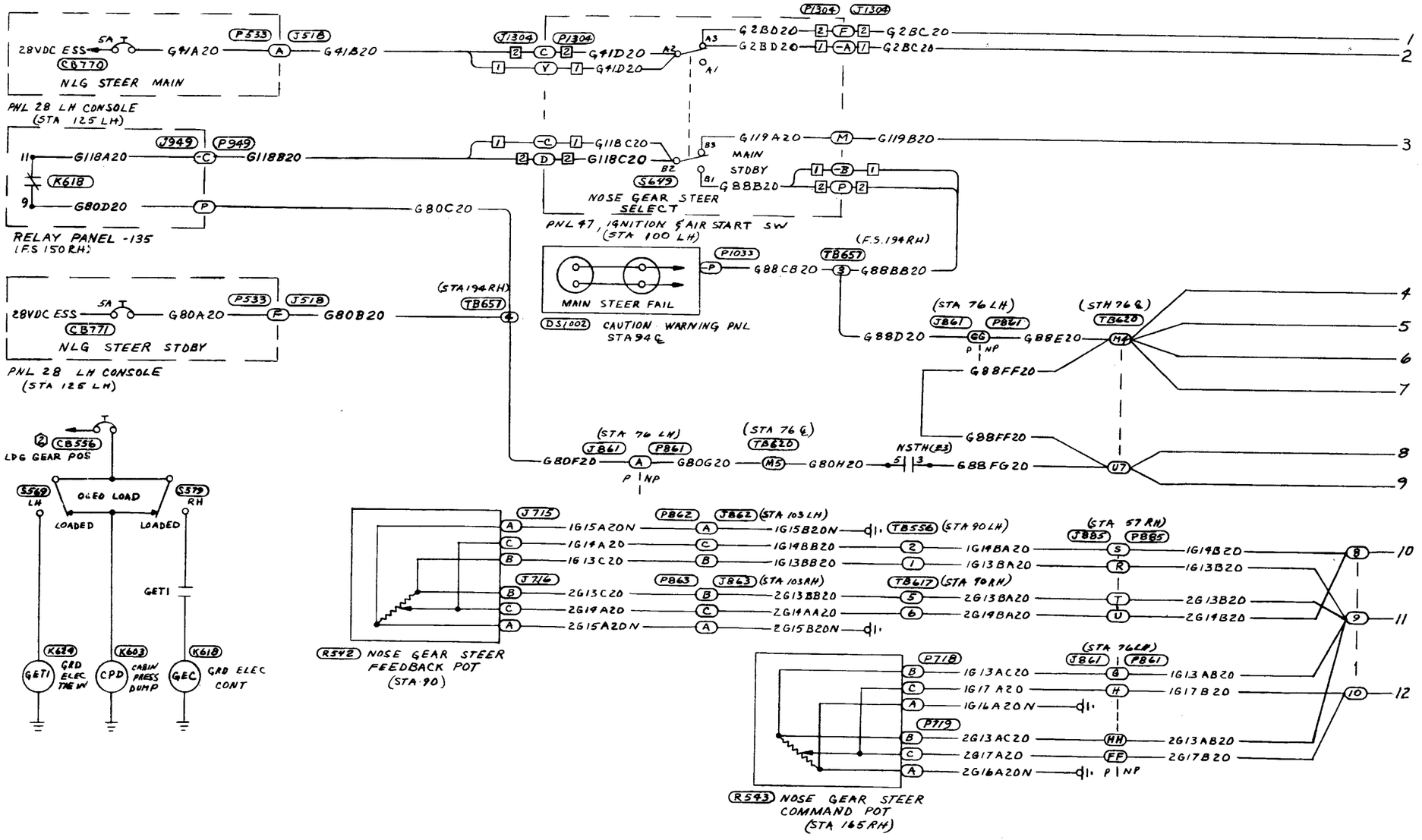

NOSE GEAR STEER SYSTEM
(380-30 & Subs)
(Sheet 1 of 5)

© COPYRIGHT, 1984 BY SABRELINER CORPORATION

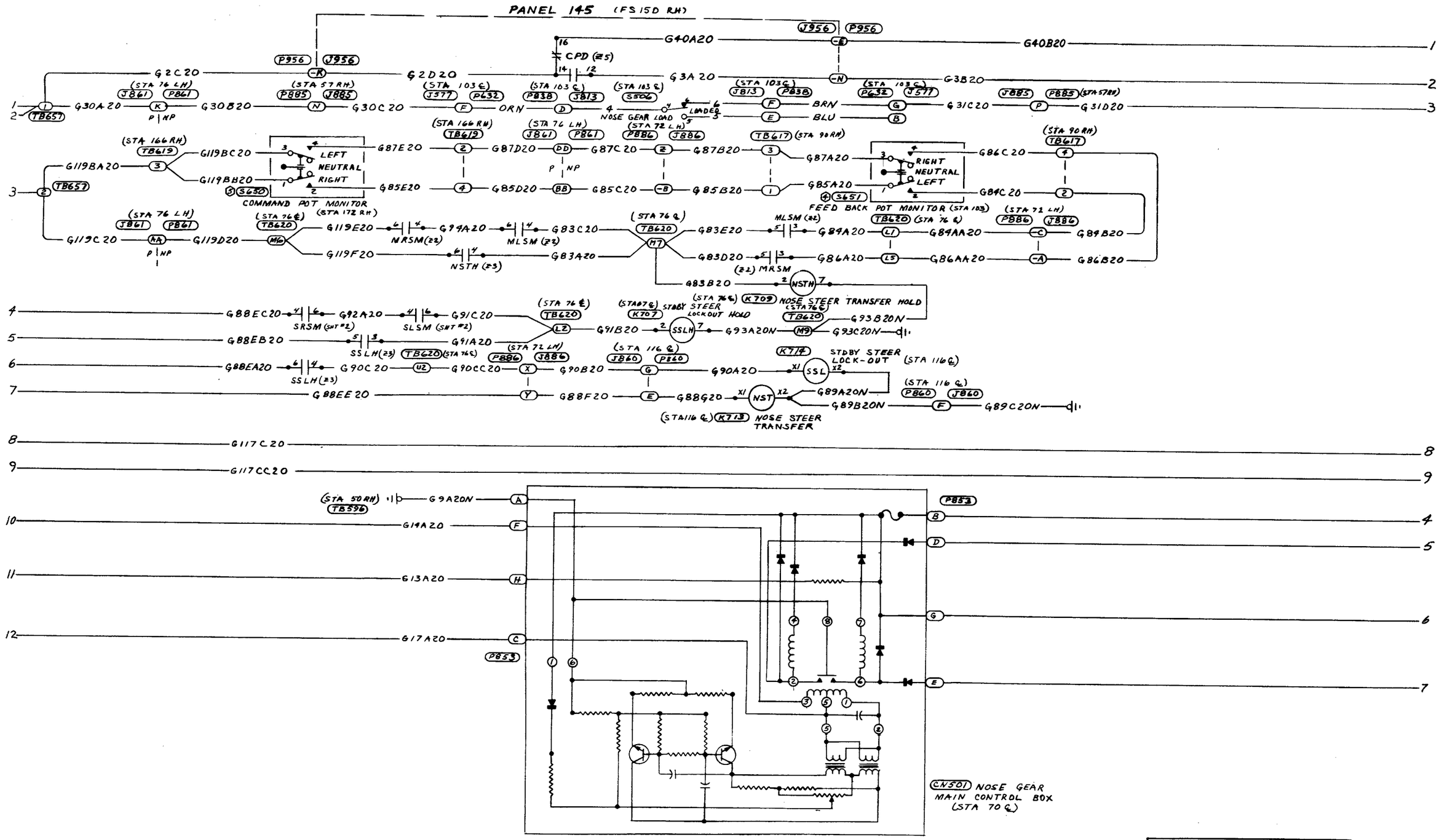

© COPYRIGHT, 1984 BY SABRELINER CORPORATION

NOSE GEAR STEER SYSTEM
(380-30 & Subs)
(Sheet 2 of 5)

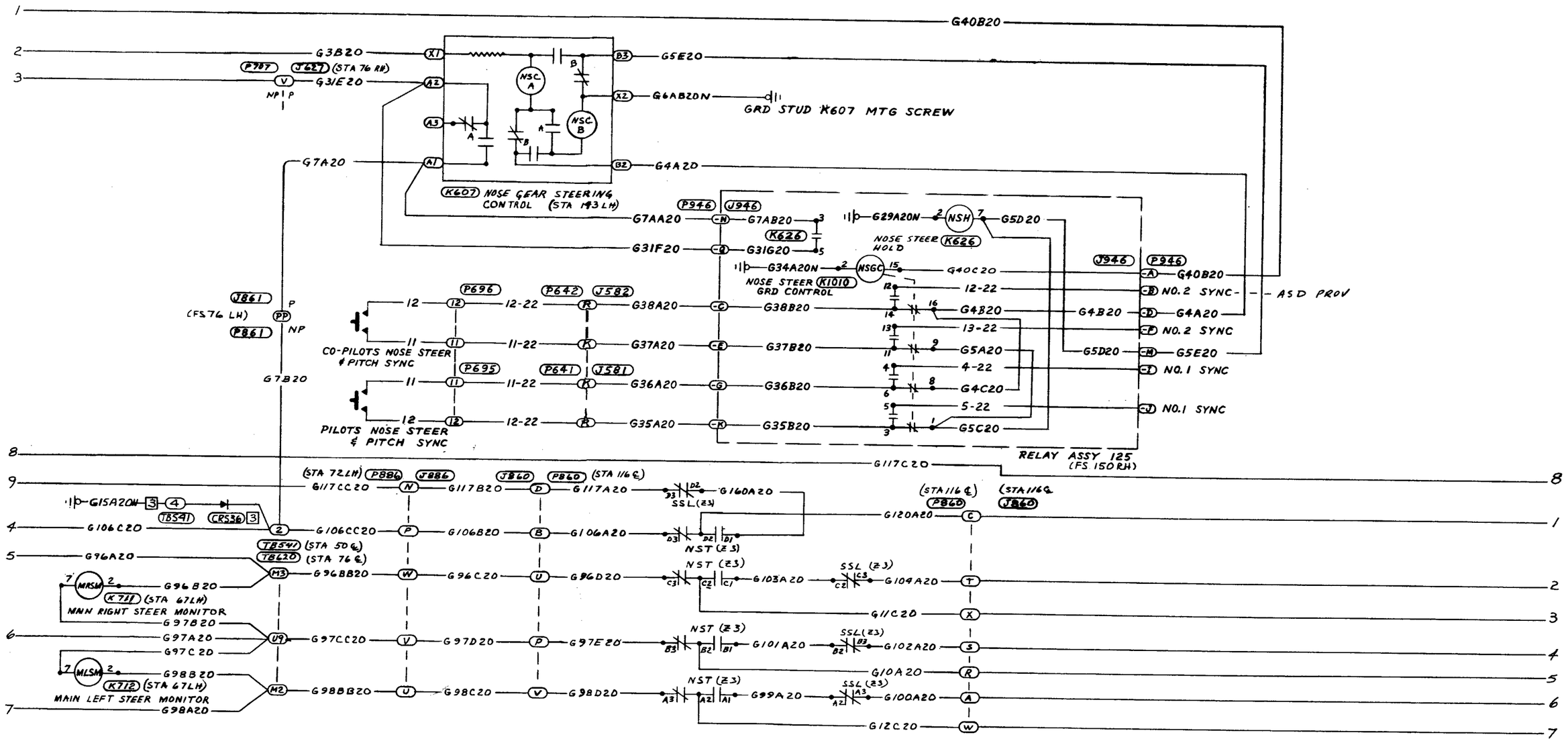

© COPYRIGHT, 1984 BY SABRELINER CORPORATION

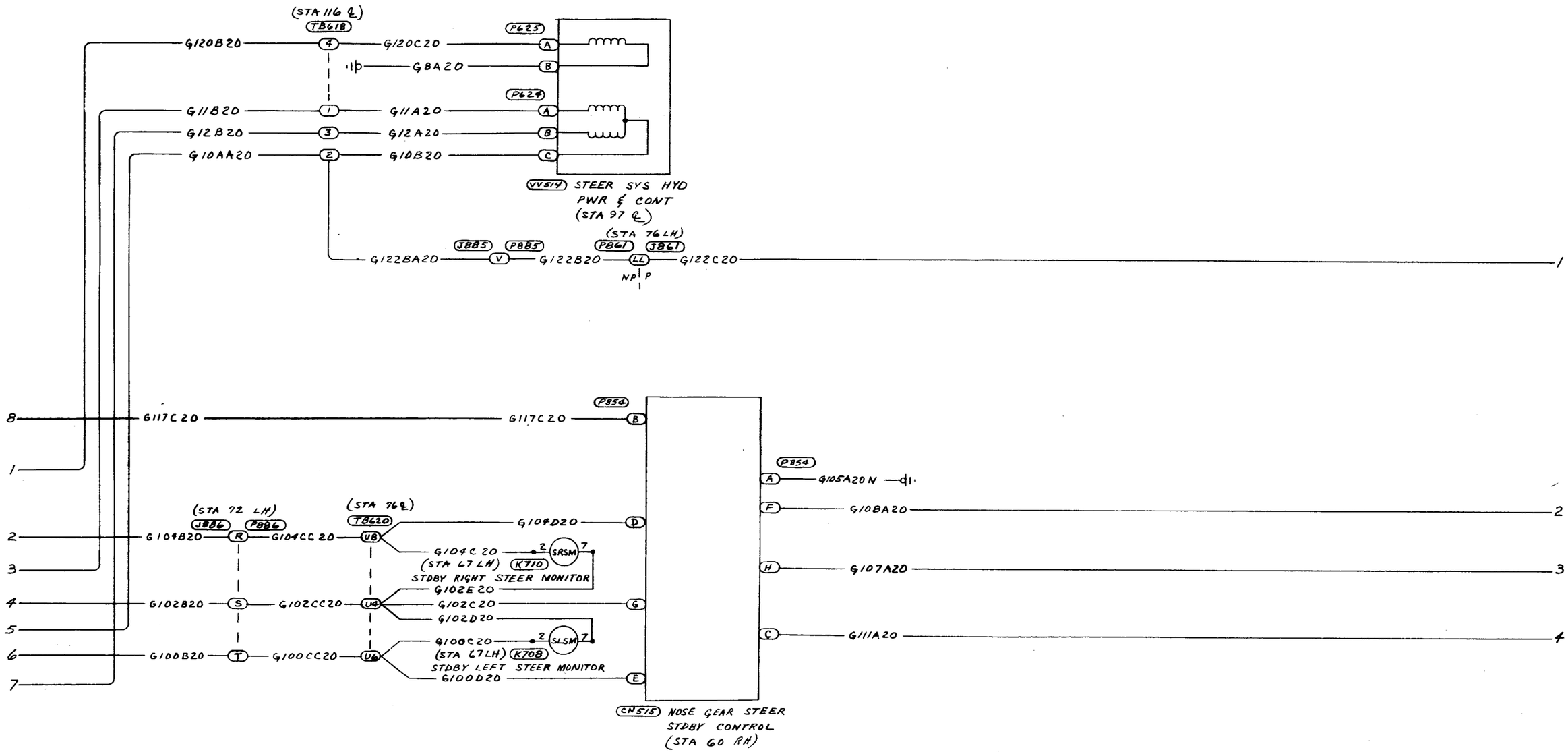

NOSE GEAR STEER SYSTEM
(380-30 & Subs)
(Sheet 4 of 5)

© COPYRIGHT, 1984 BY SABRELINER CORPORATION

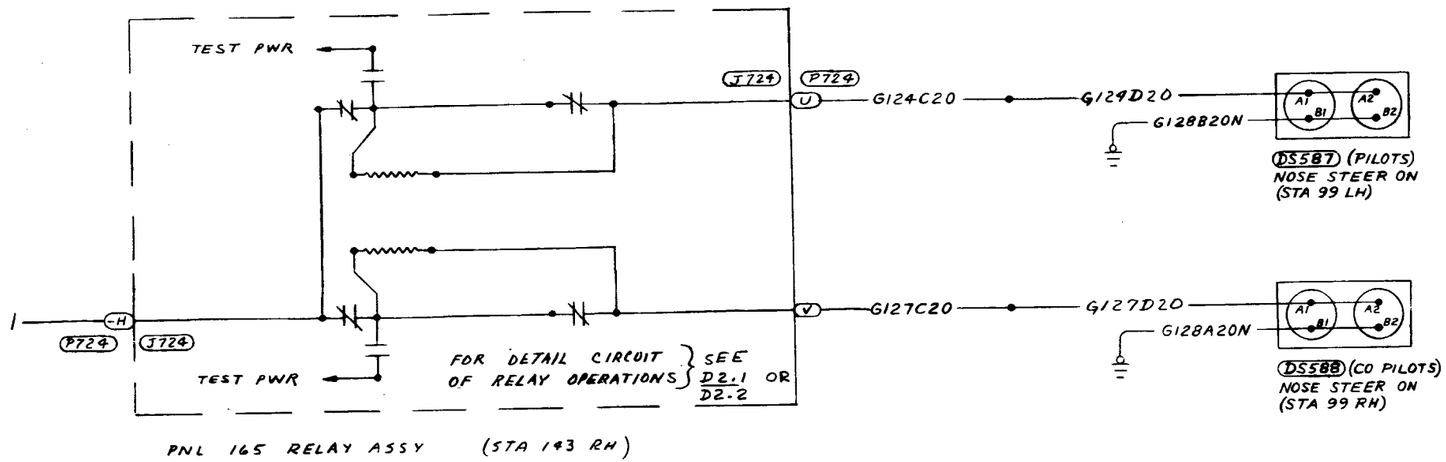

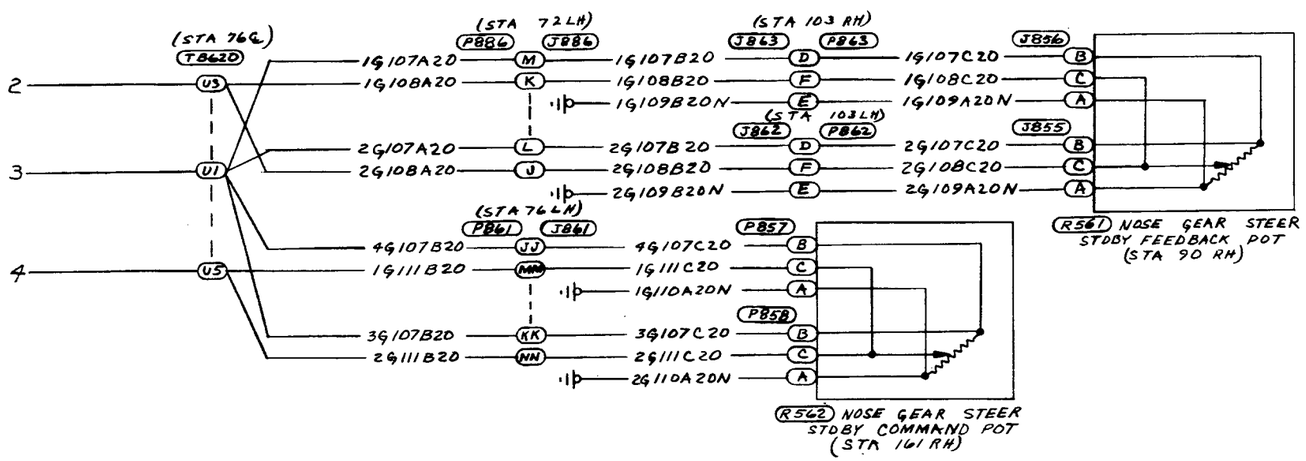

NOSE GEAR STEER SYSTEM
(380-30 & Subs)
(Sheet 5 of 5)

32-50-1
Page 19
Feb 3/84

© COPYRIGHT, 1984 BY SABRELINER CORPORATION

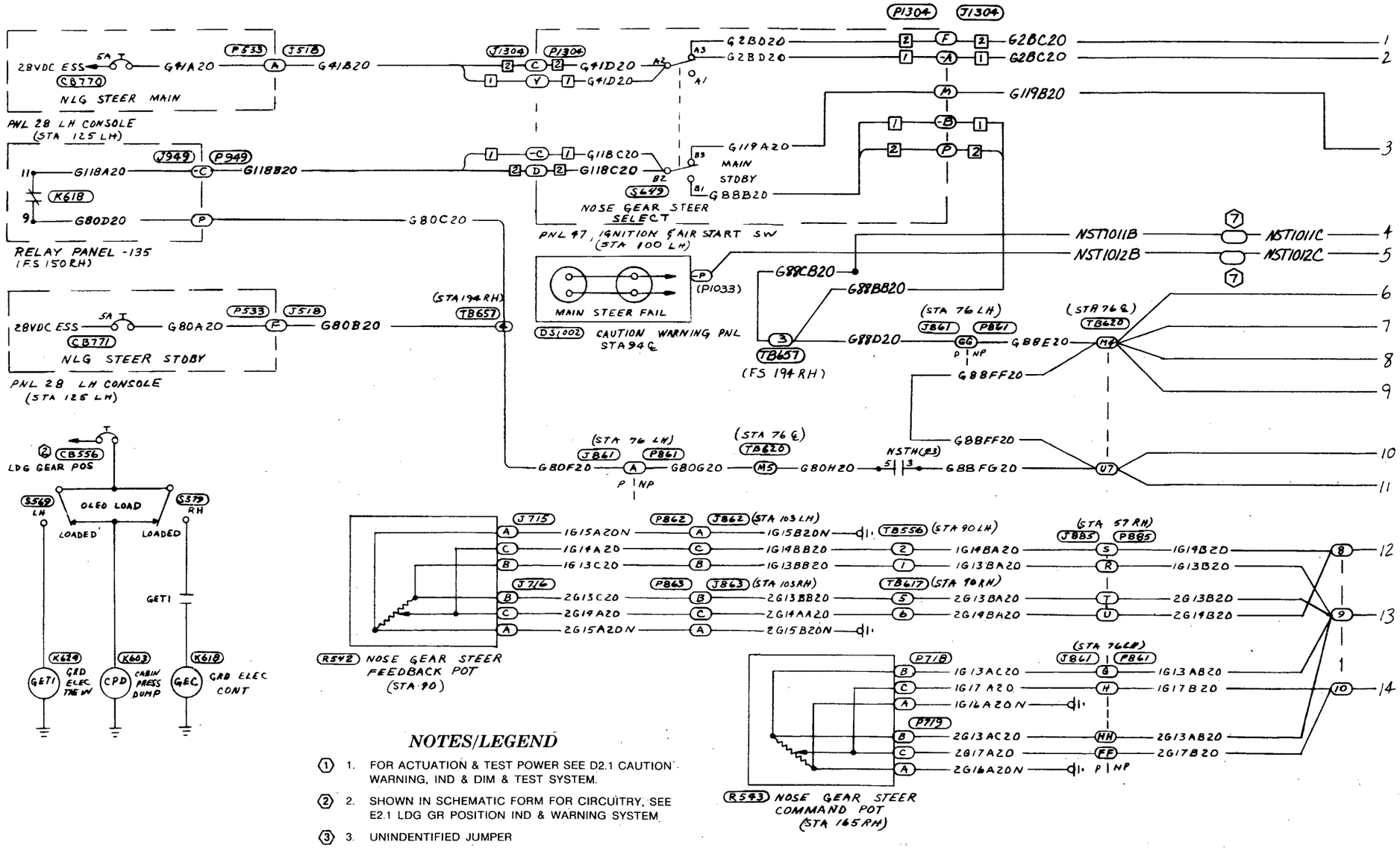

NOTES/LEGEND

1. FOR ACTUATION & TEST POWER SEE D2.1 CAUTION WARNING, IND & DIM & TEST SYSTEM.
2. SHOWN IN SCHEMATIC FORM FOR CIRCUITRY, SEE E2.1 LDG GR POSITION IND & WARNING SYSTEM.
3. UNINDENTIFIED JUMPER
4. SW MECHANICALLY OPERATED BY NOSE GEAR ROTATION.
5. SW MECHANICALLY OPERATED BY RUDDER PEDALS.
6. FOR DETAIL GRD CIRCUIT SEE B7.1
7. REFER TO S/B 85-2 TO IDENTIFY FS 76 BULKHEAD FEED-THROUGH CONNECTOR PINS USED DURING INSTALLATION OF NOSE WHEEL STEERING TEST SYSTEM.

EFFECTIVITY

1. S/N 380-30 & SUBS
2. S/N 380-61 & SUBS AND AIRPLANES UNDER 369 CONTRACT (FAA OWNED)

NEW

NOSE GEAR STEER SYSTEM
(S/N 380-30 & Subs Changed by S/B 85-2)
(Sheet 1 of 5)

© COPYRIGHT, 1986 BY SABRELINER CORPORATION

SEE BLOW-UP FICHE NO. ASE540 - ITEM K

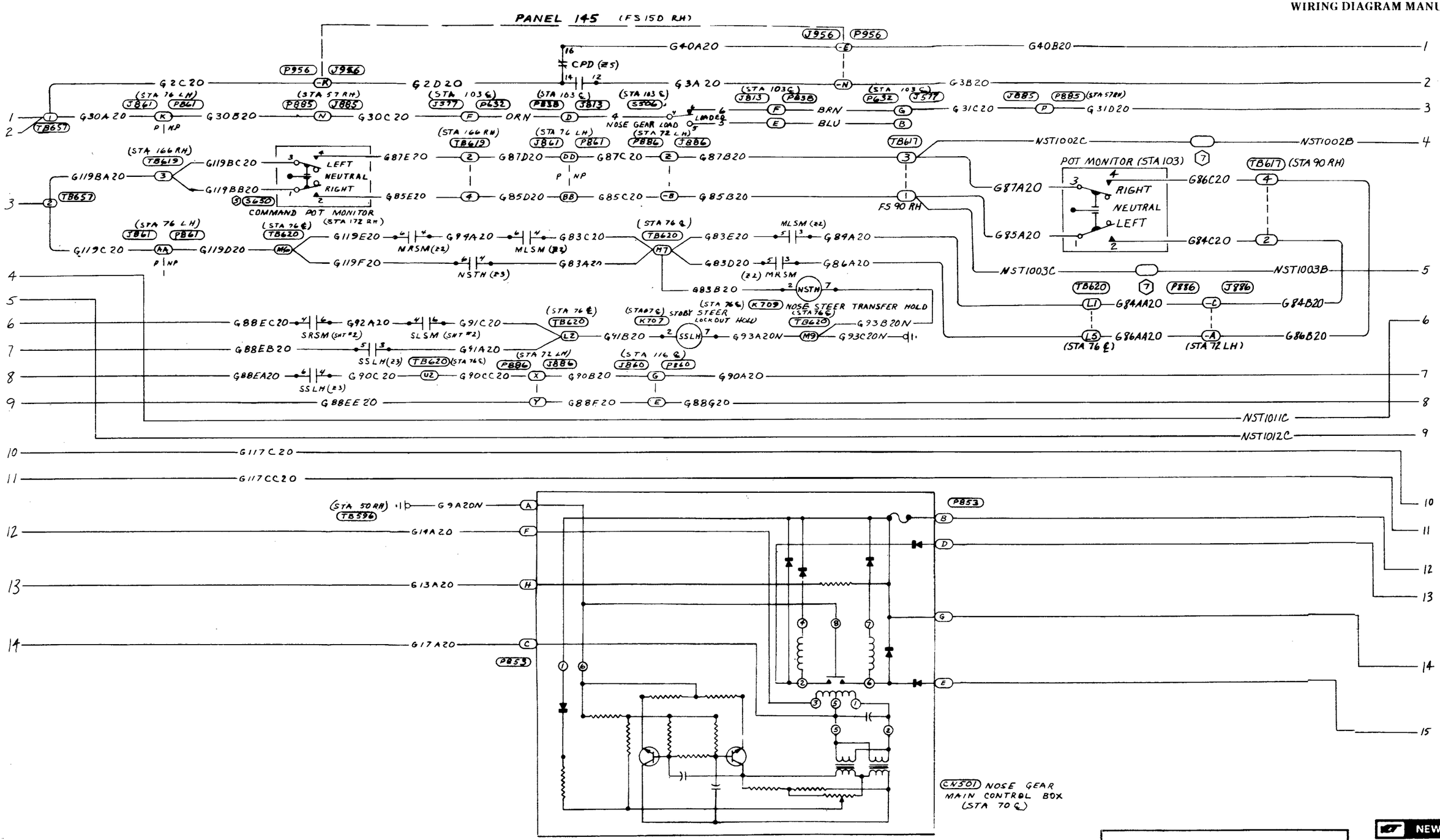

© COPYRIGHT, 1986 BY SABRELINER CORPORATION

NOSE GEAR STEER SYSTEM
(S/N 380-30 & Subs Changed by S/B 85-2)
(Sheet 2 of 5)

NEW

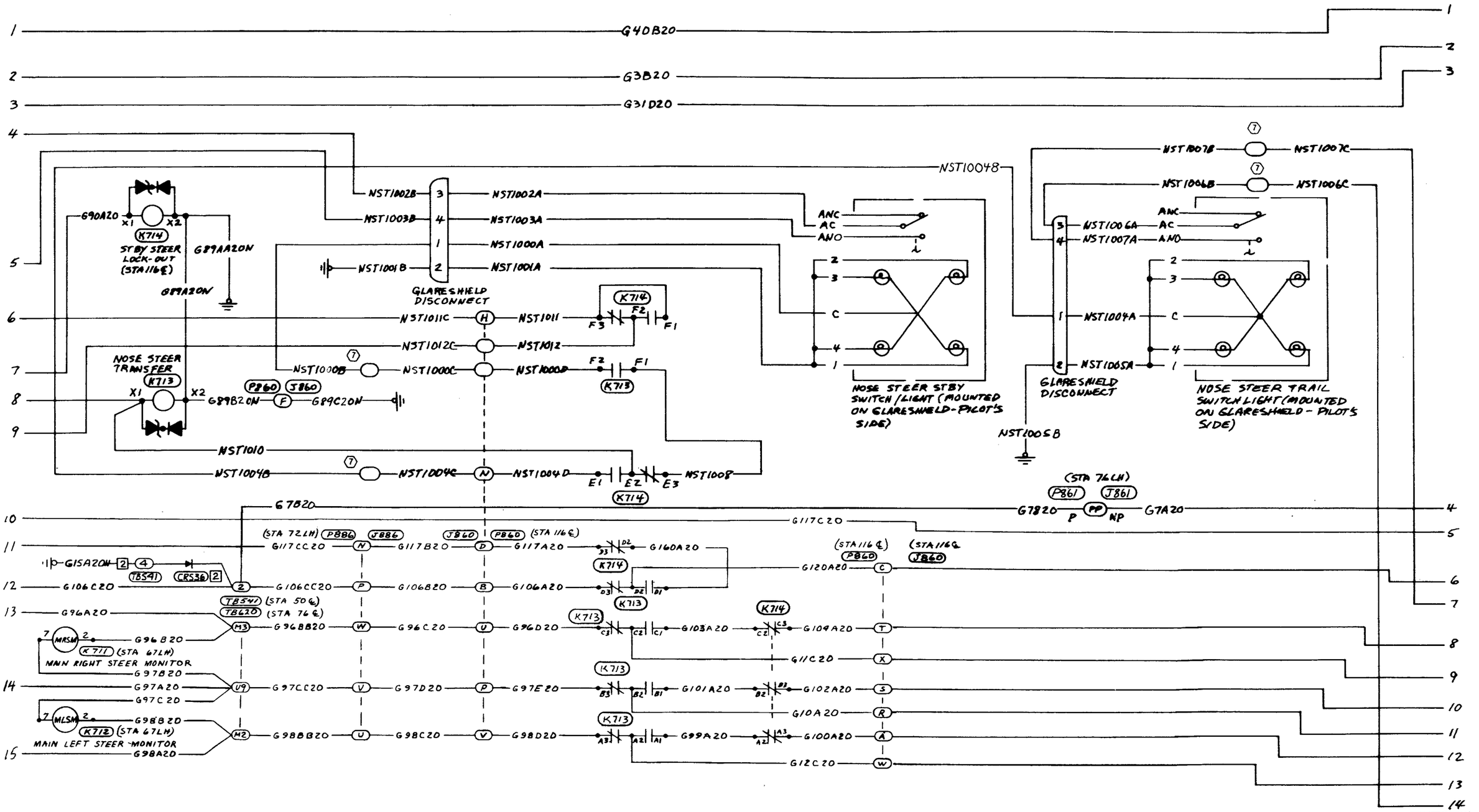

© COPYRIGHT, 1986 BY SABRELINER CORPORATION

NOSE GEAR STEER SYSTEM
(S/N 380-30 & Subs Changed by S/B 85-2)
(Sheet 3 of 5)

NEW
32-50-1

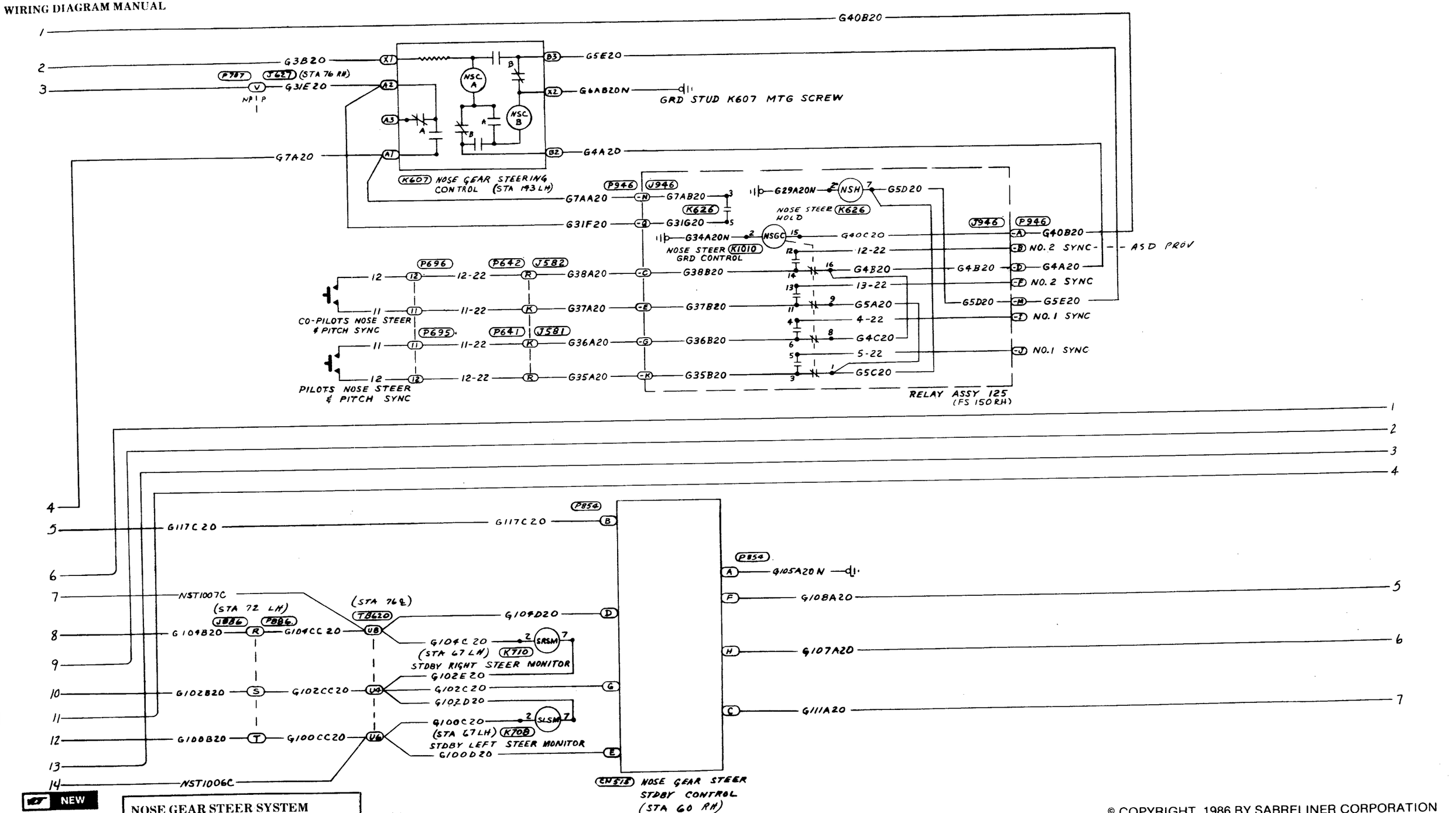

NEW

32-50-1

Page 27 Blank/28
Jan 16/86

NOSE GEAR STEER SYSTEM
(S/N 380-30 & Subs Changed by S/B 85-2)
(Sheet 4 of 5)

© COPYRIGHT, 1986 BY SABRELINER CORPORATION

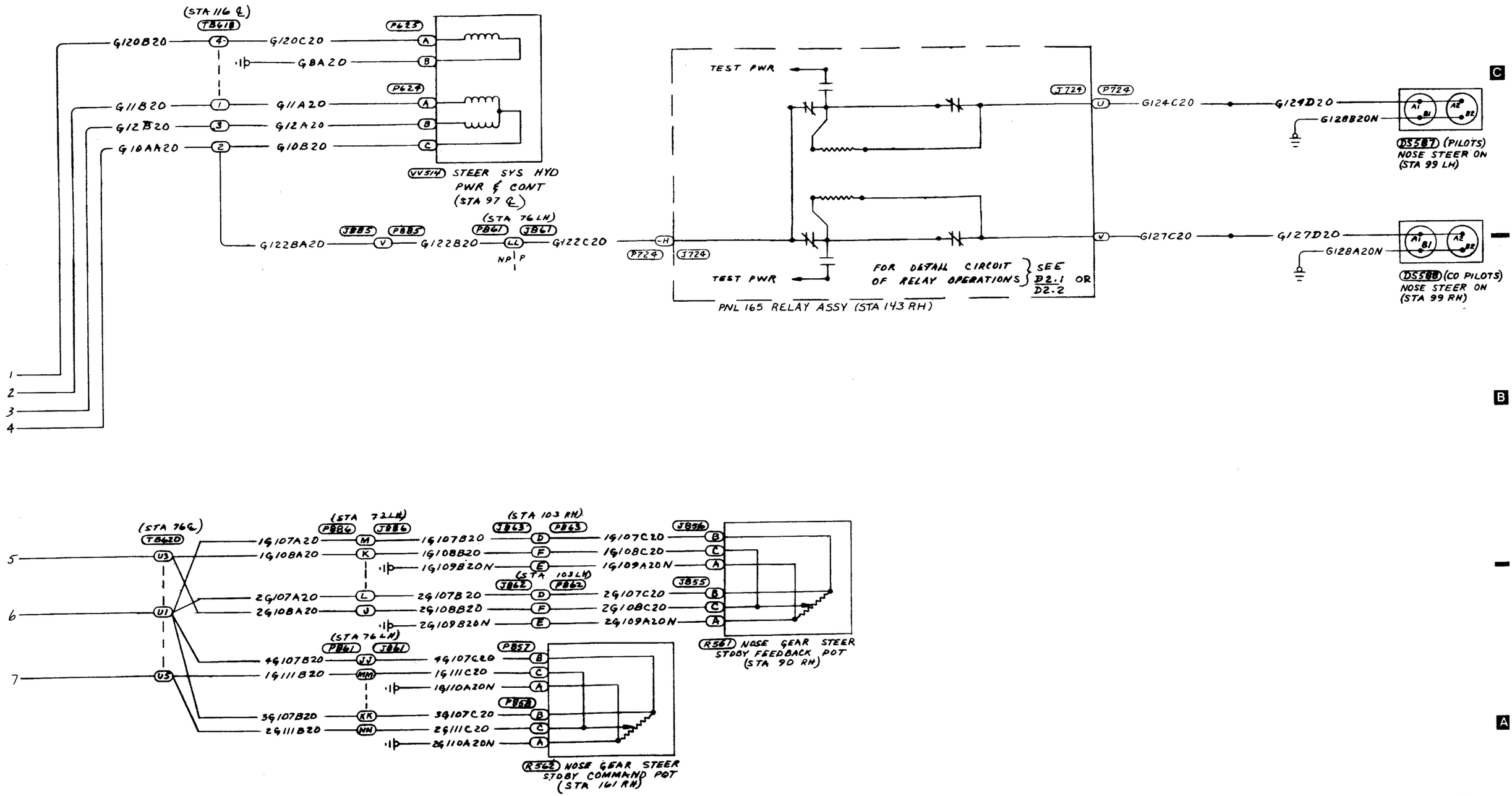

© COPYRIGHT, 1986 BY SABRELINER CORPORATION

NOSE GEAR STEER SYSTEM
(S/N 380-30 & Subs Changed by S/B 85-2)
(Sheet 5 of 5)

NEW

NOTES/LEGEND

1. D2.1 FOR OPERATION, SEE CAUTION WARNING AND INDICATOR LIGHT DIM AND TEST SYSTEMS.
2. B7.1 FOR DETAIL GROUND CIRCUIT SEE: ELEC GND SYS
3. D17.1 FOR DETAIL GRD CIRCUIT
4. K3.1-1 ENG THRUST REVERSER CONTROL SYSTEM
5. K3.1-3 THRUST REVERSER INDICATING SYSTEM
6. R1.1-1 AUDIO SYS PROVISIONS
7. L1.1-2 FLT CONT TRIM SYS

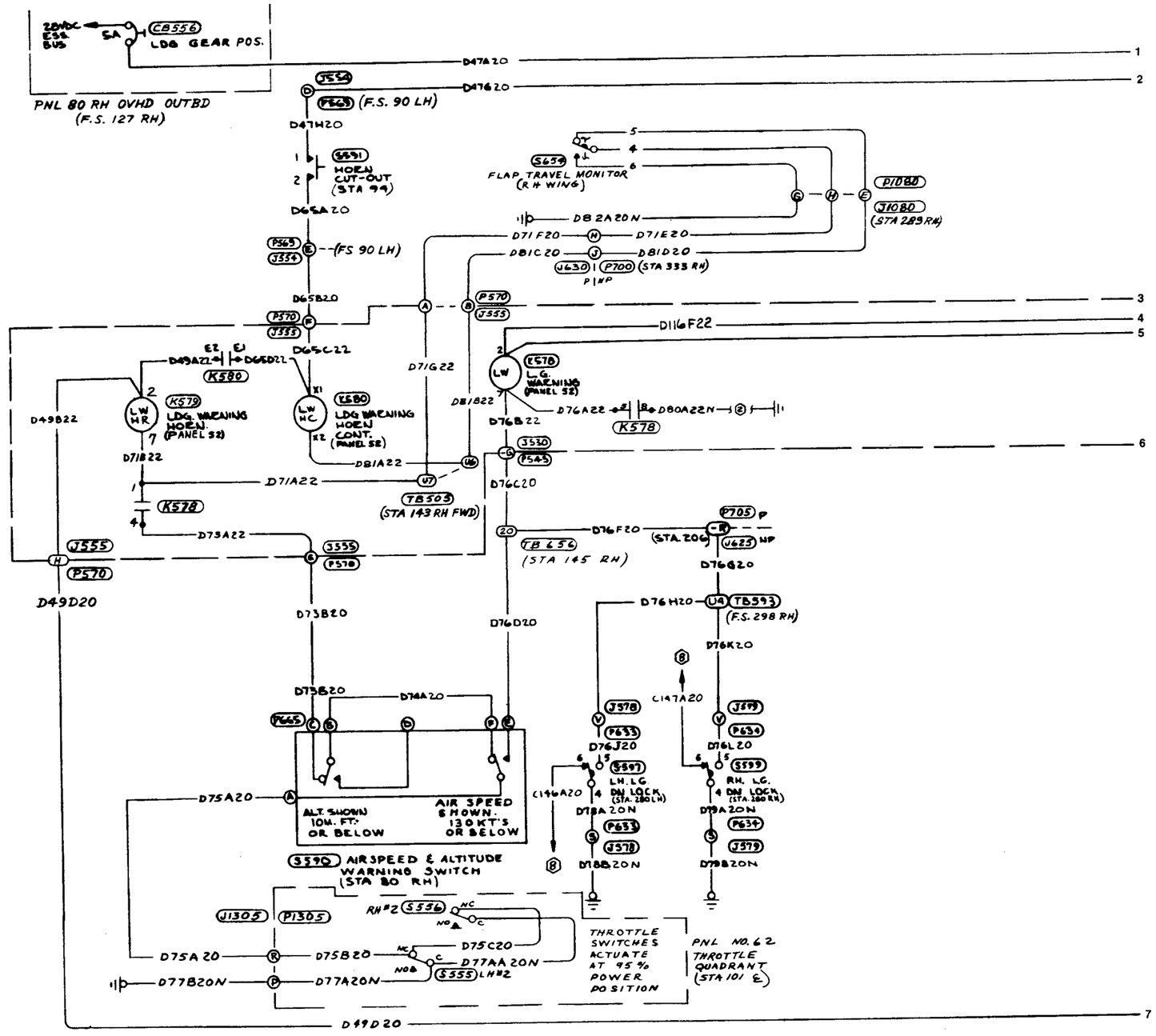

LANDING GEAR POSITION INDICATING AND WARNING SYSTEM
(380-1 Thru -4, -6 Thru -9, & -11)
(Sheet 1 of 3)

© COPYRIGHT. 1984 BY SABRELINER CORPORATION

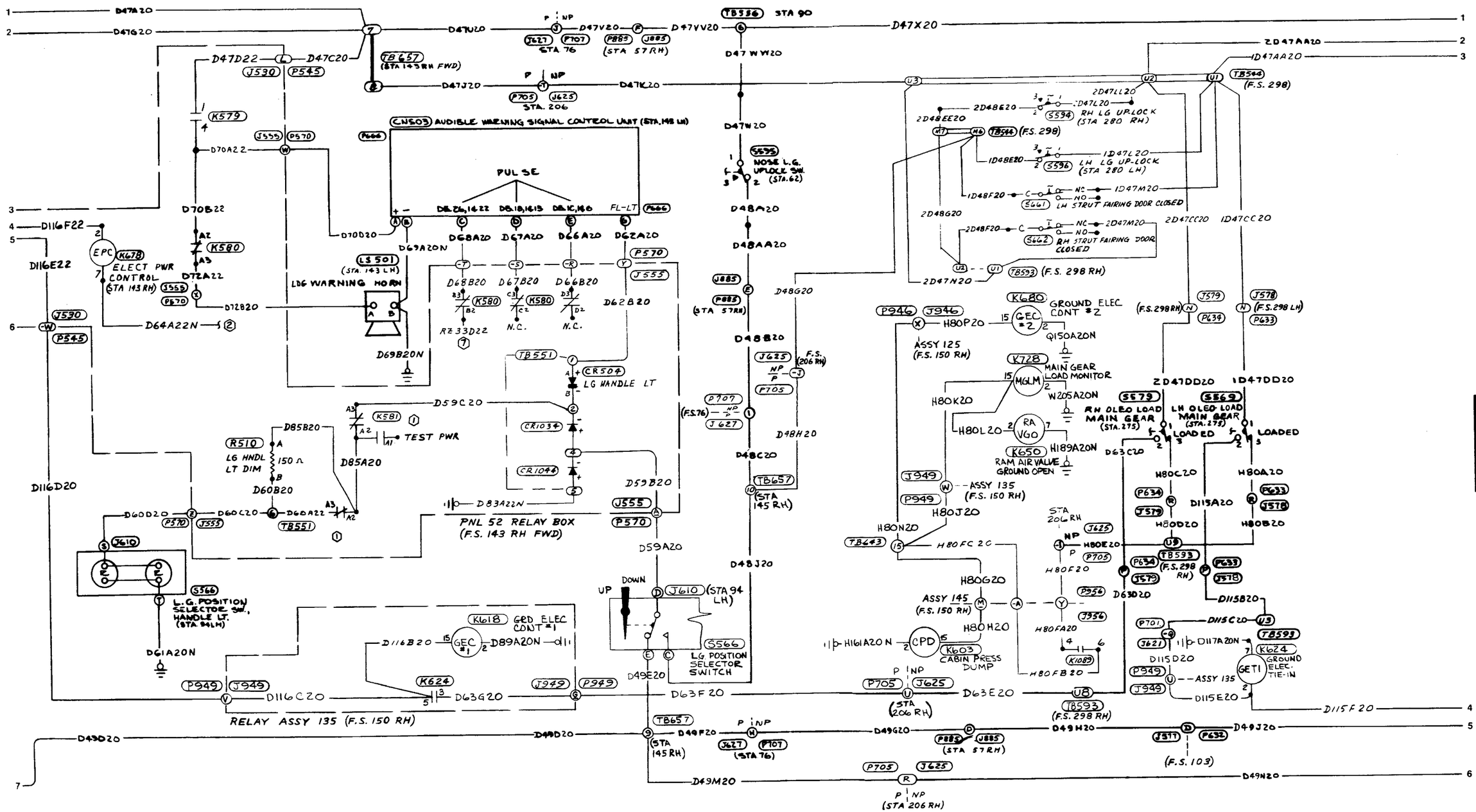

LANDING GEAR POSITION INDICATING AND WARNING SYSTEM
(380-1 Thru -4, -6 Thru -9, & -11)
(Sheet 2 of 3)

© COPYRIGHT, 1984 BY SABRELINER CORPORATION

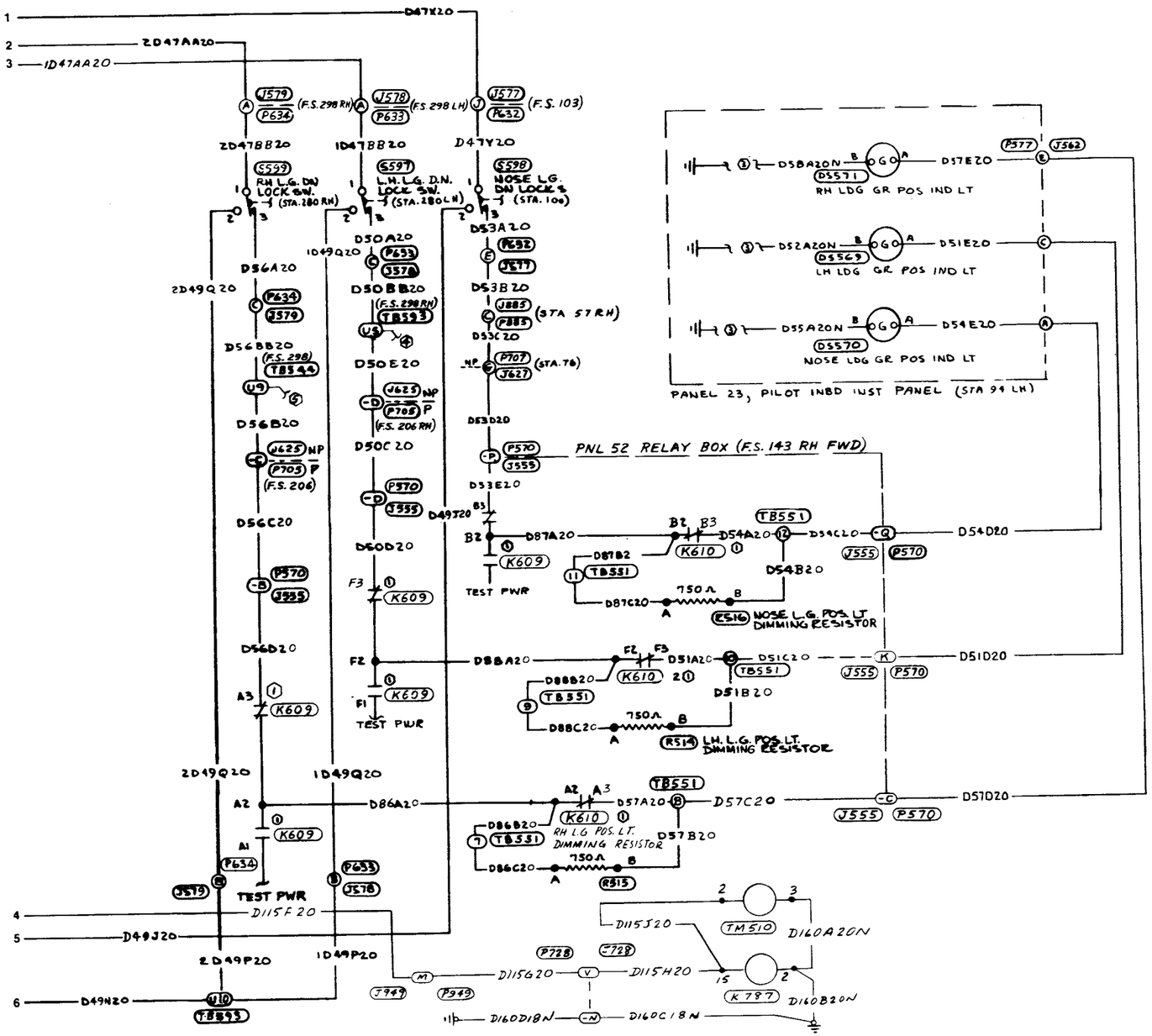

LANDING GEAR POSITION INDICATING AND WARNING SYSTEM
(380-1 thru -4, -6 thru -9, and 11)
(Sheet 3 of 3)

© COPYRIGHT, 1984 BY SABRELINER CORPORATION

NOTES/LEGEND

1. D2.2 FOR OPERATION, SEE CAUTION WARN & INDICATOR LIGHT DIM AND TEST SYSTEMS.
2. B7.2 FOR DETAIL GRD CIRCUIT SEE ELEC GRD SYS.
3. D17.1 FOR DETAIL GRD CIRCUIT.
4. K3.1-3 THRUST REVERSER CONTROL SYS.
5. K3.1-3 THRUST REVERSER IND SYSTEM.
6. R1.1-1 AUDIO SYS PROV
7. L1.1-2 FLT CONT TRIM SYS.
8. E4.2 MODULATING ANTI-SKID CONT SYS.
9. L7.1 STALL WARN SYS SHT #1 (RH)

EFFECTIVITY

1. All airplanes except those under 369 contract
2. All airplanes under 369 contract
3. 380-5, -10, -12, -42 airplanes not changed by S/B 75-11
4. 380-43 & subs airplanes changed by S/B 75-11
5. Airplanes changed by S/B 74-9
6. 330-5, -10, -12 thru -69, -71 & -72
7. 380-70

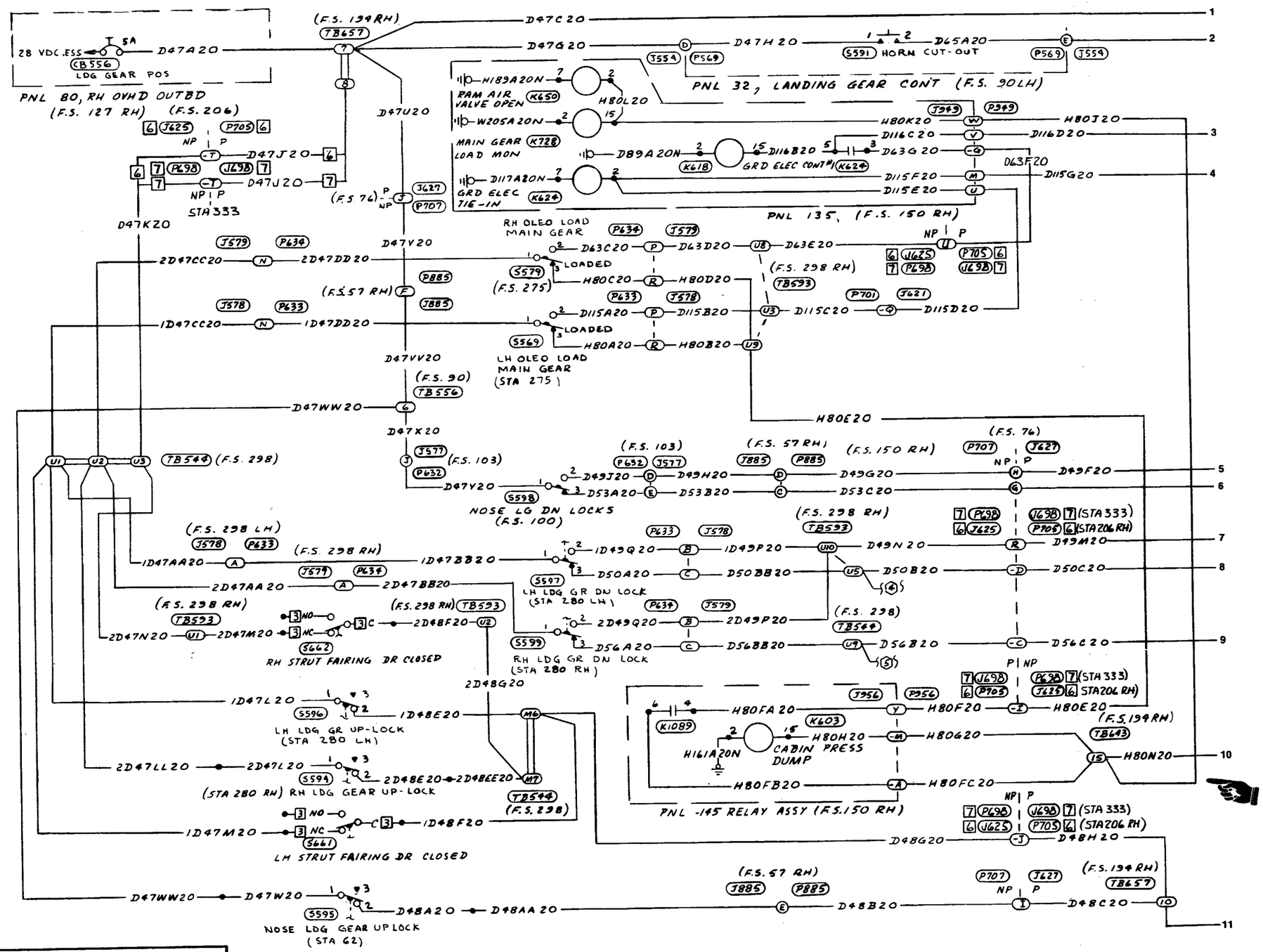

LANDING GEAR POSITION INDICATING AND WARNING SYSTEM
S/N 380-5 Thru -10, -12 & Subs
(Sheet 1 of 3)

© COPYRIGHT, 1987 BY SABRELINER CORPORATION

E2.2	12	11	10	9

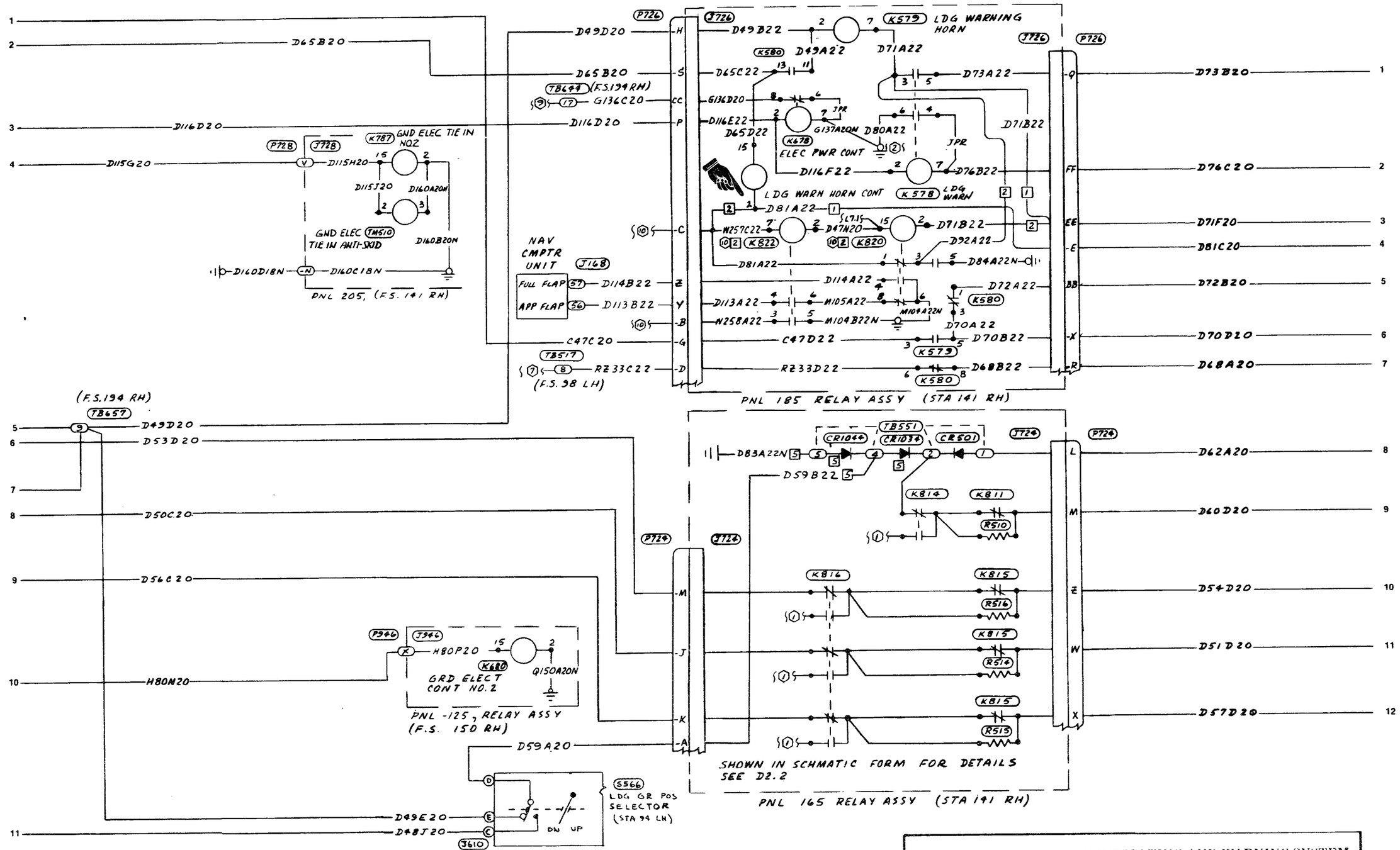

LANDING GEAR POSITION INDICATING AND WARNING SYSTEM
S/N 380-5 Thru -10, -12 & Subs
(Sheet 2 of 3)

© COPYRIGHT, 1987 BY SABRELINER CORPORATION

8 | 7 | 6 | 5 | E2.2

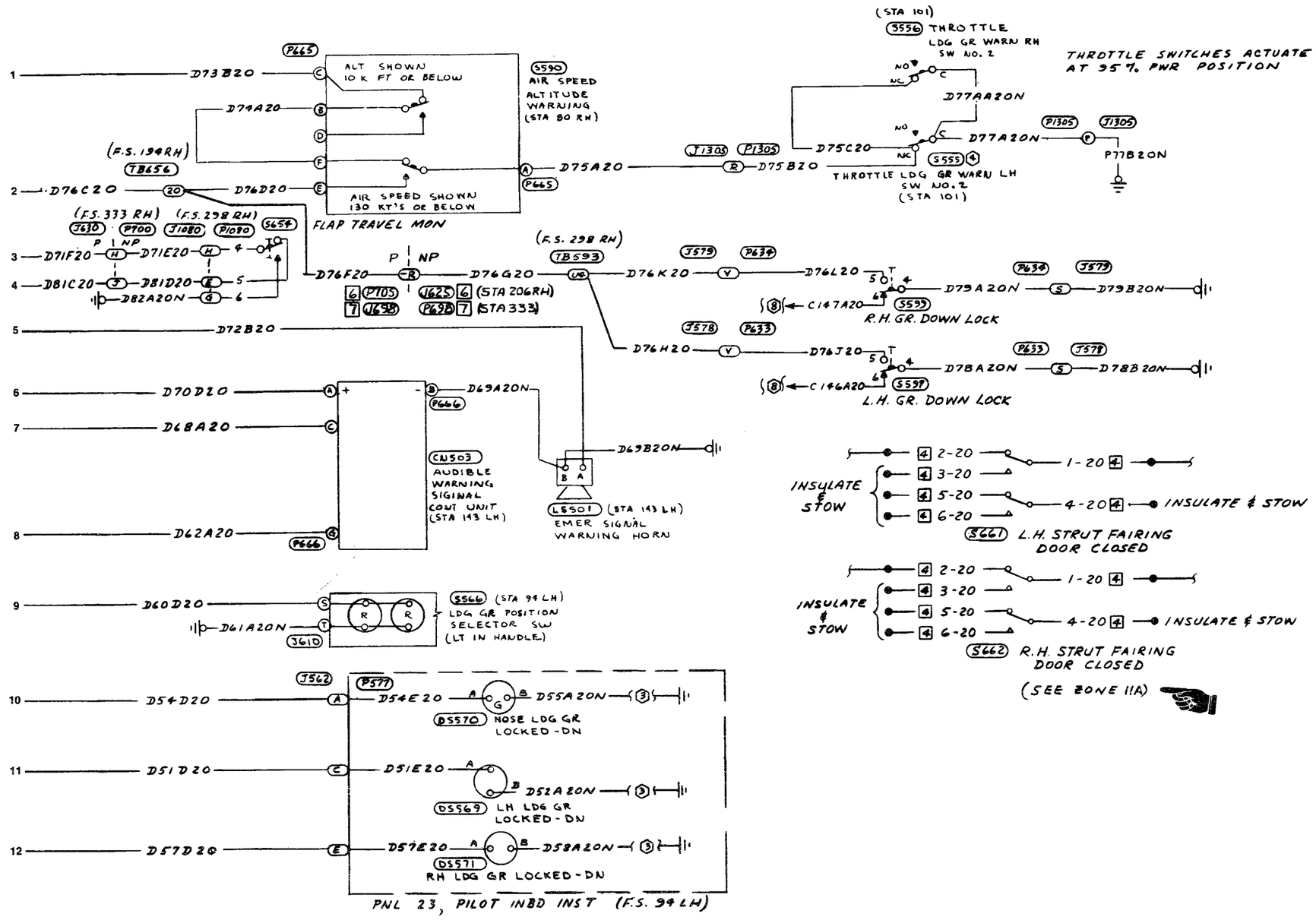

© COPYRIGHT, 1987 BY SABRELINER CORPORATION

LANDING GEAR POSITION INDICATING AND WARNING SYSTEM
S/N 380-5 Thru -10, -12 & Subs
(Sheet 3 of 3)

CHAPTER 33

LIGHTS

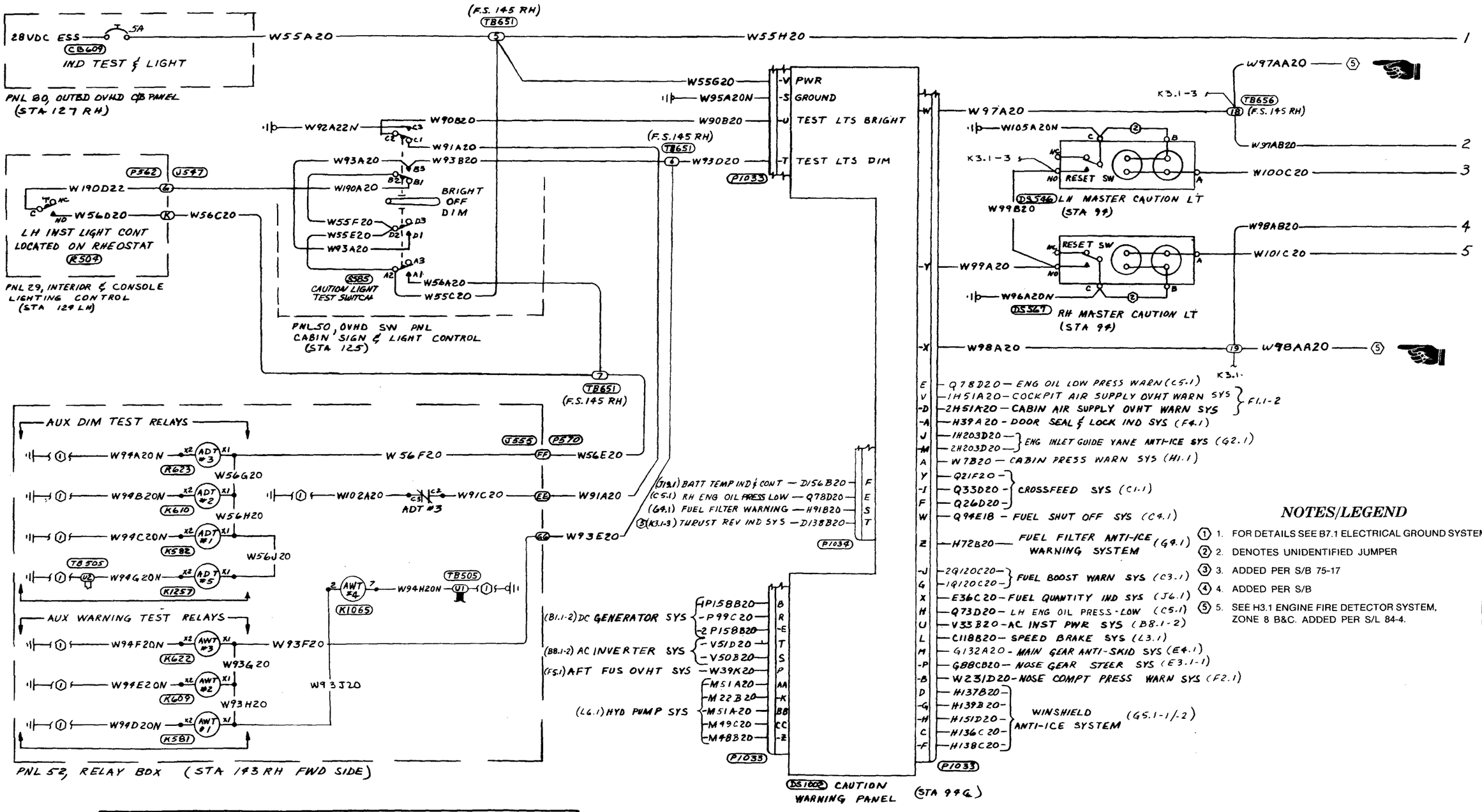

NOTES/LEGEND

1. FOR DETAILS SEE B7.1 ELECTRICAL GROUND SYSTEM
2. DENOTES UNIDENTIFIED JUMPER
3. ADDED PER S/B 75-17
4. ADDED PER S/B
5. SEE H3.1 ENGINE FIRE DETECTOR SYSTEM, ZONE 8 B&C. ADDED PER S/L 84-4.

CAUTION WARNING AND INDICATOR LIGHTS DIM & TEST SYSTEM
(S/N 380-1 Thru -4, -6 Thru -9, & -11)
(Sheet 1 of 2)

© COPYRIGHT, 1986 BY SABRELINER CORPORATION

D2.1	6	5	4

ORIGINAL AS
RECEIVED BY ATP

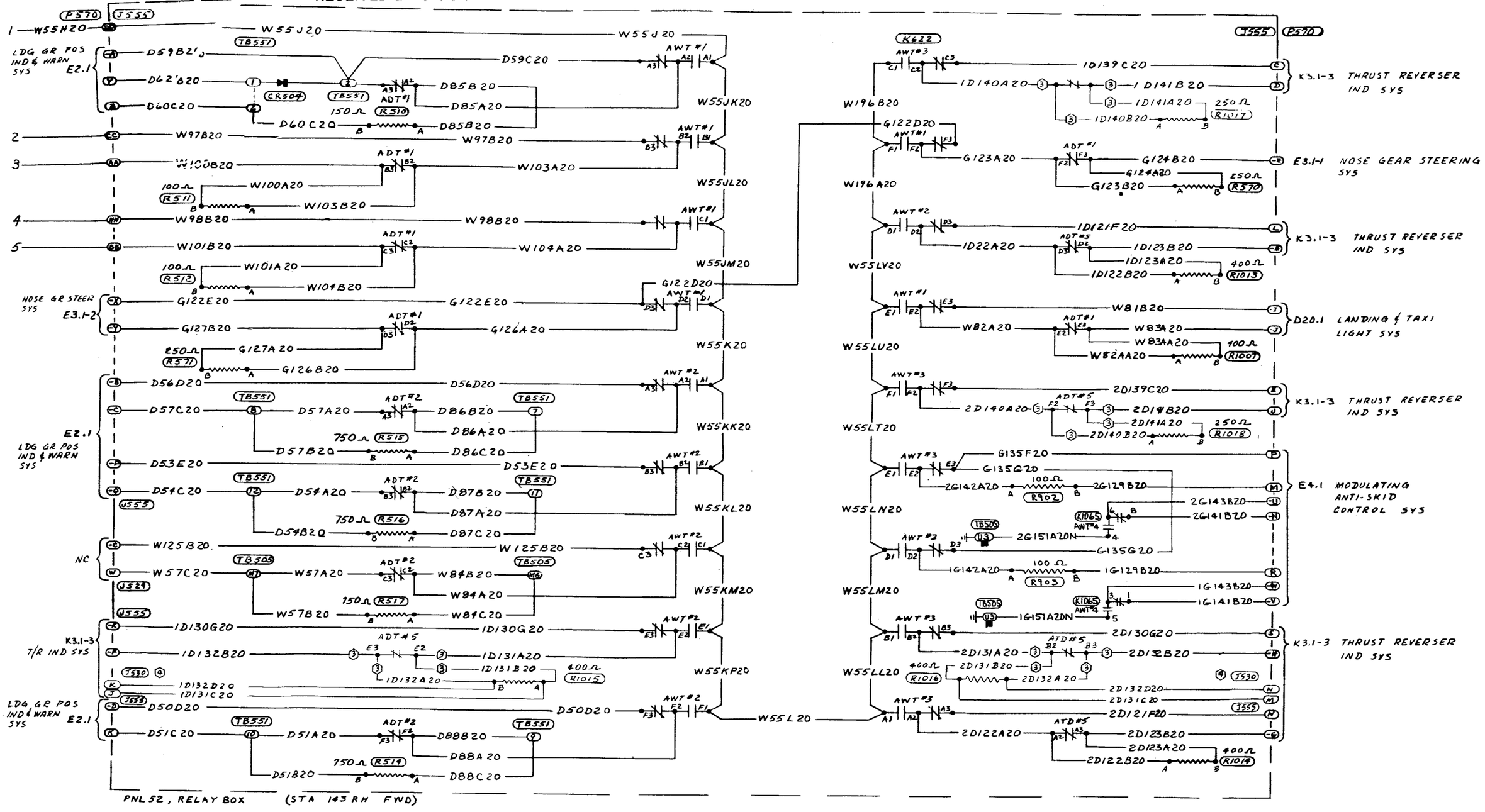

© COPYRIGHT, 1986 BY SABRELINER CORPORATION

CAUTION WARNING AND INDICATOR LIGHTS DIM & TEST SYSTEM
(S/N 380-1 Thru -4, -6 Thru -9 & -11)
(Sheet 2 of 2)

4	3	2	D2.1

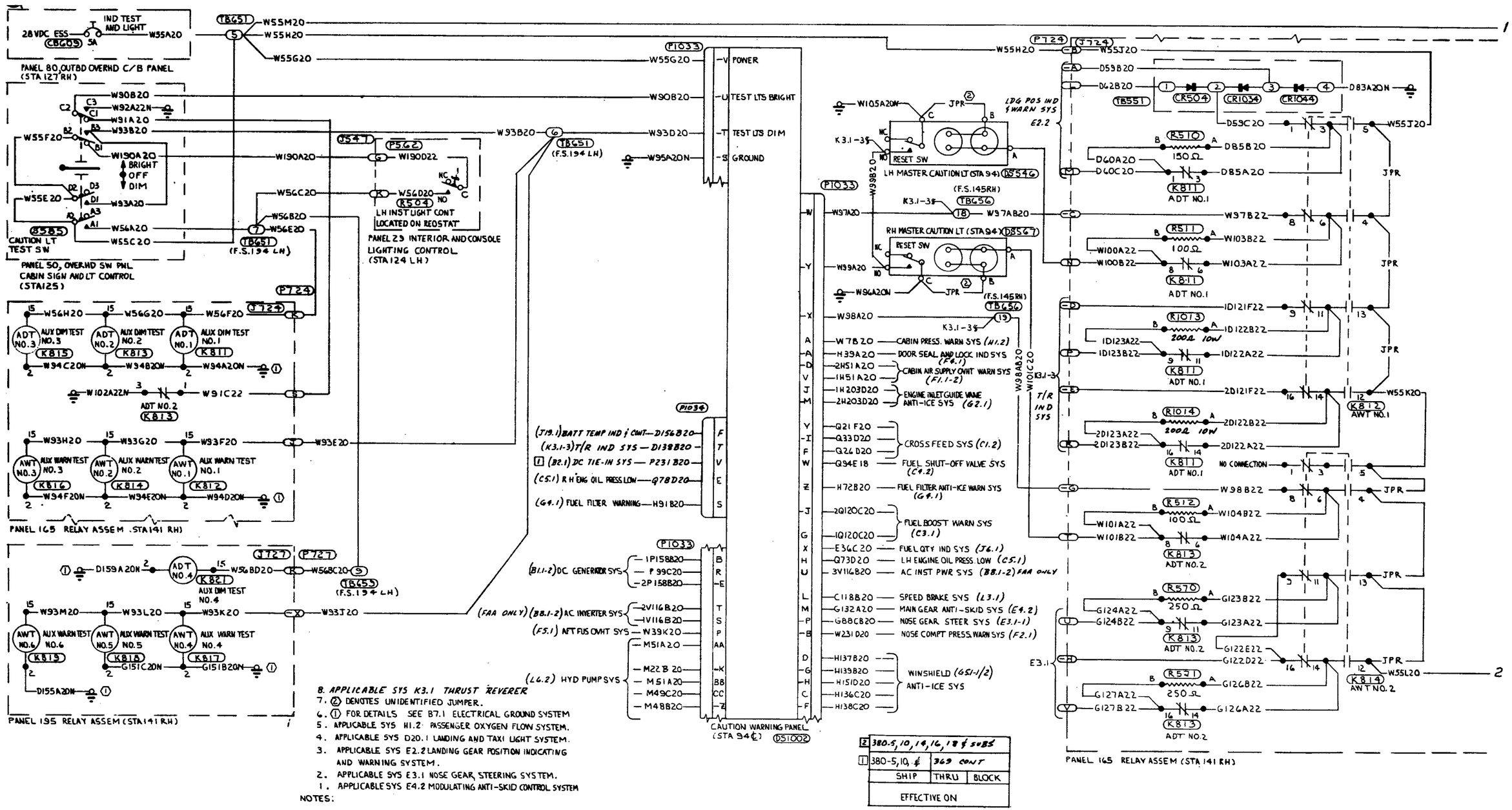

CAUTION WARNING AND INDICATOR LIGHTS DIM AND TEST SYSTEM
(380-5, -10, -12, & Subs)
(Sheet 1 of 2)

© COPYRIGHT, 1981 BY ROCKWELL INTERNATIONAL

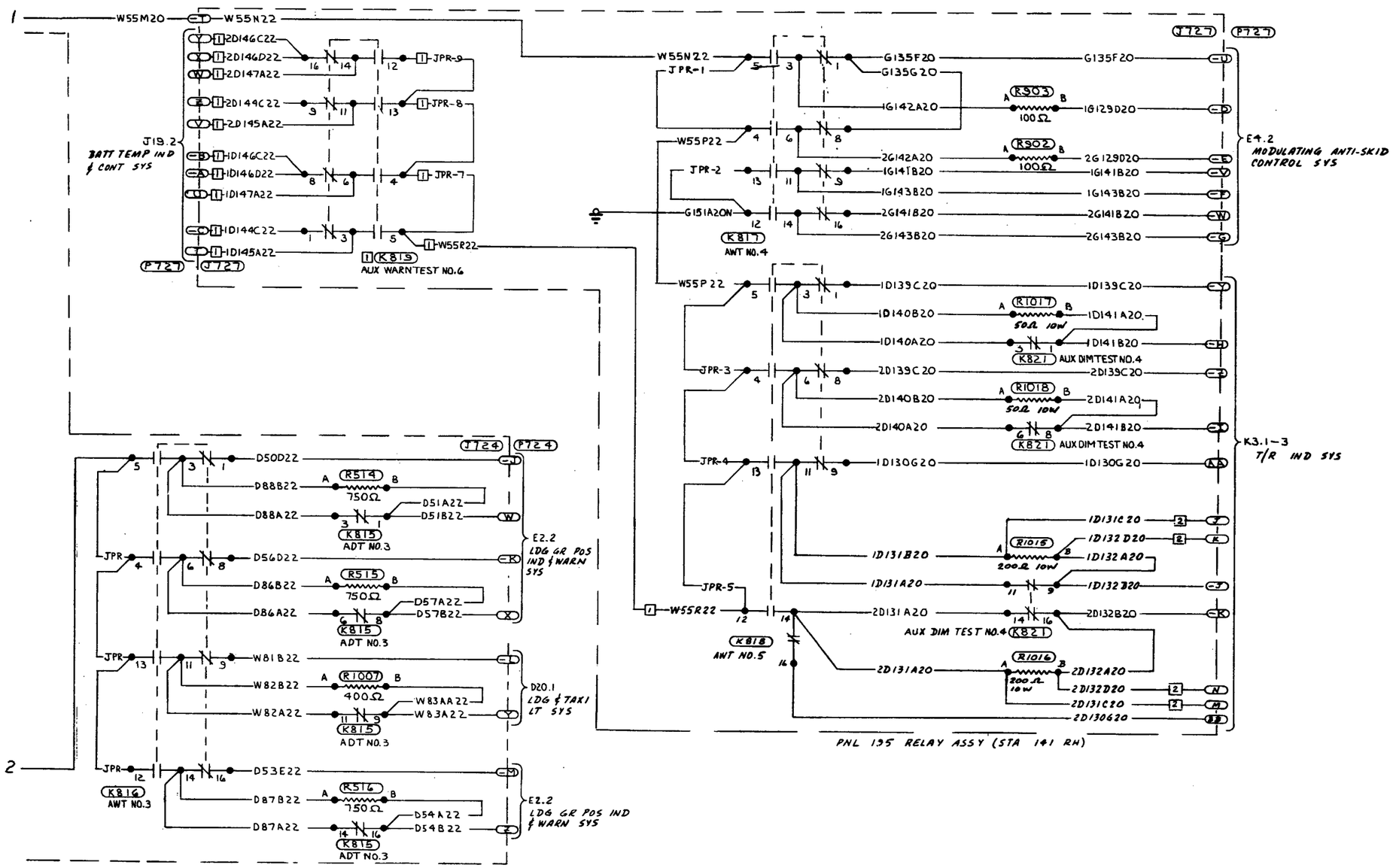

CAUTION WARNING AND INDICATOR LIGHTS DIM AND TEST SYSTEM
(380-5, -10, -12, & Subs)
(Sheet 2 of 2)

© COPYRIGHT, 1981 BY ROCKWELL INTERNATIONAL

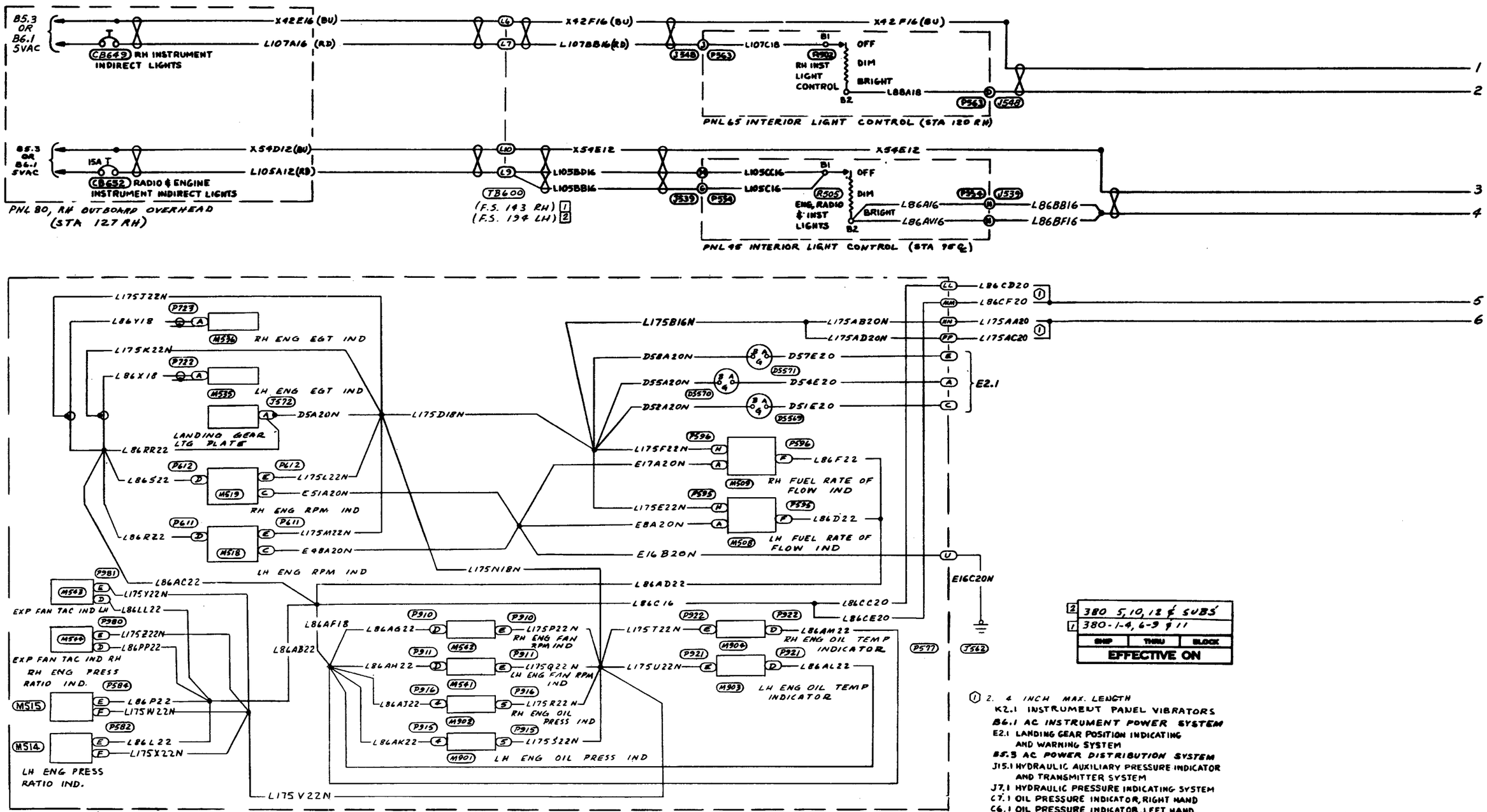

ENGINE, RADIO, & INSTRUMENT INDIRECT LIGHTS SYSTEM
(Sheet 1 of 2)

© COPYRIGHT, 1981 BY ROCKWELL INTERNATIONAL

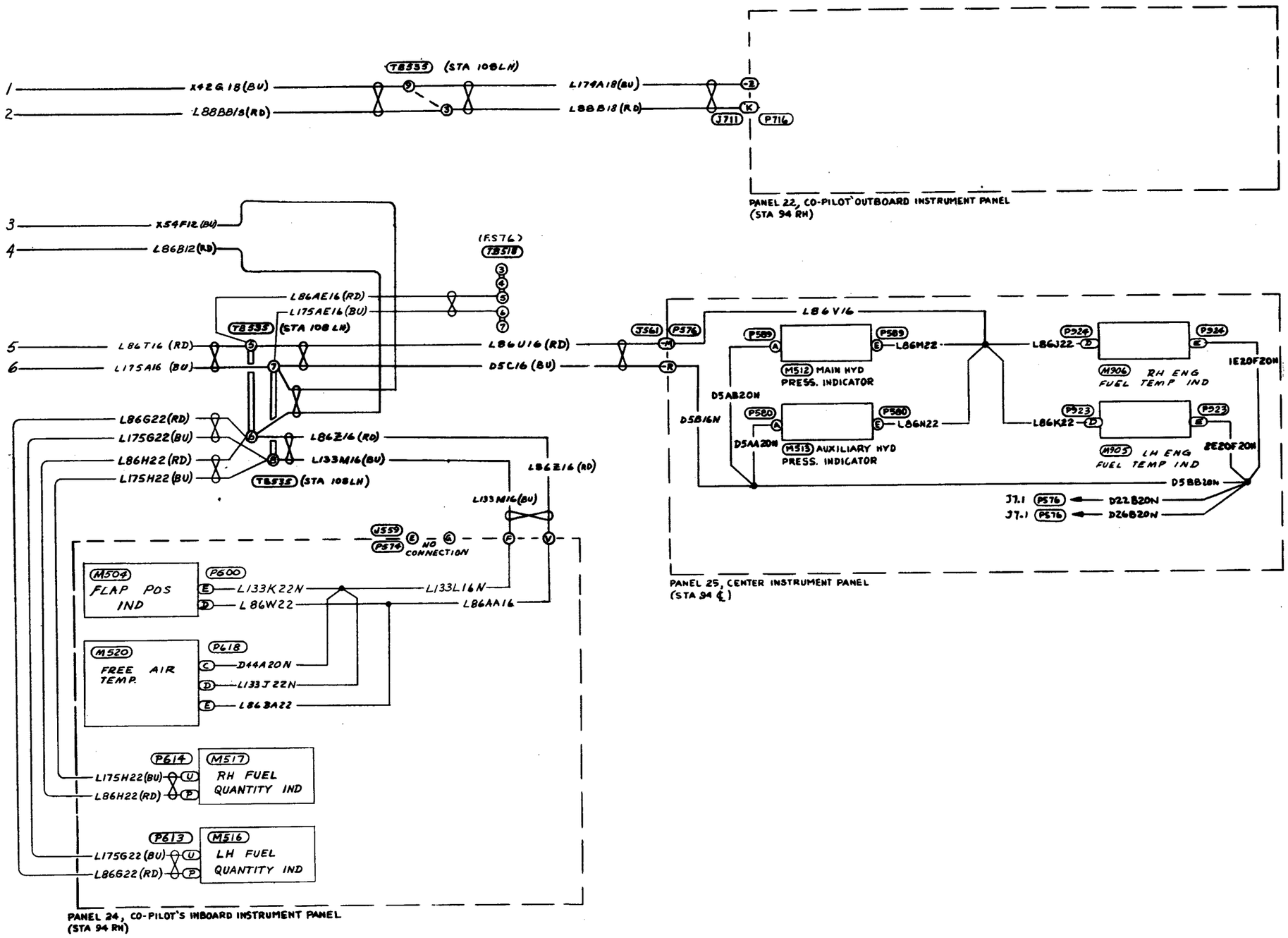

ENGINE, RADIO, & INSTRUMENT INDIRECT LIGHTS SYSTEM
(Sheet 2 of 2)

© COPYRIGHT, 1981 BY ROCKWELL INTERNATIONAL

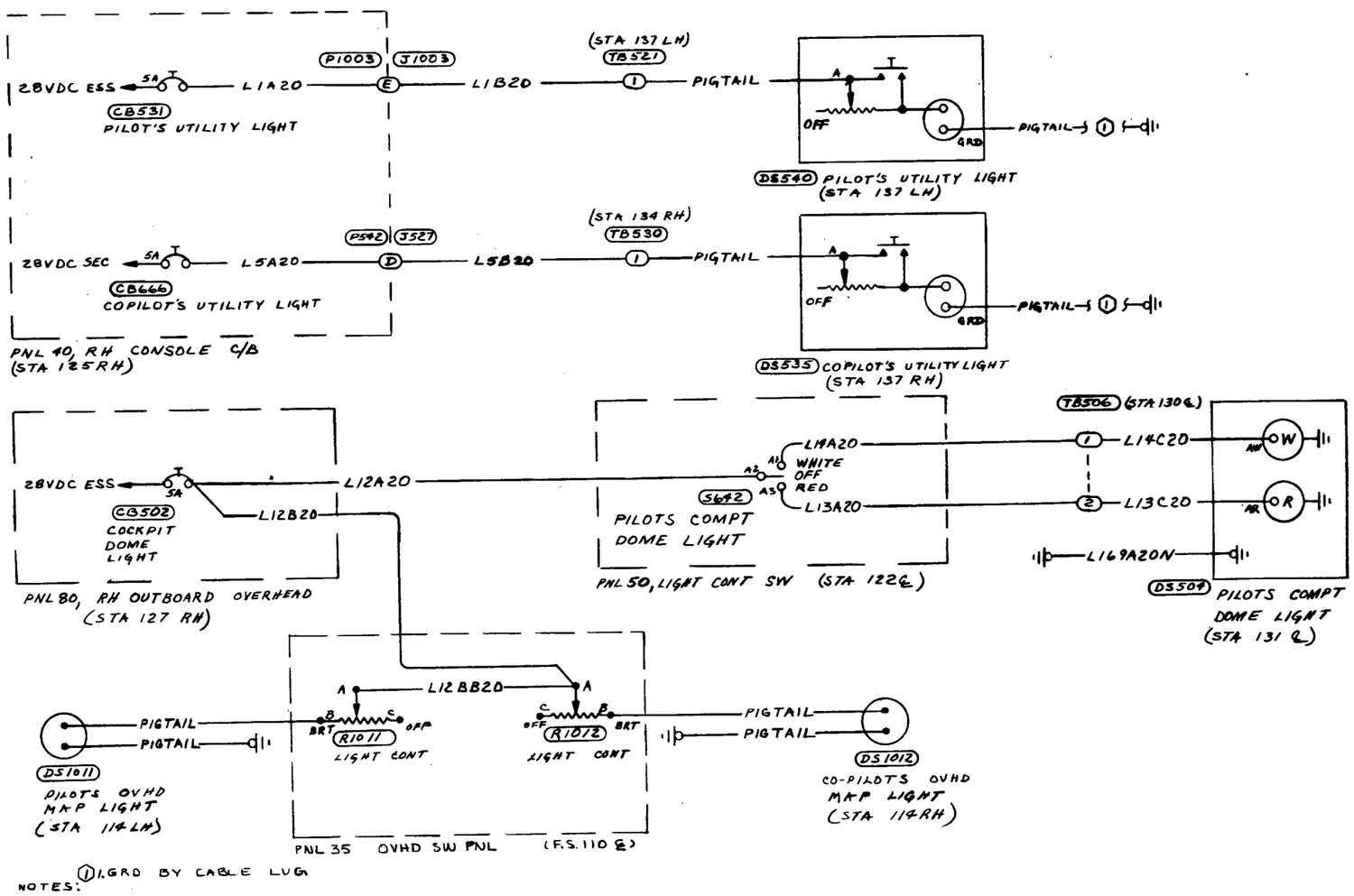

NOTES: (1) 1. GRD BY CABLE LUG

© COPYRIGHT, 1981 BY ROCKWELL INTERNATIONAL

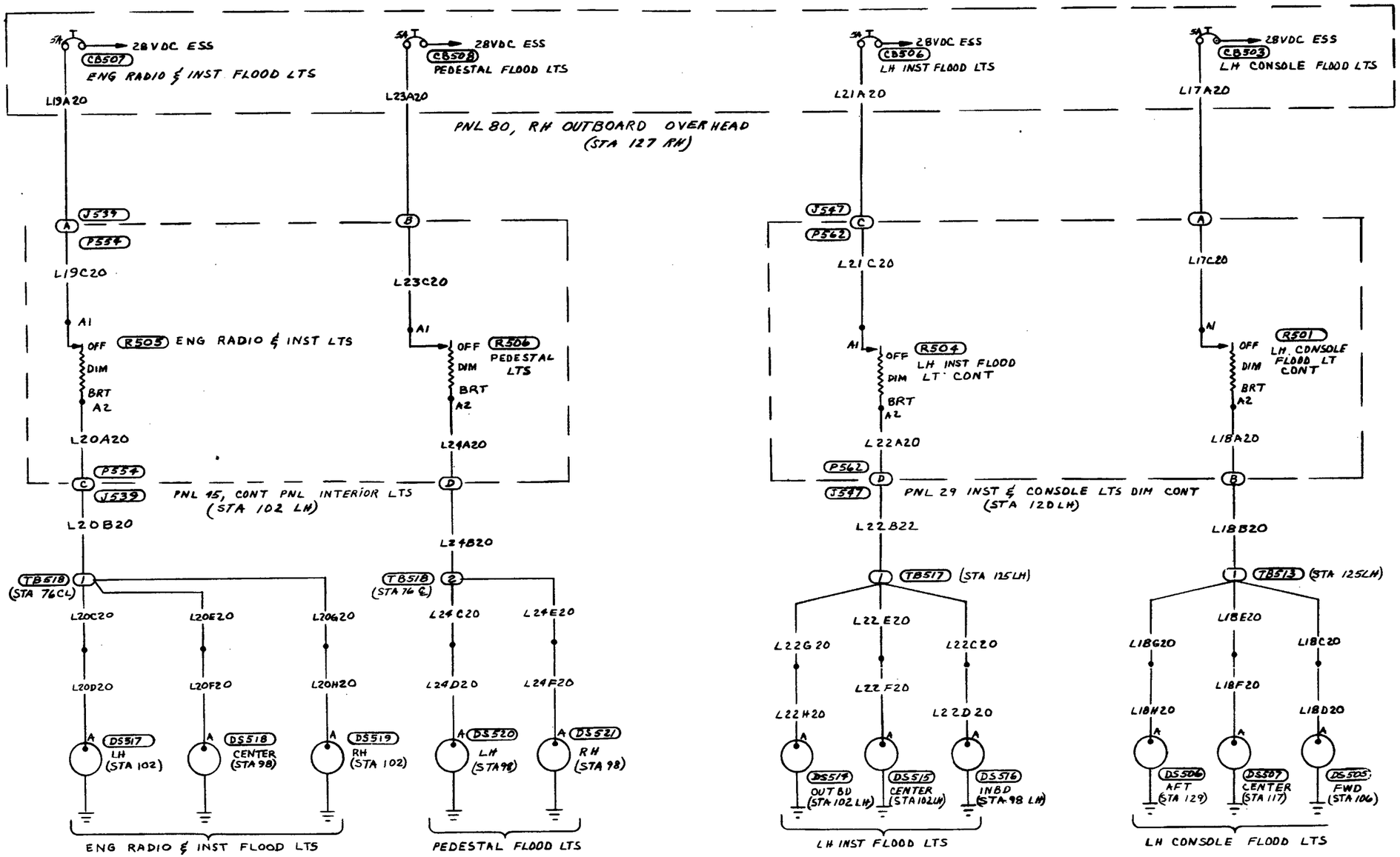

FLOOD LIGHT SYSTEM
(Sheet 1 of 2)

© COPYRIGHT, 1981 BY ROCKWELL INTERNATIONAL

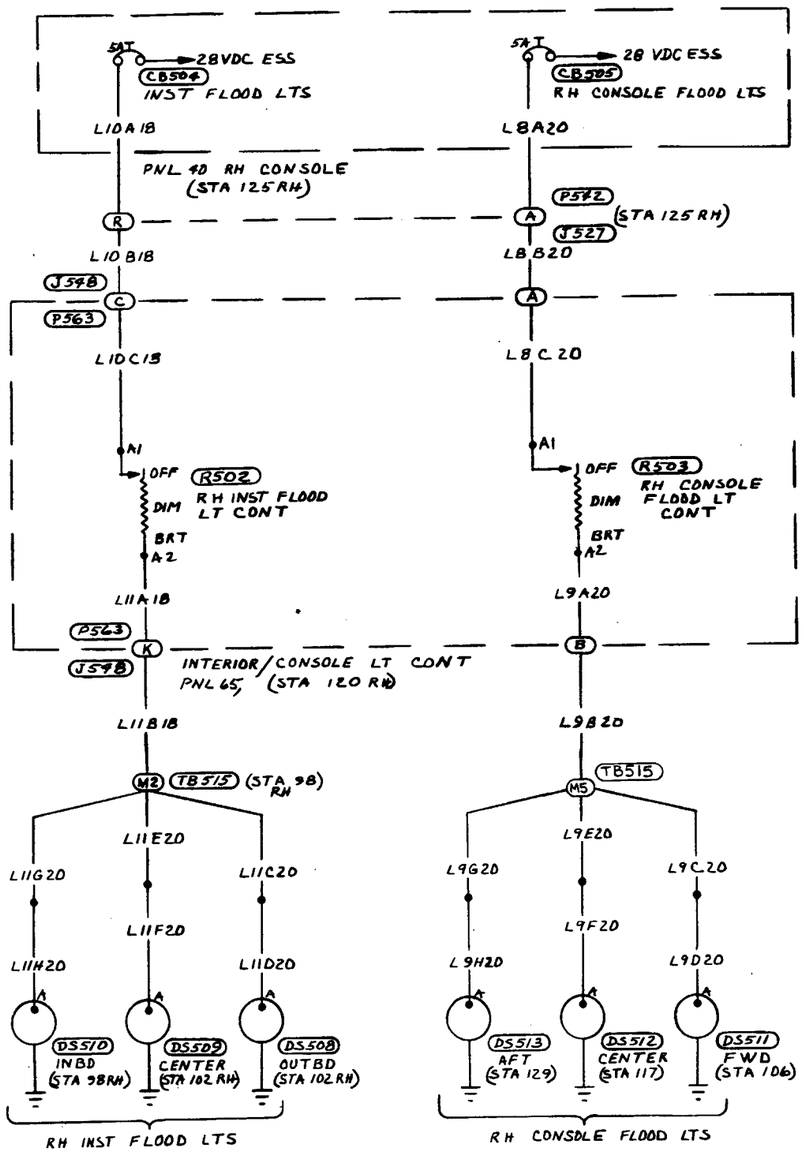

FLOOD LIGHT SYSTEM
(Sheet 2 of 2)

© COPYRIGHT, 1981 BY ROCKWELL INTERNATIONAL

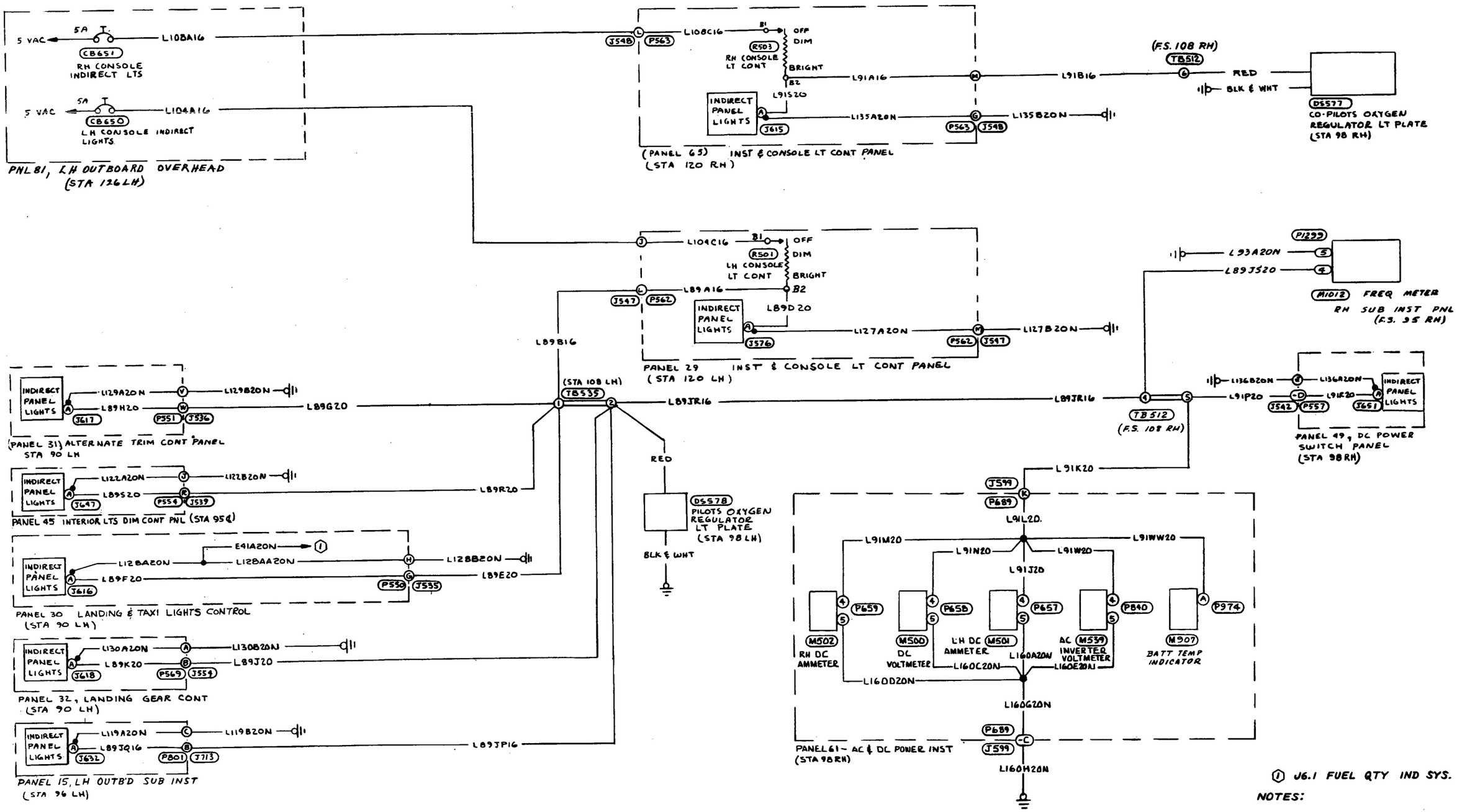

© COPYRIGHT 1981 BY ROCKWELL INTERNATIONAL

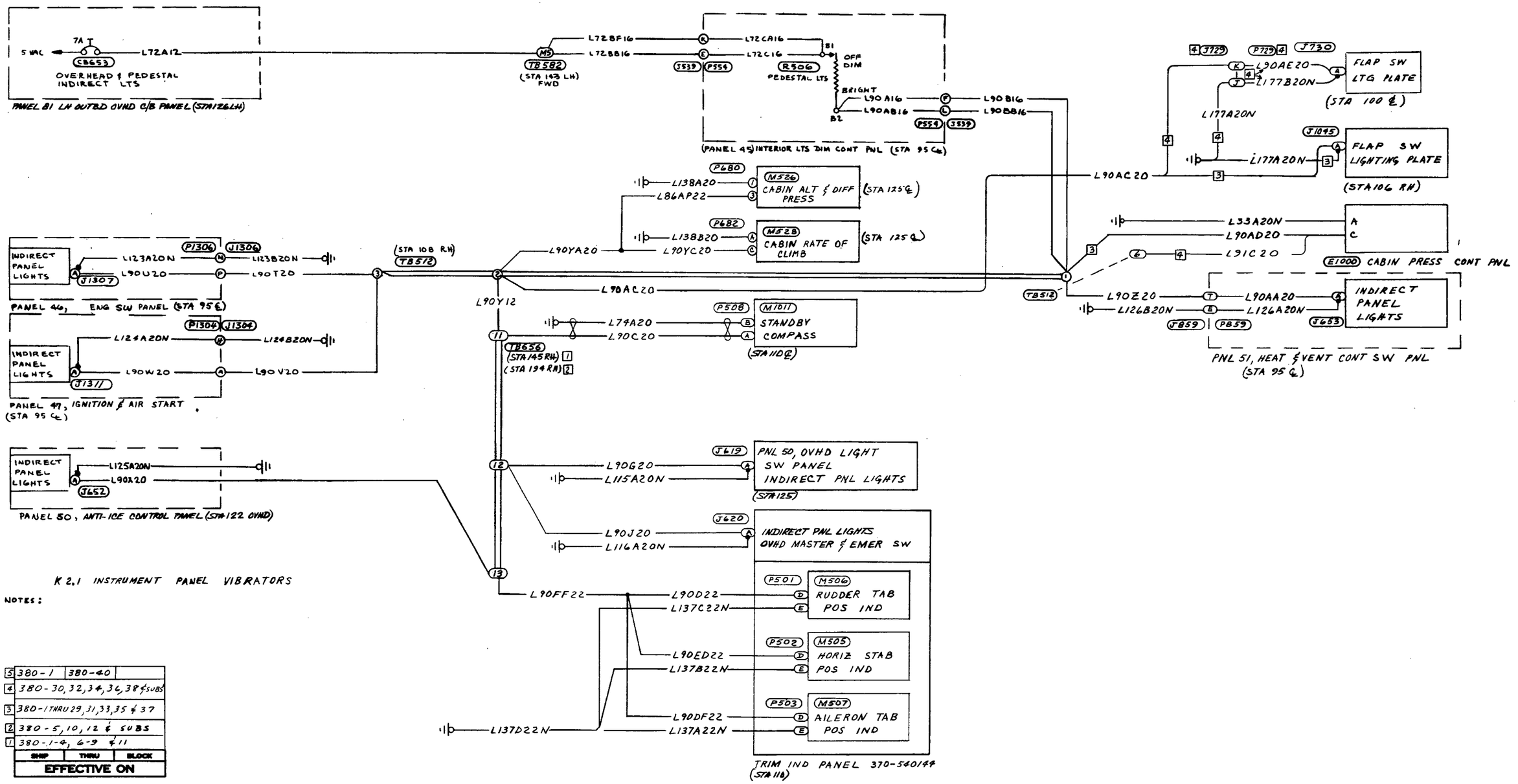

STANDBY COMPASS, PEDESTAL, OVERHEAD AND
LH OUTBD INST PANEL INDIR LTS SYS
(Sheet 1 of 2)

© COPYRIGHT, 1981 BY ROCKWELL INTERNATIONAL

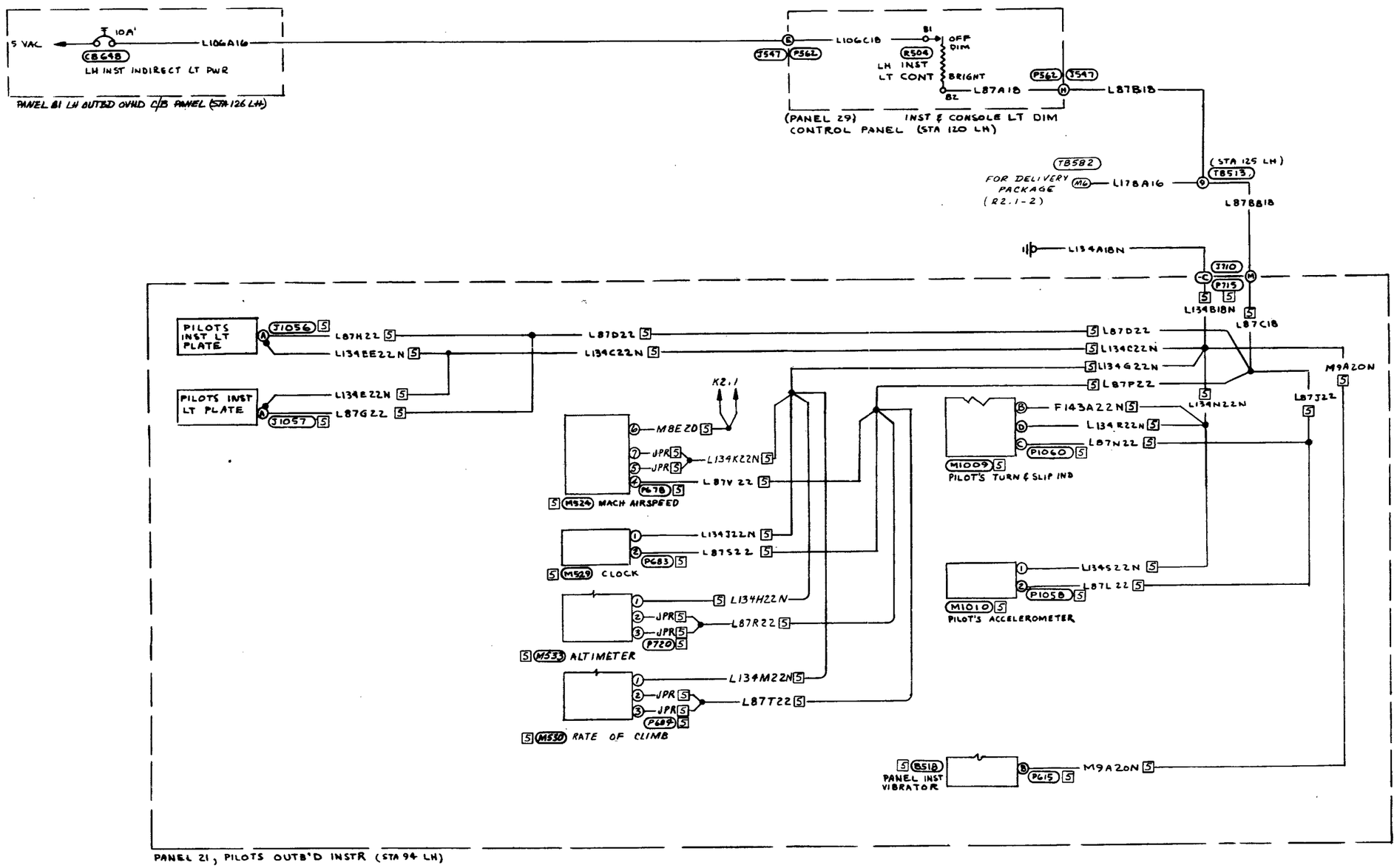

STANDBY COMPASS, PEDESTAL, OVERHEAD AND
LH OUTBD INST PANEL INDIR LTS SYS
(Sheet 2 of 2)

© COPYRIGHT, 1981 BY ROCKWELL INTERNATIONAL

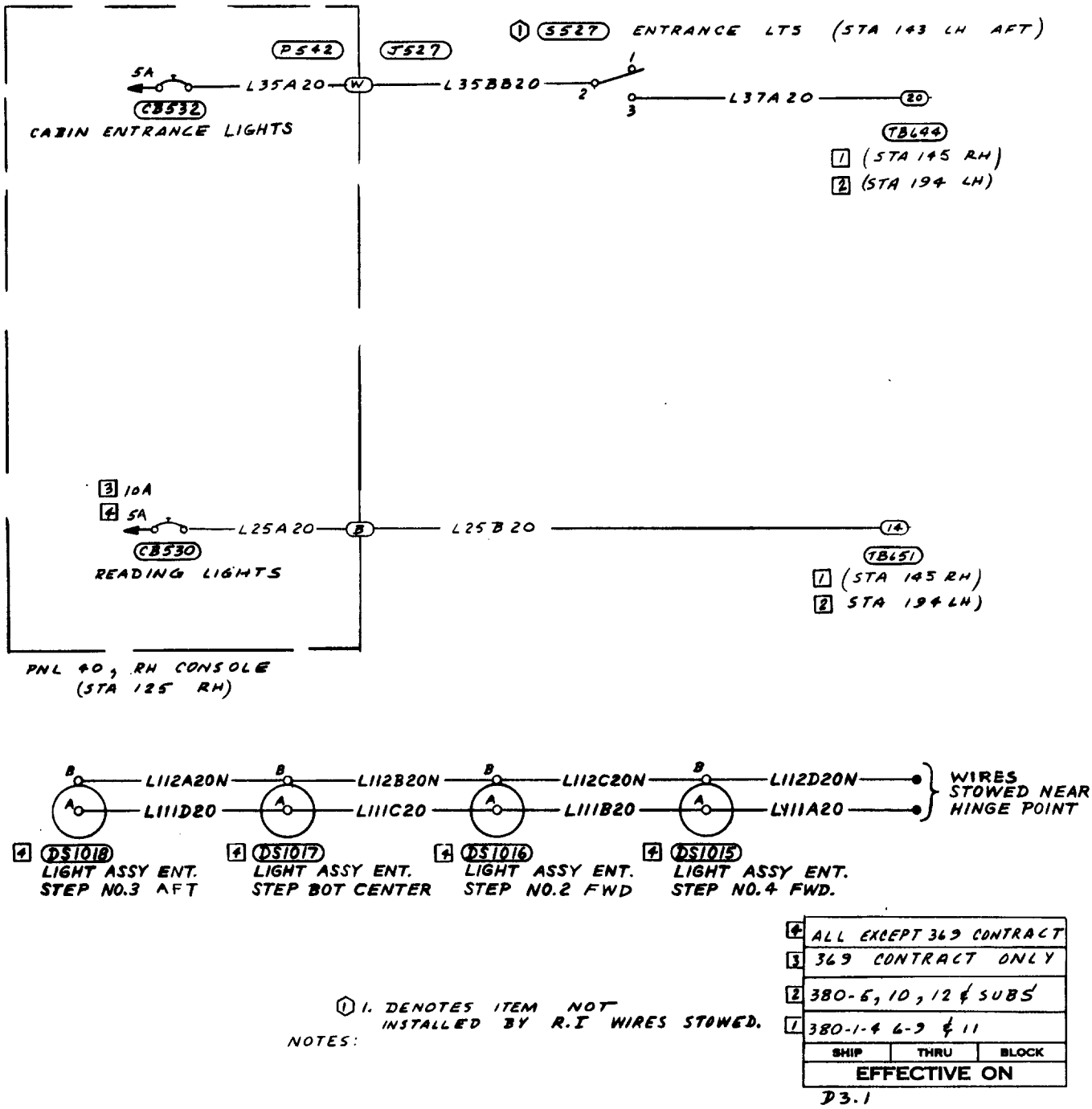

NOTES:

1. DENOTES ITEM NOT INSTALLED BY R.I WIRES STOWED.

4	ALL EXCEPT 369 CONTRACT
3	369 CONTRACT ONLY
2	380-6, 10, 12 & SUBS
1	380-1-4 6-9 & 11

SHIP	THRU	BLOCK
EFFECTIVE ON		

D3.1

CABIN ENTRANCE & PASSENGERS READING LIGHTS
(PROV)

© COPYRIGHT, 1981 BY ROCKWELL INTERNATIONAL

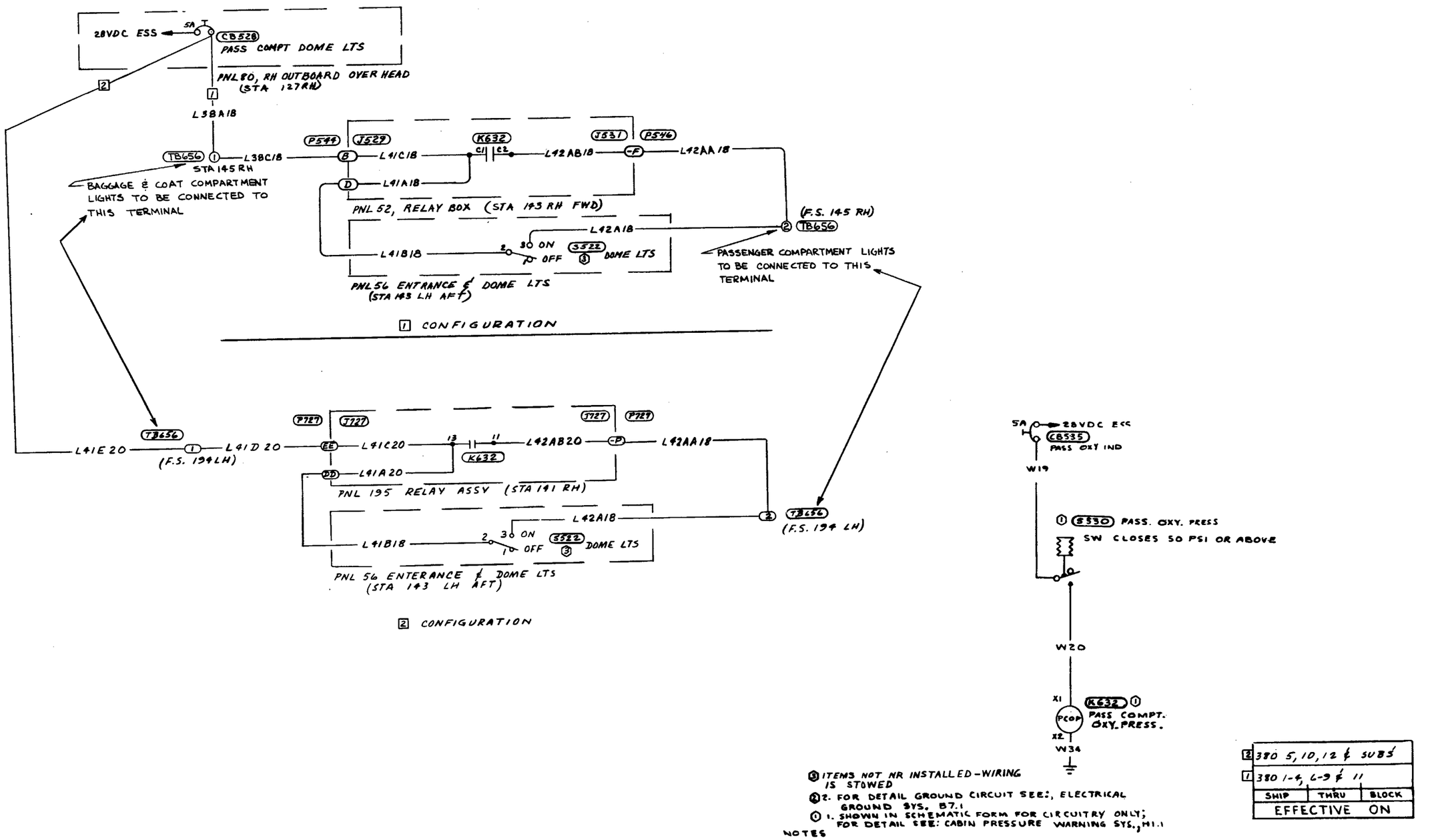

© COPYRIGHT 1981 BY ROCKWELL INTERNATIONAL

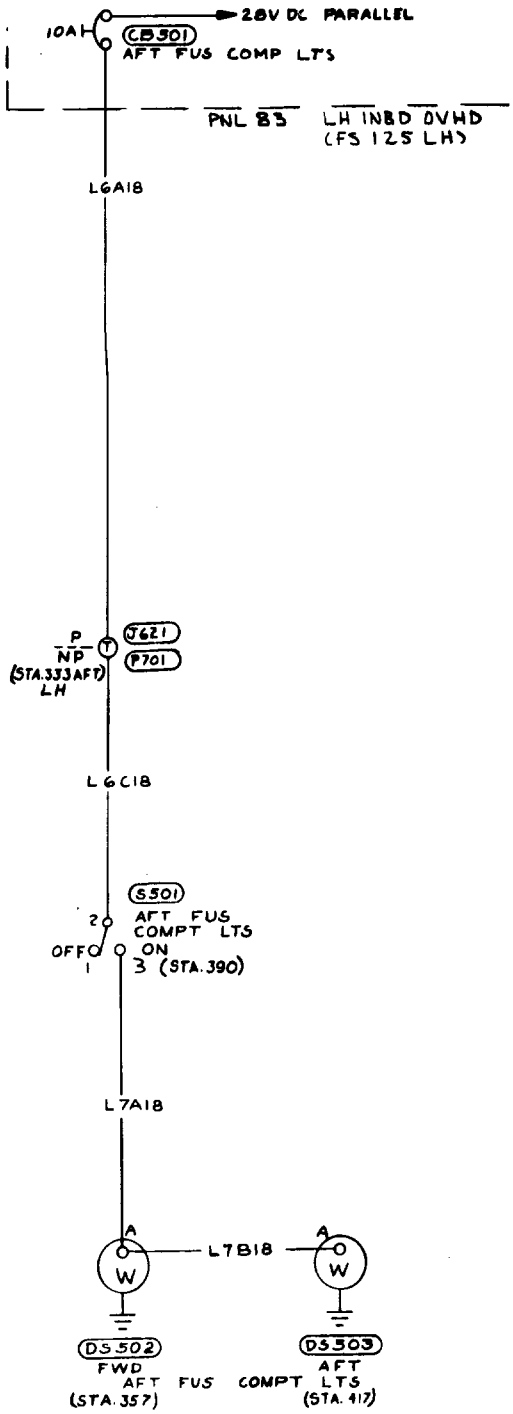

SHIP	THRU	BLOCK
EFFECTIVE ON		

D19.1

© COPYRIGHT, 1981 BY ROCKWELL INTERNATIONAL

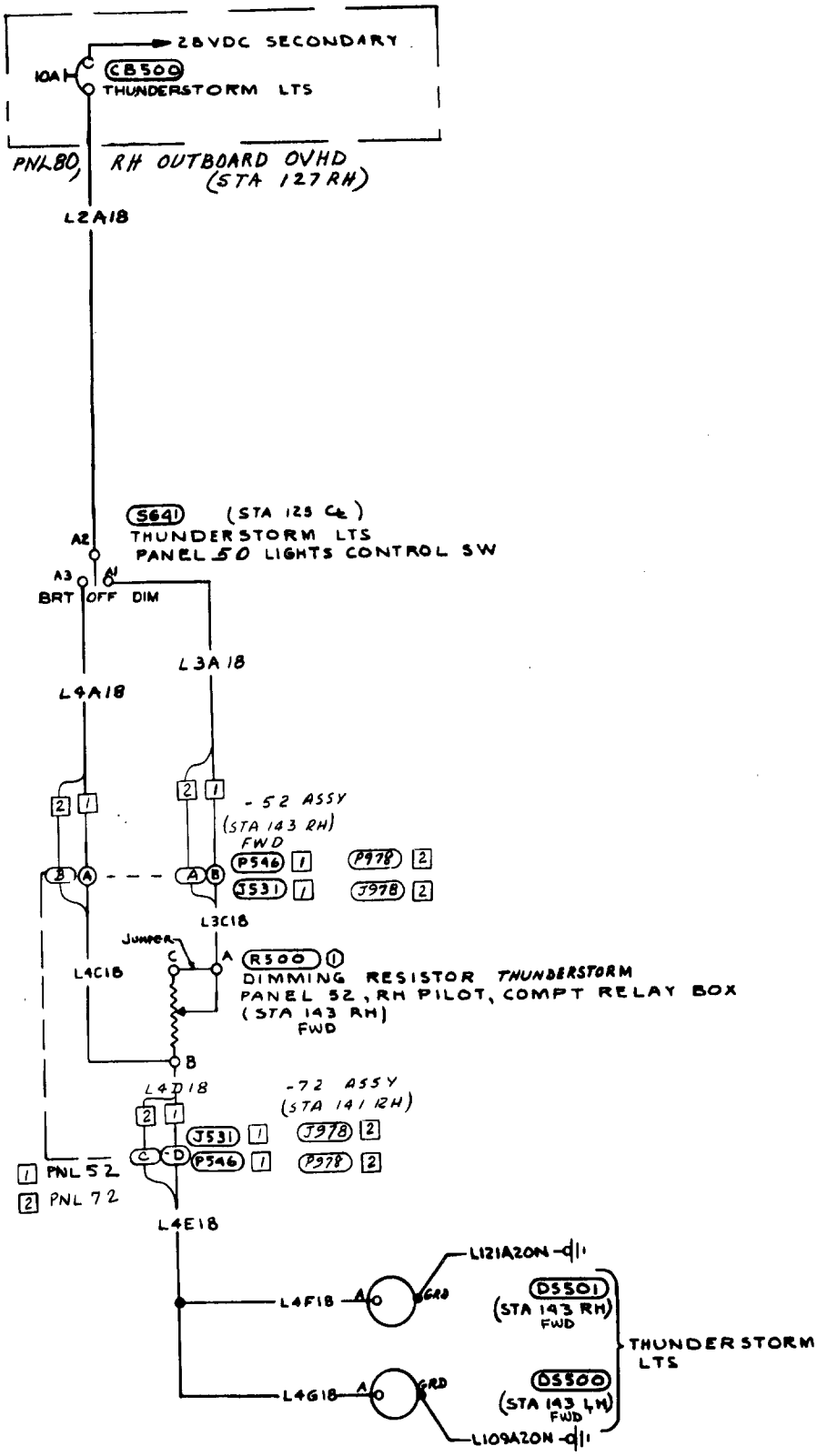

2	380- 5, 10, 12 & SUBS
1	380-1-4, 6-9 & 11

SHIP	THRU	MODEL
EFFECTIVE ON		

D9.1

NOTES:

1. ADJUST RESISTANCE TO 10 OHMS.

© COPYRIGHT, 1981 BY ROCKWELL INTERNATIONAL

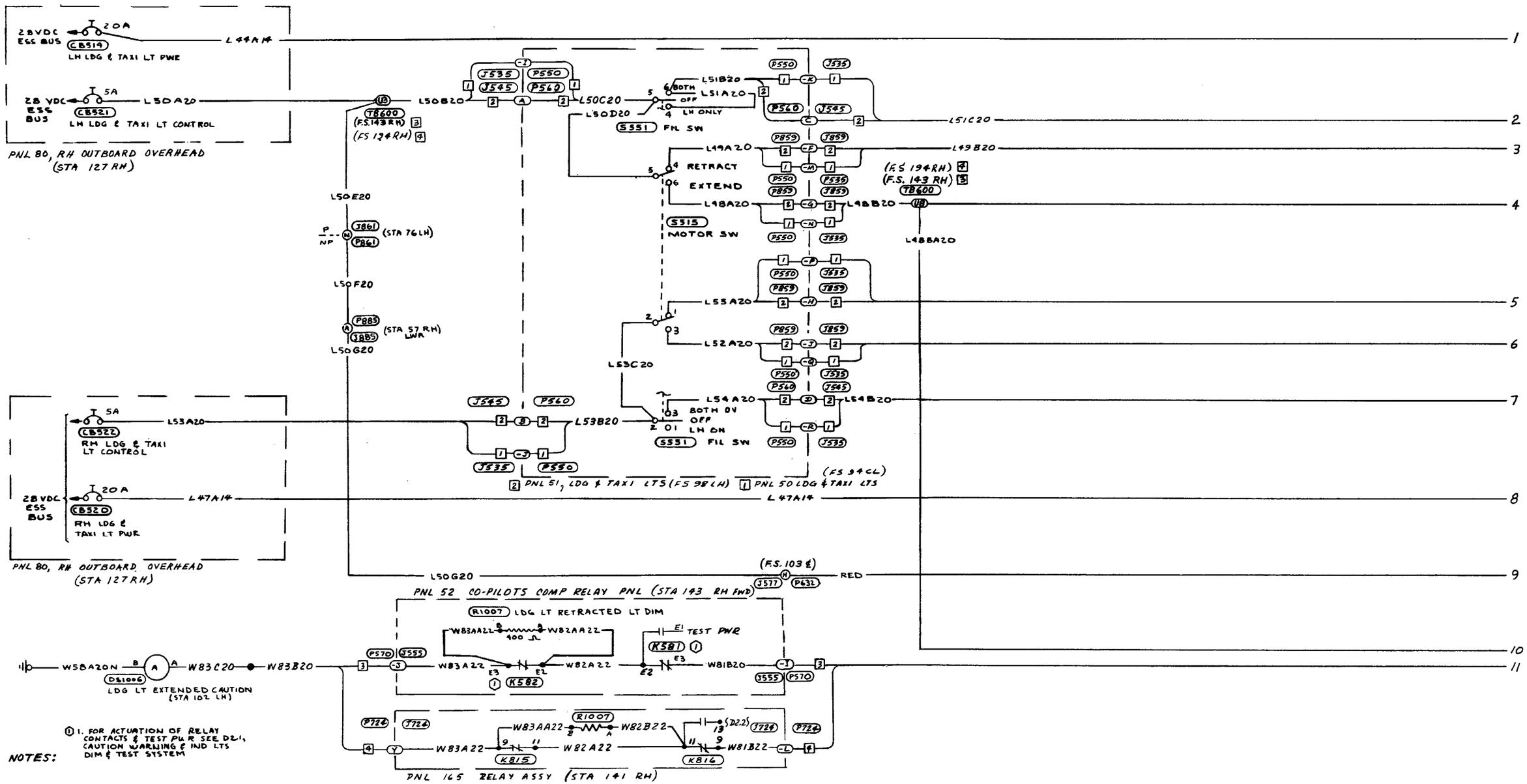

NOTES:

1. FOR ACTUATION OF RELAY CONTACTS & TEST PWR SEE D21, CAUTION WARNING & IND LTS DIM & TEST SYSTEM

4	380-12 THRU -29 369 CONT NOT INCLUDED		
3	380-1-4, 6-9 & 11		
2	380-4 THRU 29; 369 CONT NOT INCLUDED		
1	380-1	380-3	
	SHIP	THRU	BLOCK
	EFFECTIVE ON		

LANDING AND TAXI LIGHT SYSTEM
(380-1 Thru -29, 369 Cont Not Included)
(Sheet 1 of 2)

© COPYRIGHT, 1981 BY ROCKWELL INTERNATIONAL

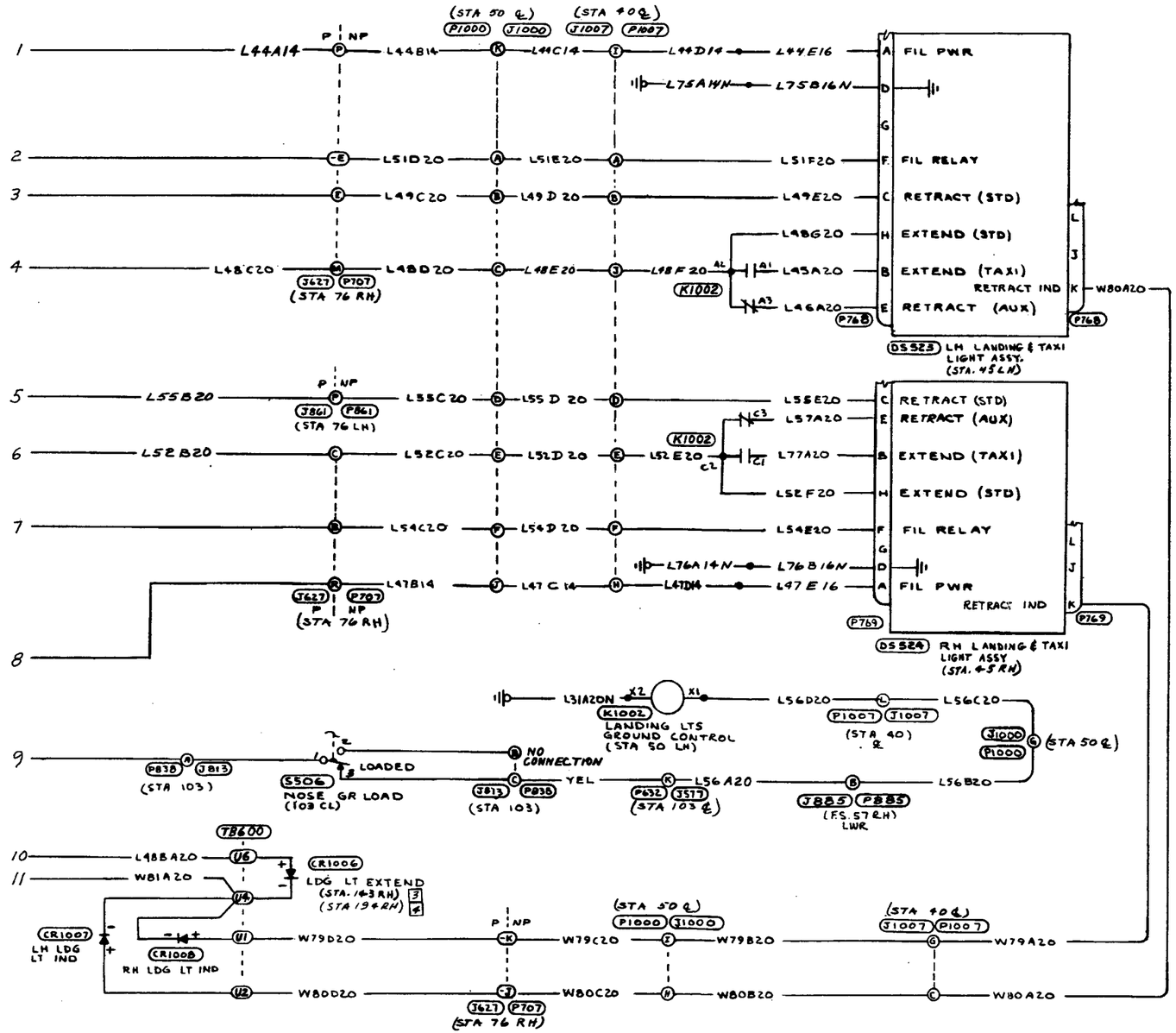

LANDING AND TAXI LIGHT SYSTEM
(380-1 Thru -29, 369 Cont Not Included)
(Sheet 2 of 2)

© COPYRIGHT, 1981 BY ROCKWELL INTERNATIONAL

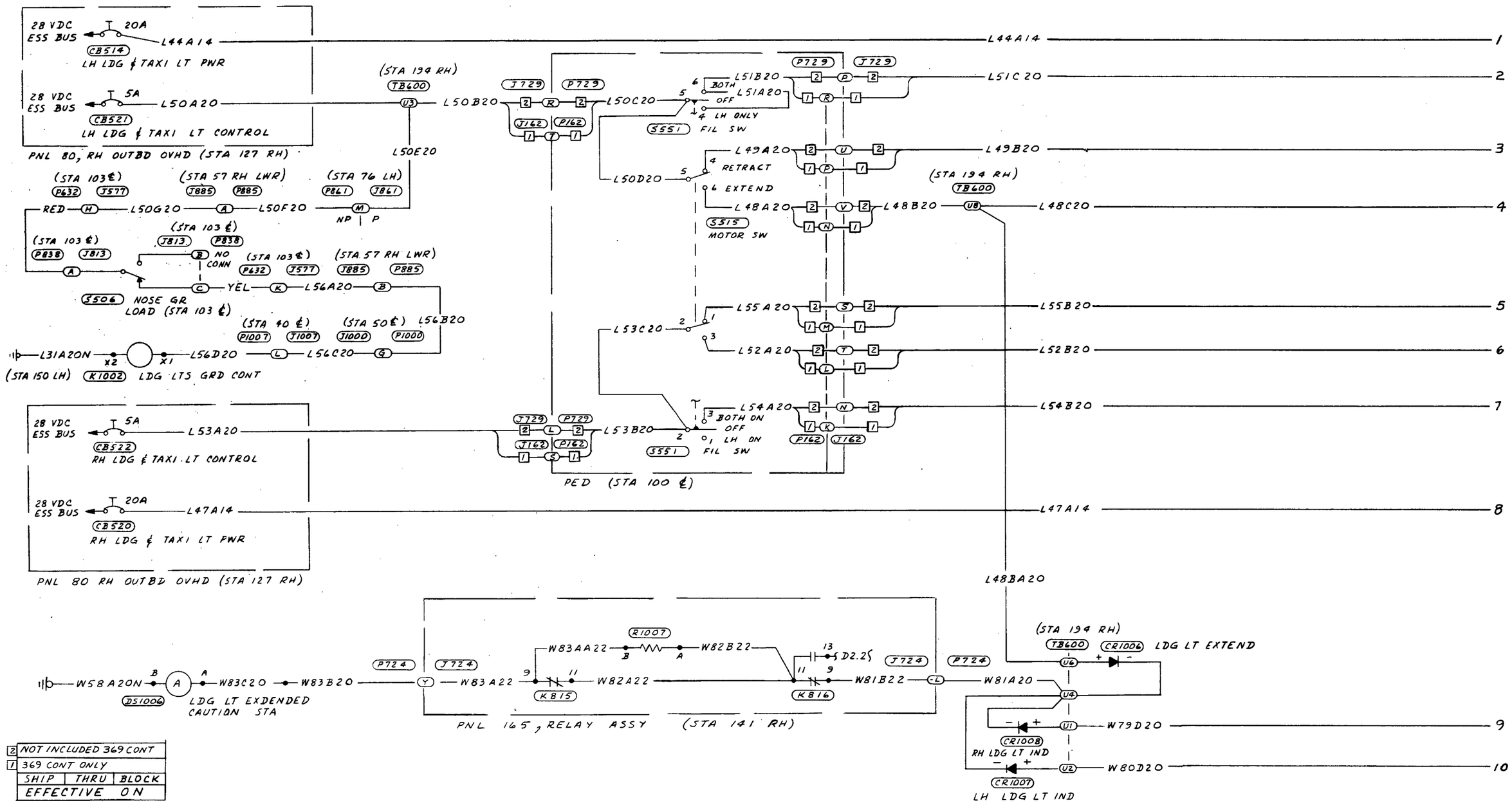

2	NOT INCLUDED 369 CONT
1	369 CONT ONLY
SHIP	THRU BLOCK
EFFECTIVE ON	

LANDING AND TAXI LIGHT SYSTEM
(380-5, -10, -14, -16, -18, -20,
-22, -24, -26, -28, -29, -30, & Subs)
(Sheet 1 of 2)

© COPYRIGHT, 1981 BY ROCKWELL INTERNATIONAL

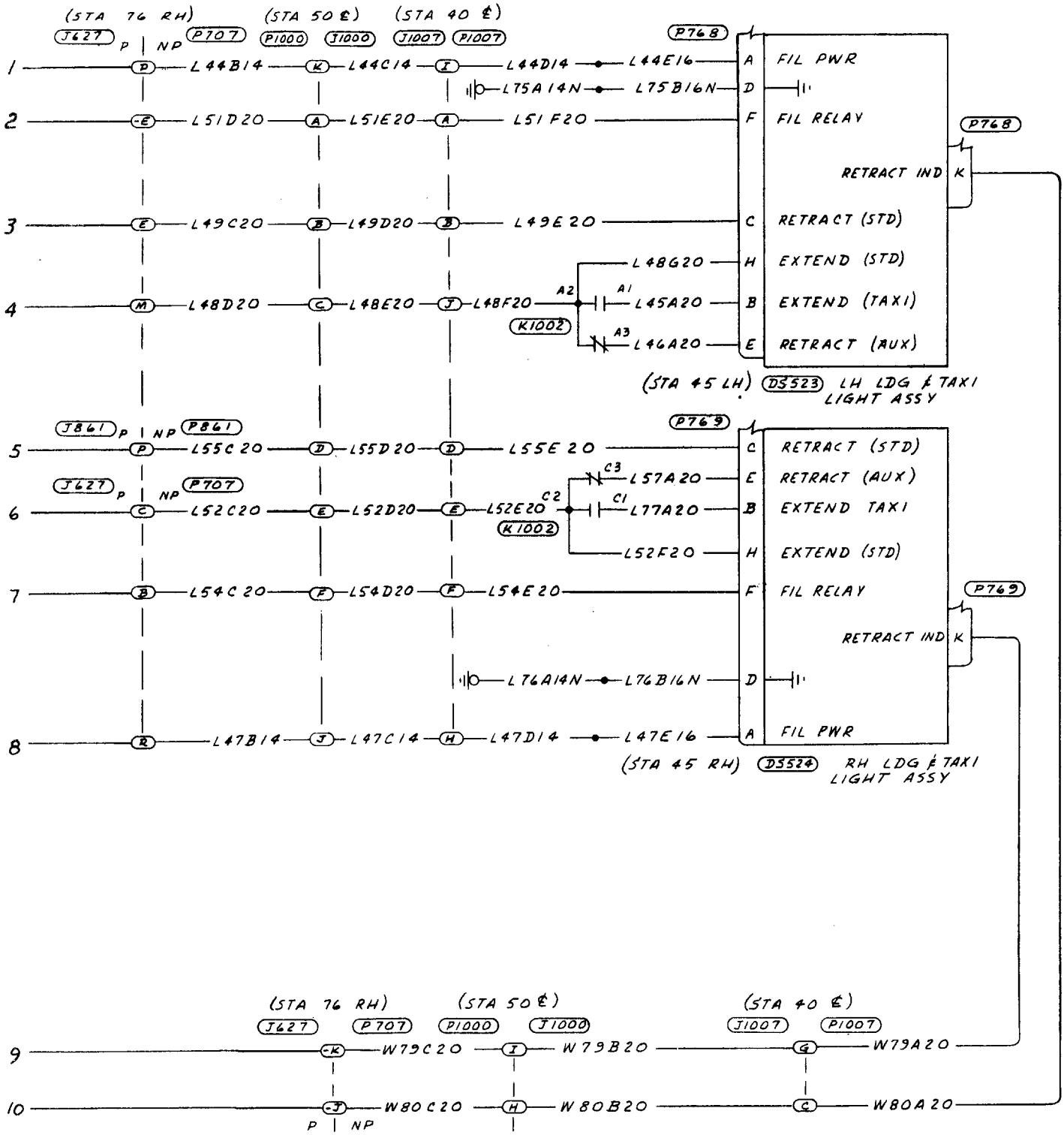

LANDING AND TAXI LIGHT SYSTEM
(380-5, -10, -14, -16, -18, -20,
-22, -24, -26, -28, -29, -30, & Subs)
(Sheet 2 of 2)

© COPYRIGHT, 1981 BY ROCKWELL INTERNATIONAL

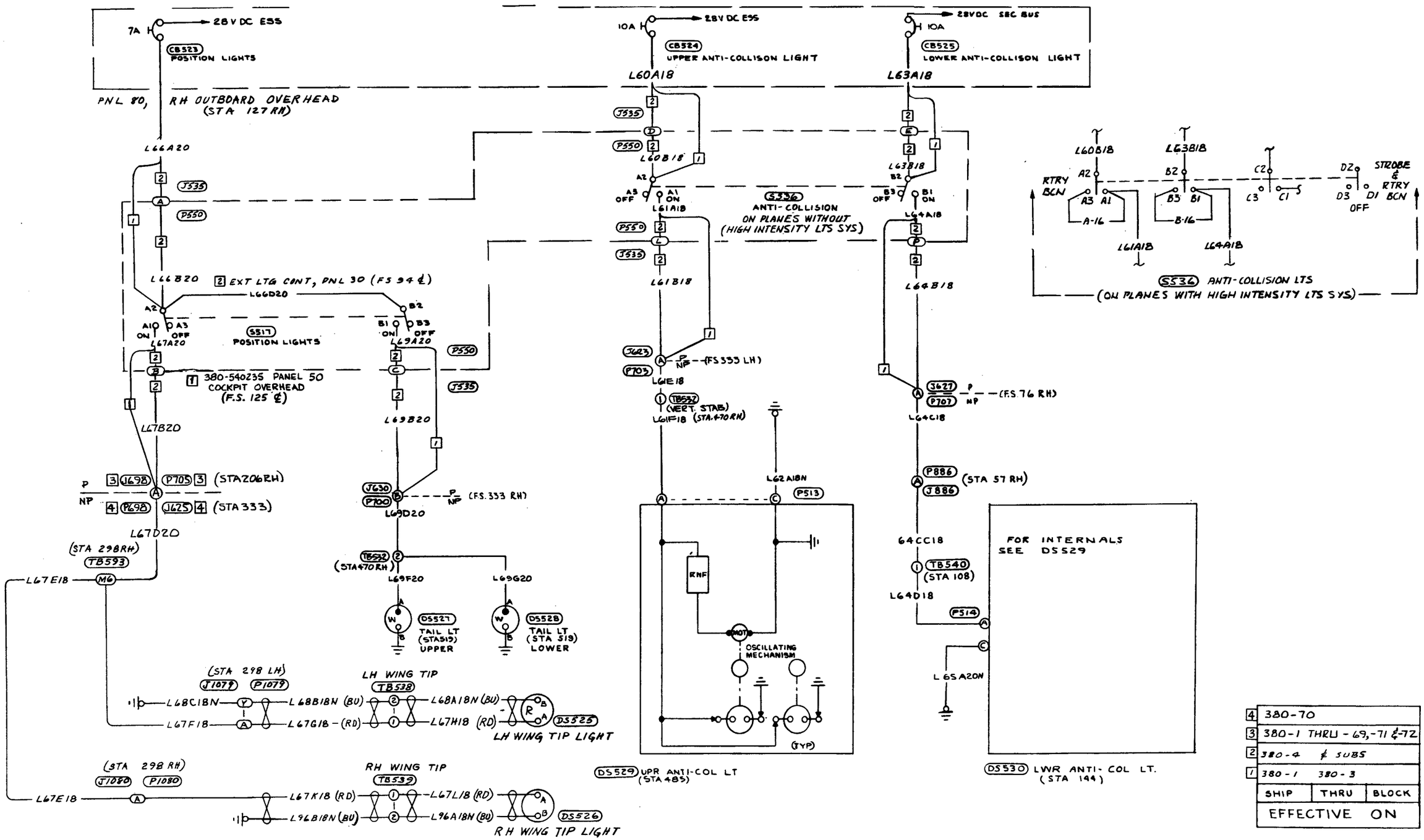

4	380-70
3	380-1 THRU -69, -71 & -72
2	380-4 & SUBS
1	380-1 380-3

SHIP	THRU	BLOCK
EFFECTIVE ON		

© COPYRIGHT, 1981 BY ROCKWELL INTERNATIONAL

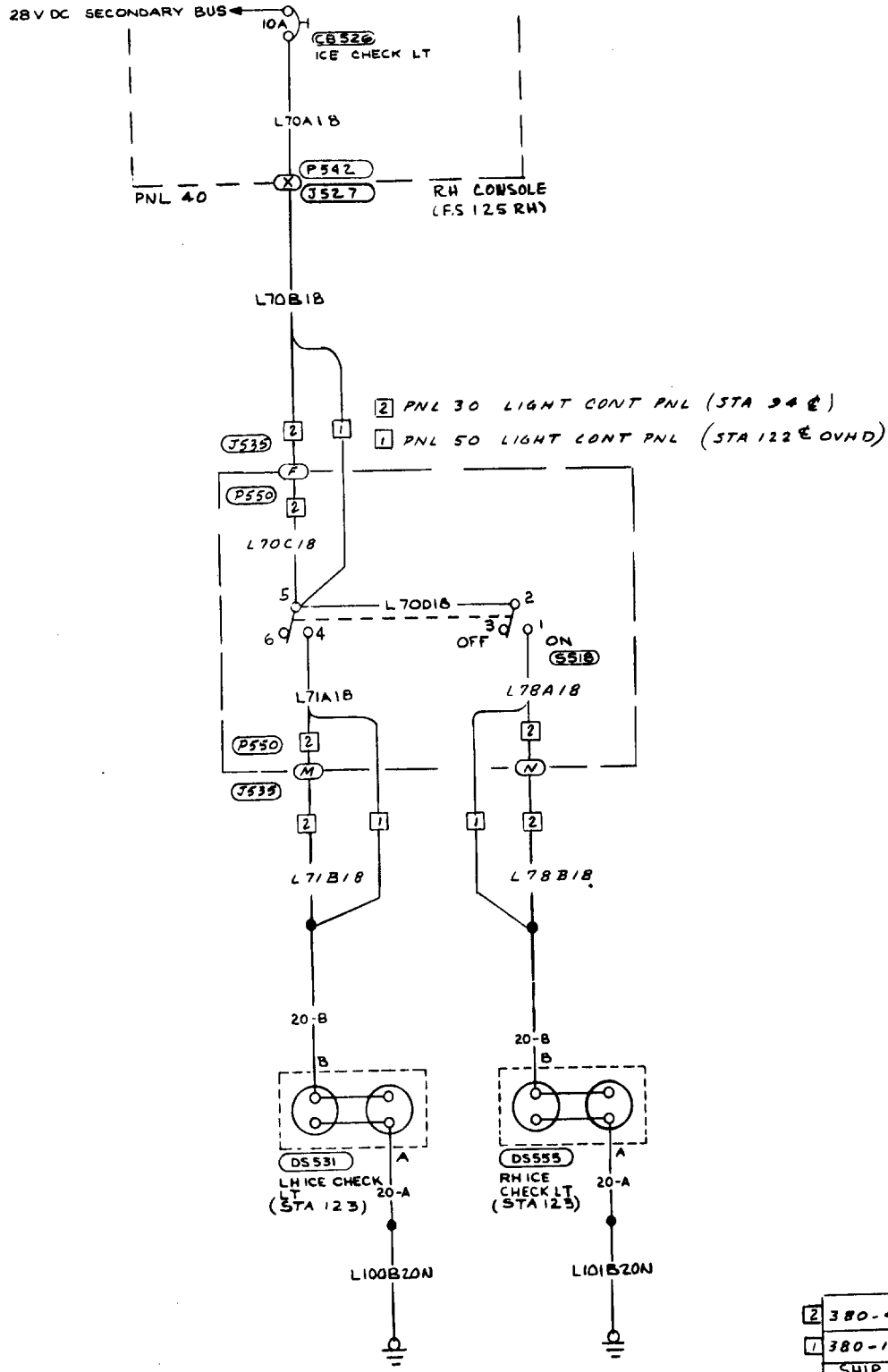

2	380-4	~~5~~ 5U85	
1	380-1	380-3	
SHIP		THRU	BLOCK
EFFECTIVE ON			

D22.1

© COPYRIGHT, 1981 BY ROCKWELL INTERNATIONAL

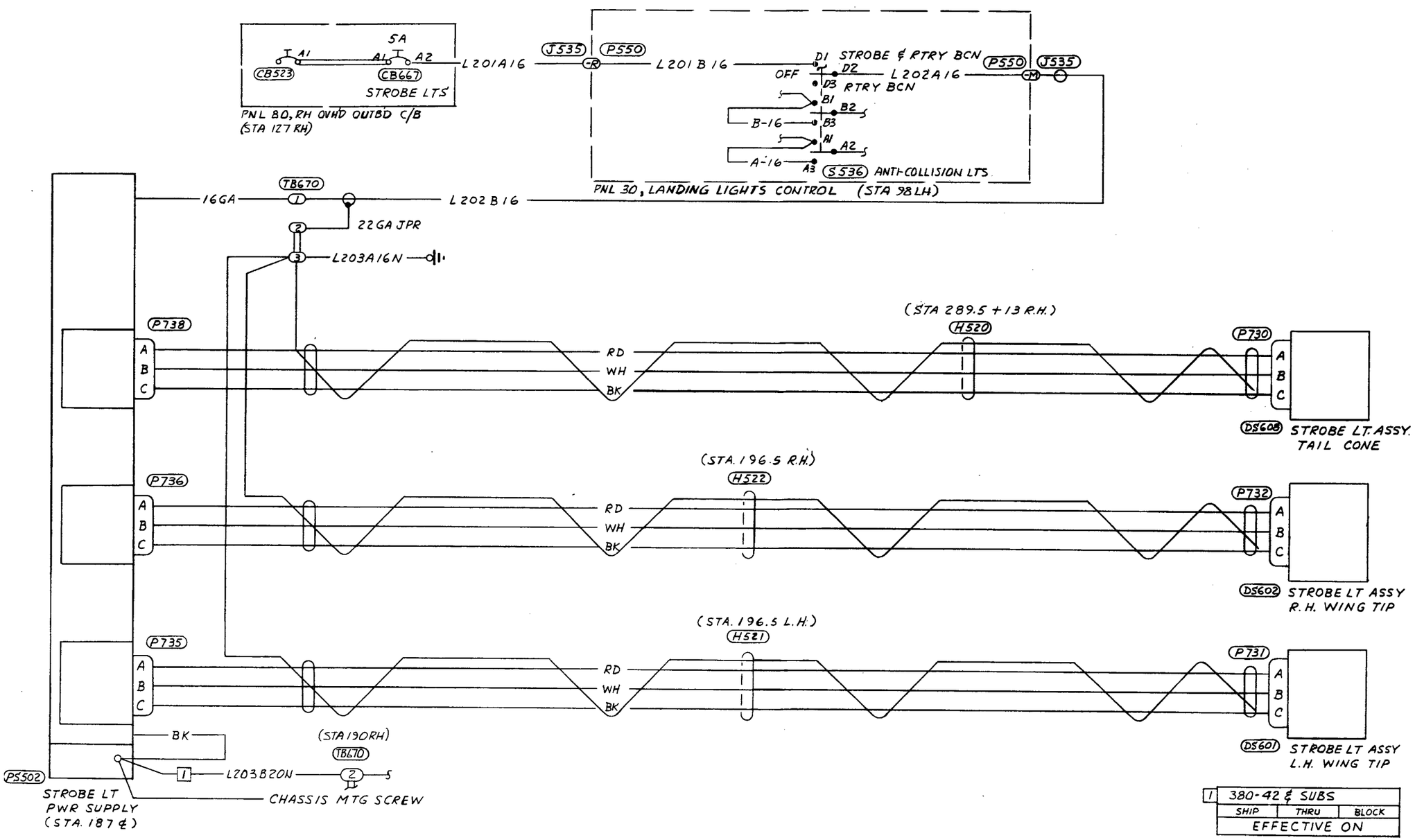

HIGH INTENSITY LIGHTS
(380-41 and Subs, and Airplanes
Changed by Service Bulletin No. 13)

© COPYRIGHT, 1981 BY ROCKWELL INTERNATIONAL

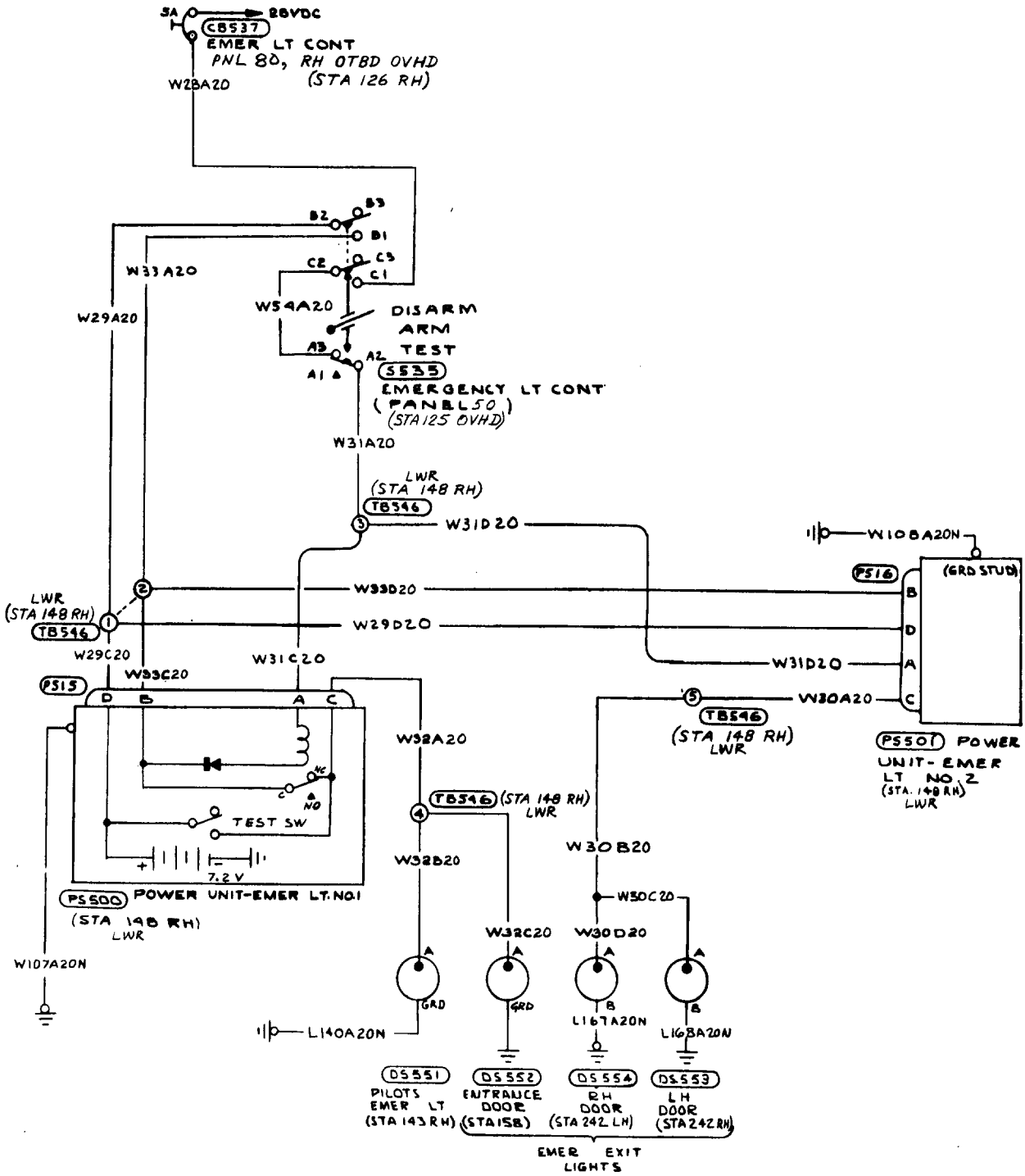

SHIP	THRU	BLOCK
EFFECTIVE ON		

D1.1

© COPYRIGHT, 1981 BY ROCKWELL INTERNATIONAL

CHAPTER

34

NAVIGATION

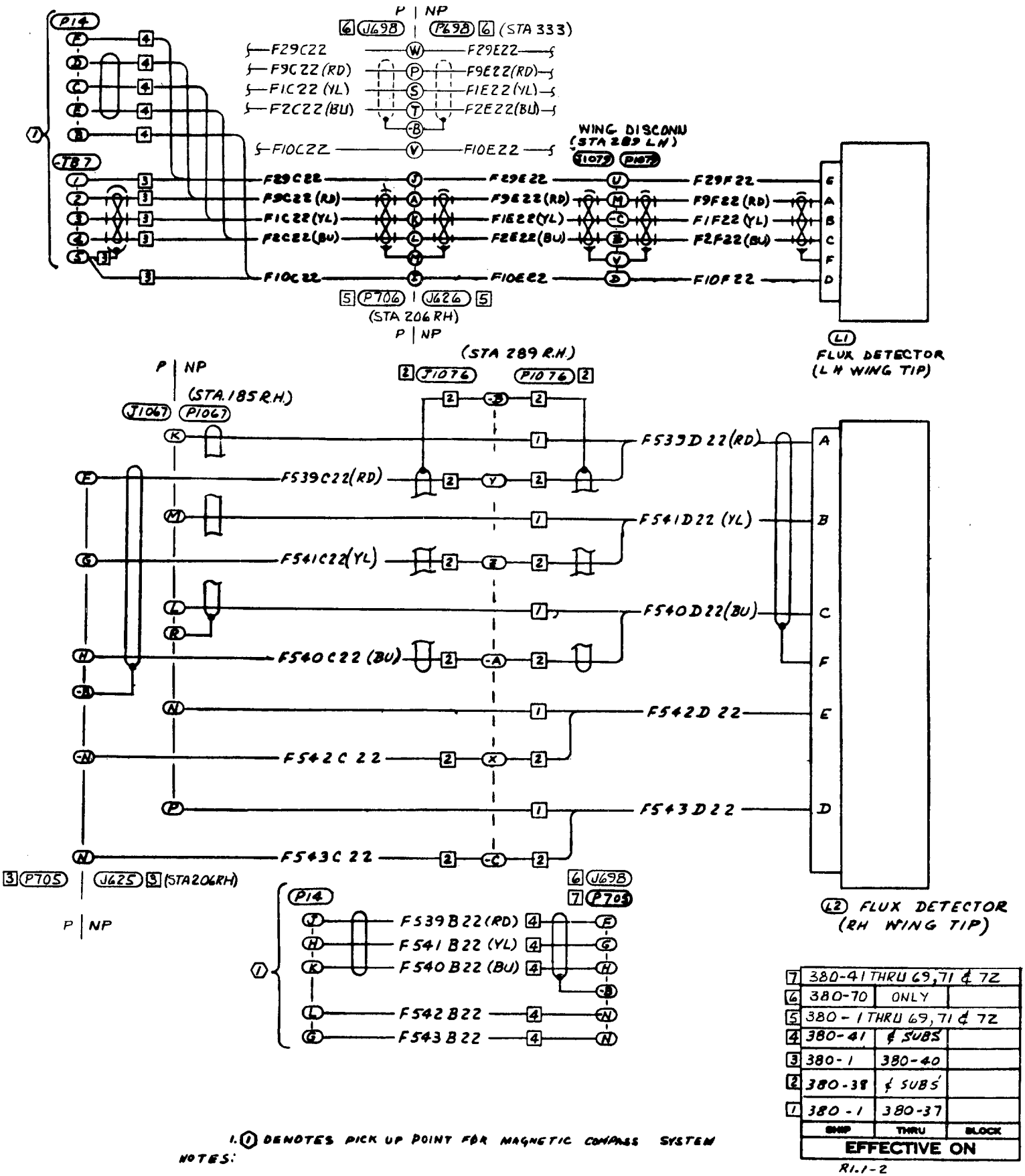

7	380-41 THRU 69, 71 & 72		
6	380-70	ONLY	
5	380-1 THRU 69, 71 & 72		
4	380-41	& SUBS	
3	380-1	380-40	
2	380-38	& SUBS	
1	380-1	380-37	
	SHIP	THRU	BLOCK
	EFFECTIVE ON		

R1.1-2

NOTES:

1. (1) DENOTES PICK UP POINT FOR MAGNETIC COMPASS SYSTEM

© COPYRIGHT, 1981 BY ROCKWELL INTERNATIONAL

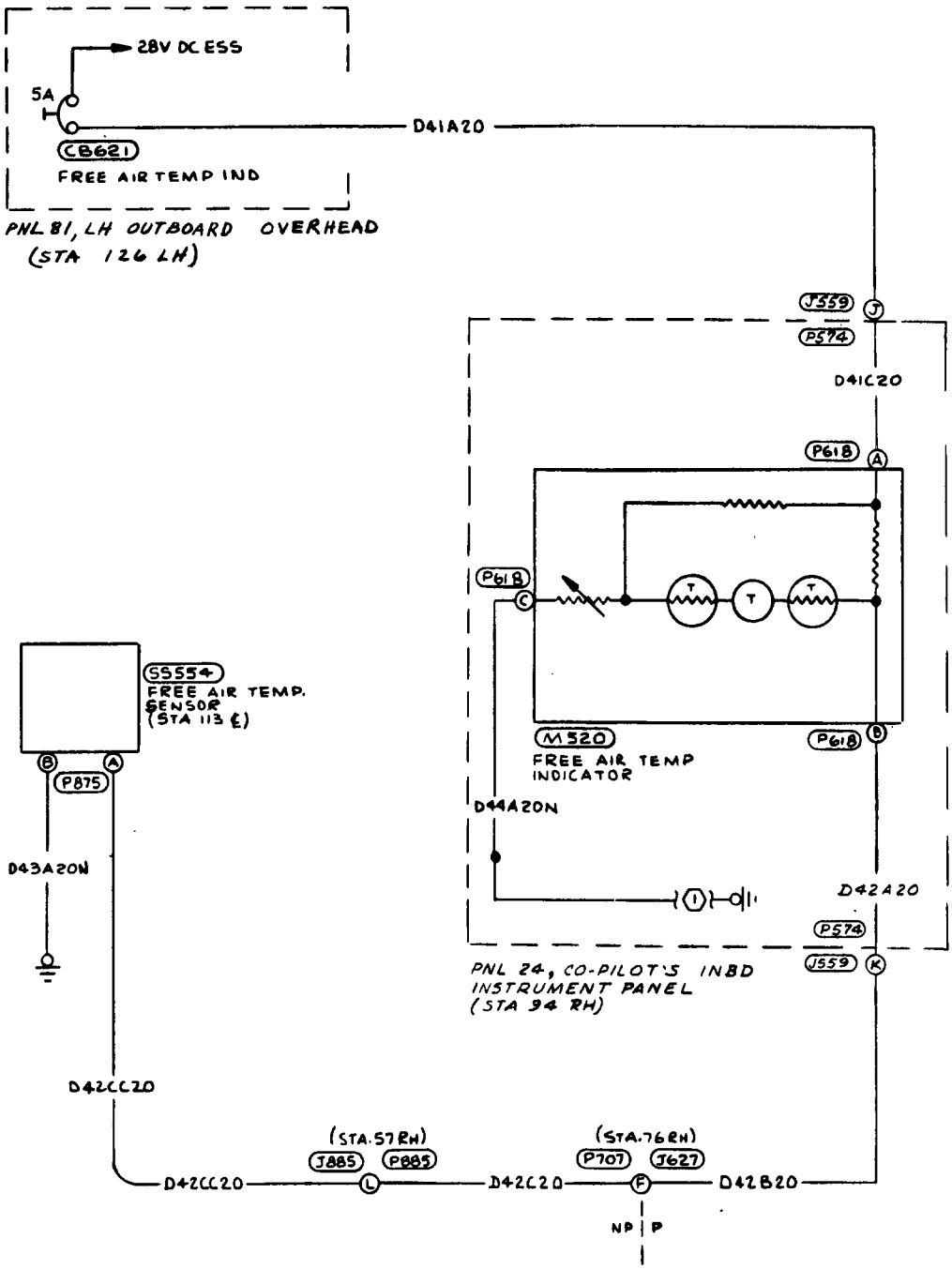

NOTES

1. FOR DETAIL GRD SEE D18.1; STANDBY COMPASS, PEDESTAL & OVERHEAD INDIRECT LTS SYSTEM

SHIP	THRU	BLOCK
EFFECTIVE ON		

J4.1

© COPYRIGHT, 1981 BY ROCKWELL INTERNATIONAL

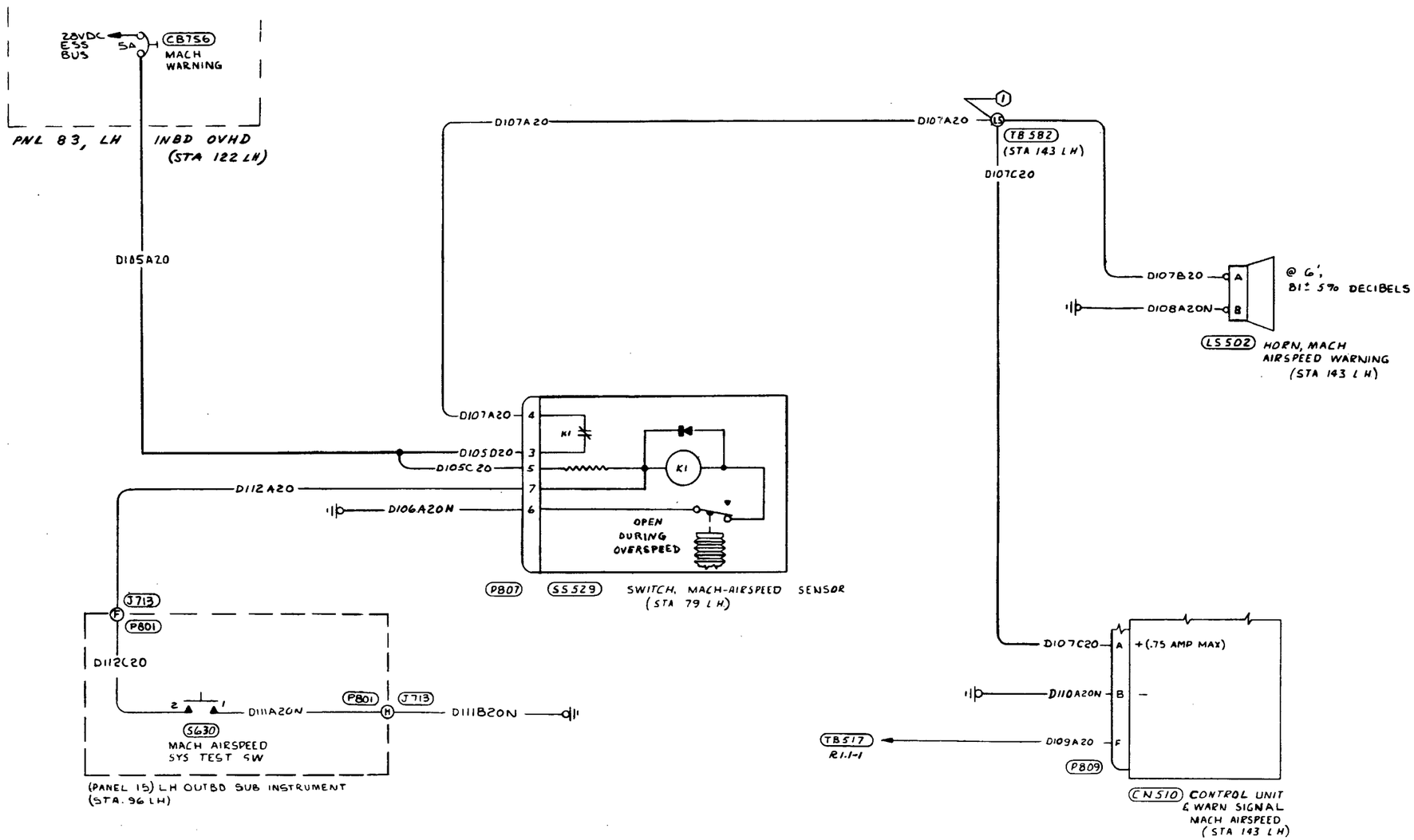

1 L6.1 HYDRAULIC PUMP SYS.

NOTES:

© COPYRIGHT, 1981 BY ROCKWELL INTERNATIONAL

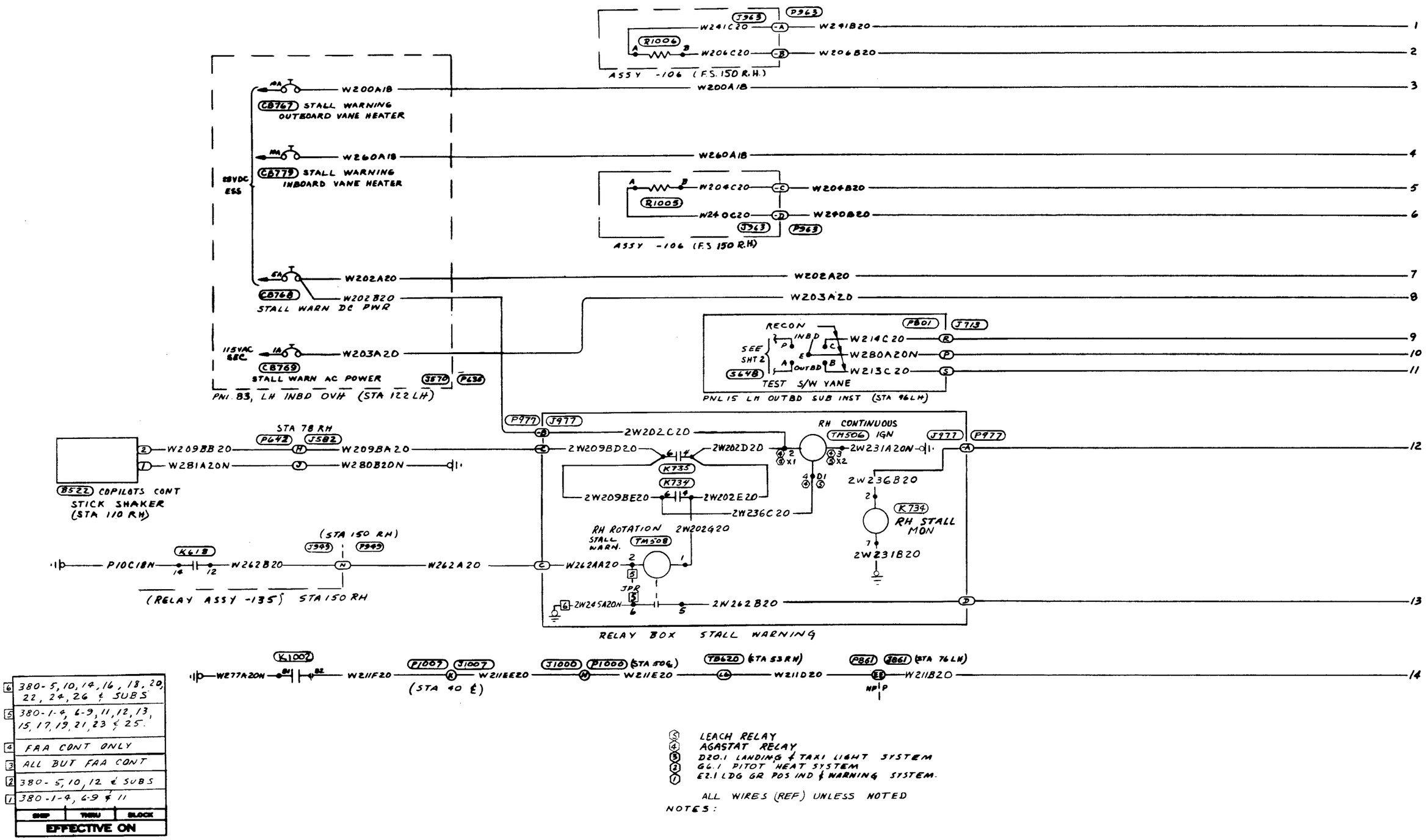

6	380-5, 10, 14, 16, 18, 20, 22, 24, 26 & SUBS
5	380-1-4, 6-9, 11, 12, 13, 15, 17, 19, 21, 23 & 25.
4	FAA CONT ONLY
3	ALL BUT FAA CONT
2	380-5, 10, 12 & SUBS
1	380-1-4, 6-9 & 11
SHIP	THRU BLOCK
EFFECTIVE ON	

(5) LEACH RELAY
(4) AGASTAT RELAY
(3) D20.1 LANDING & TAXI LIGHT SYSTEM
(2) G6.1 PITOT HEAT SYSTEM
(1) E2.1 LDG GR POS IND & WARNING SYSTEM.

ALL WIRES (REF) UNLESS NOTED

NOTES:

STALL WARNING SYSTEM (RH)
(Sheet 1 of 3)

© COPYRIGHT, 1981 BY ROCKWELL INTERNATIONAL

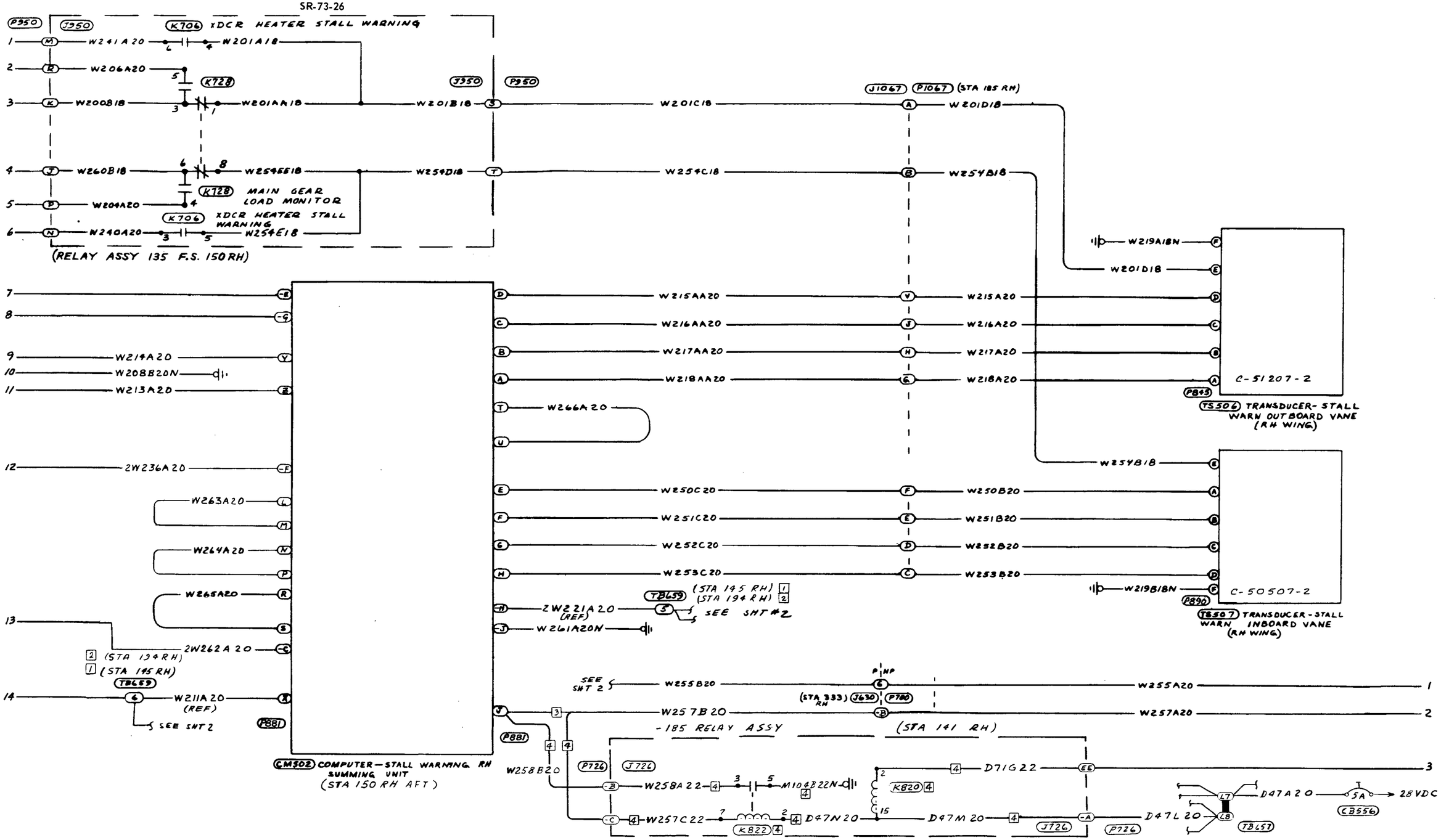

STALL WARNING SYSTEM (RH)
(Sheet 2 of 3)

© COPYRIGHT, 1981 BY ROCKWELL INTERNATIONAL

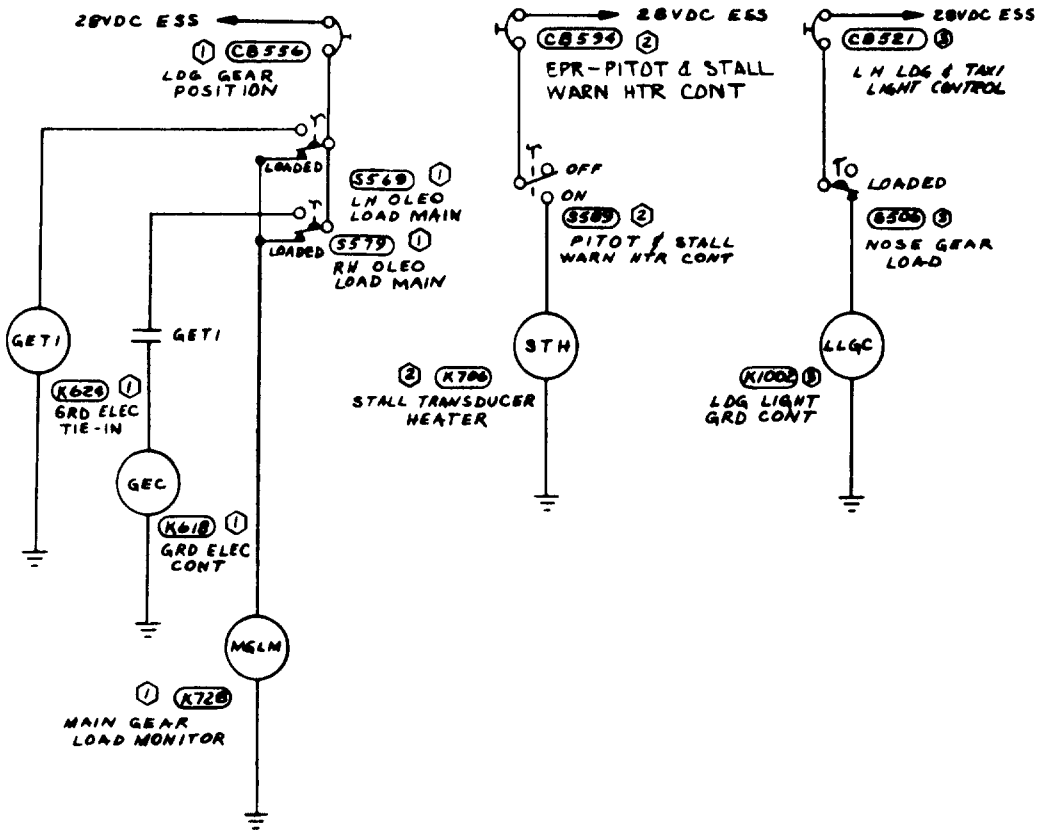

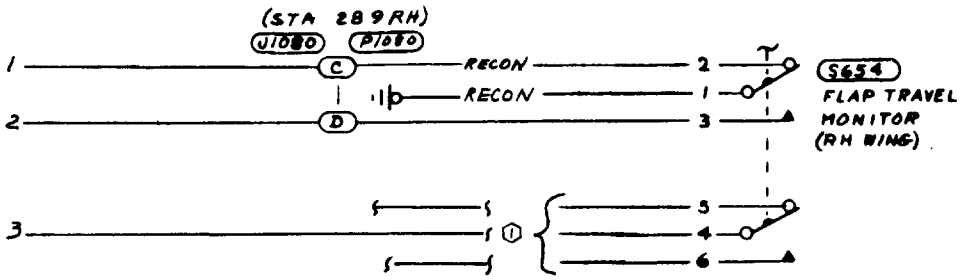

STALL WARNING SYSTEM (RH)
(Sheet 3 of 3)

© COPYRIGHT, 1981 BY ROCKWELL INTERNATIONAL

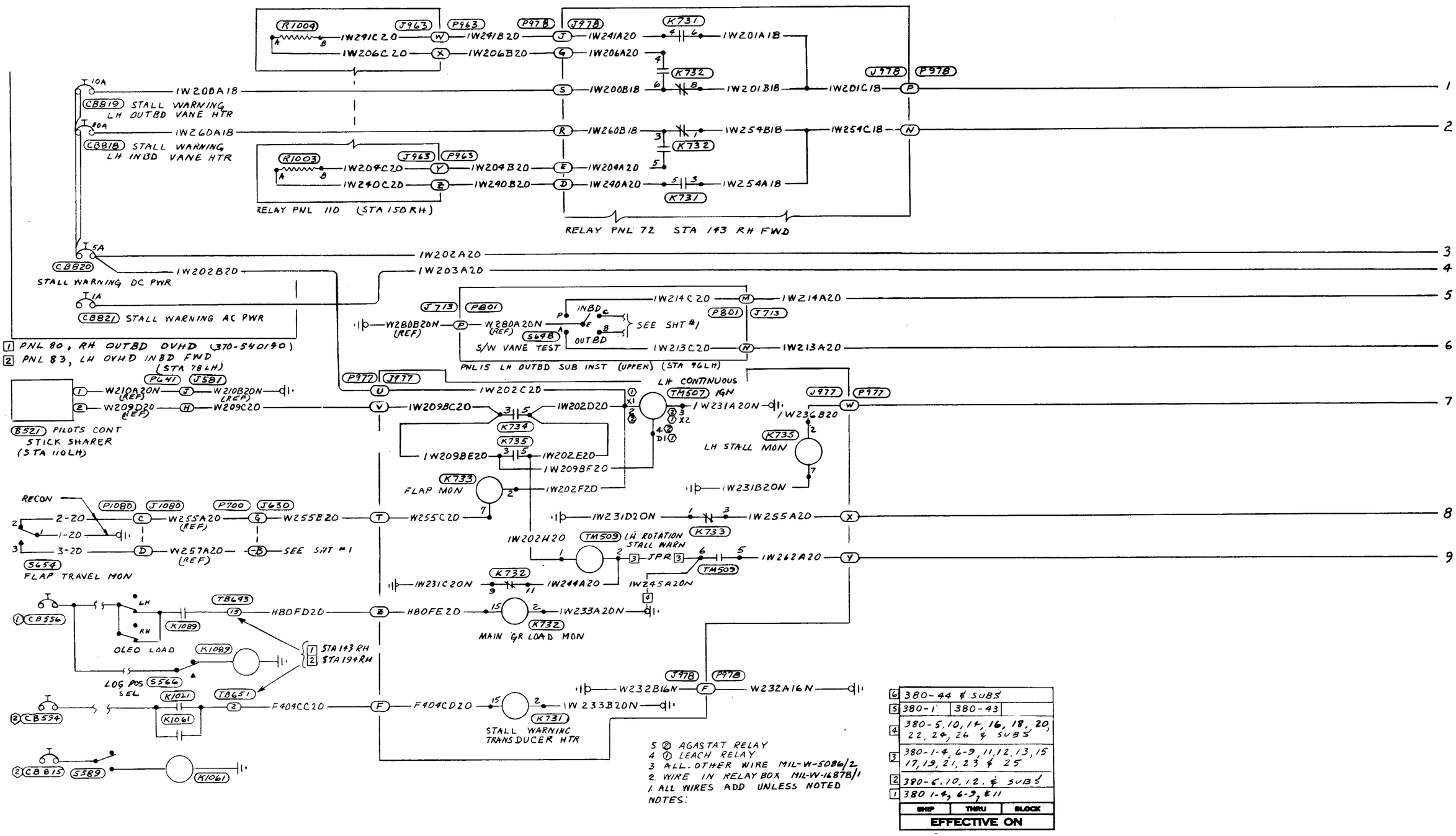

STALL WARNING SYSTEM (LH)
(Sheet 1 of 3)

© COPYRIGHT, 1981 BY ROCKWELL INTERNATIONAL

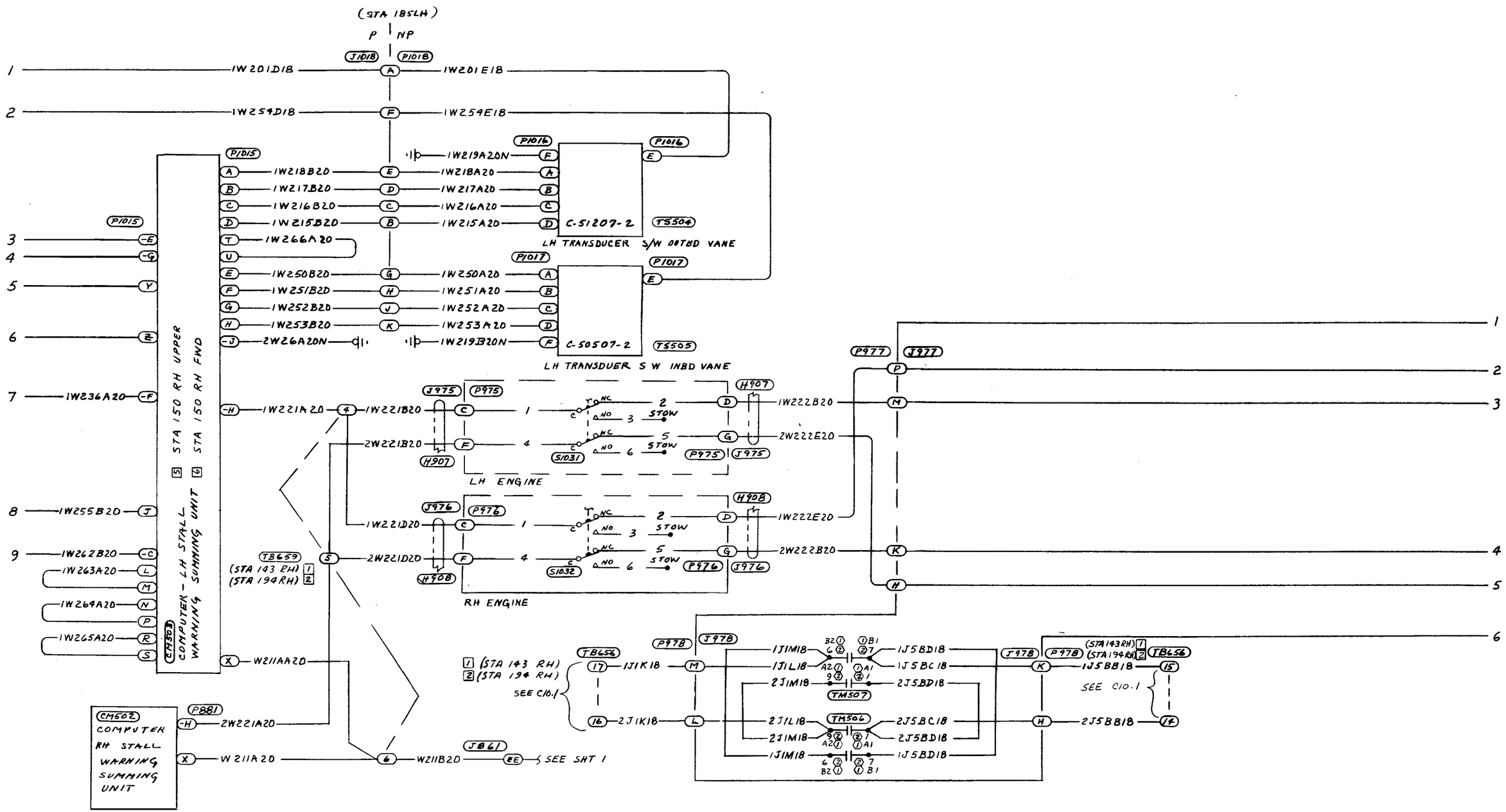

STALL WARNING SYSTEM (LH)
(Sheet 2 of 3)

© COPYRIGHT, 1981 BY ROCKWELL INTERNATIONAL

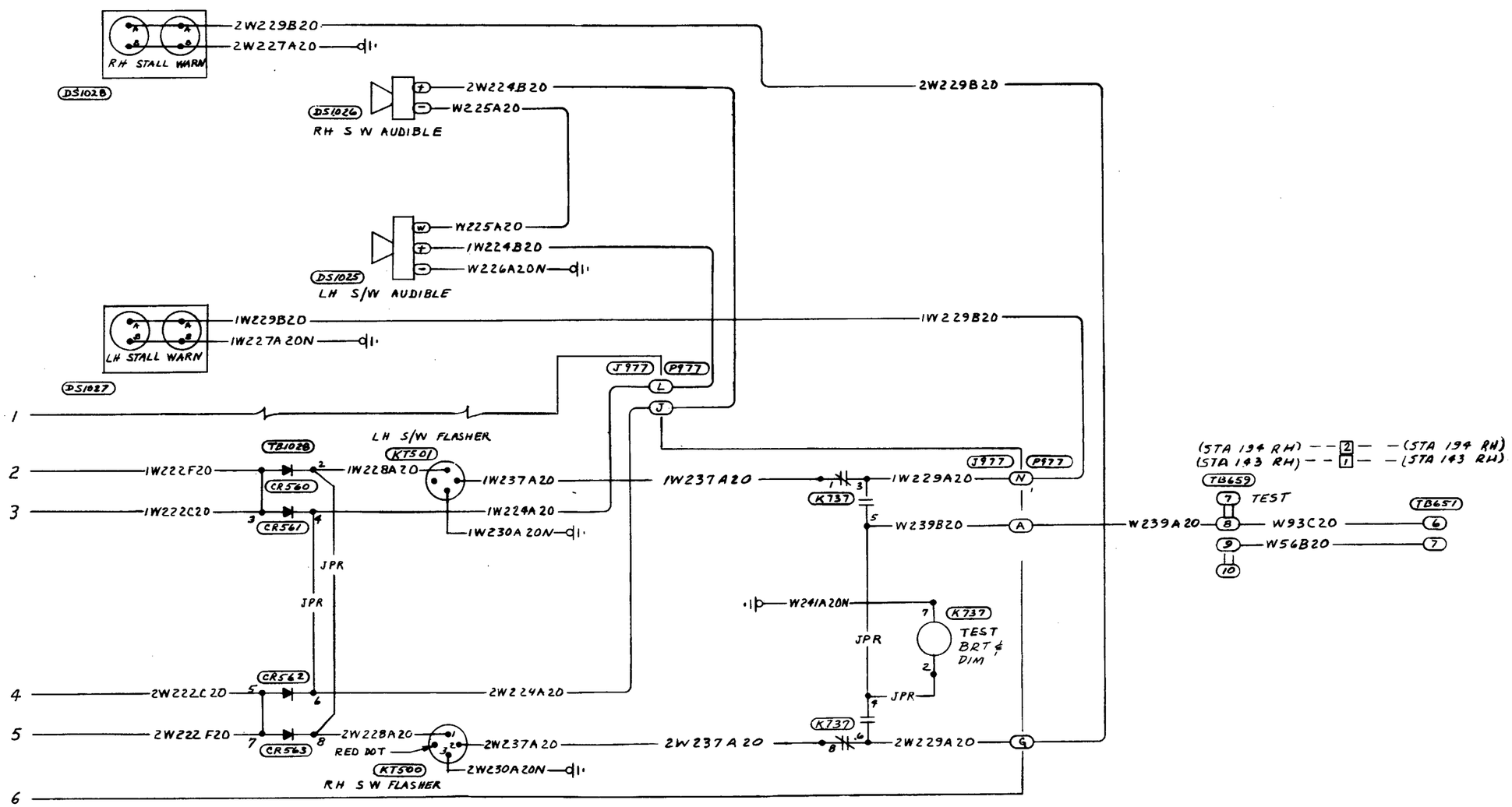

STALL WARNING SYSTEM (LH)
(Sheet 3 of 3)

© COPYRIGHT, 1981 BY ROCKWELL INTERNATIONAL

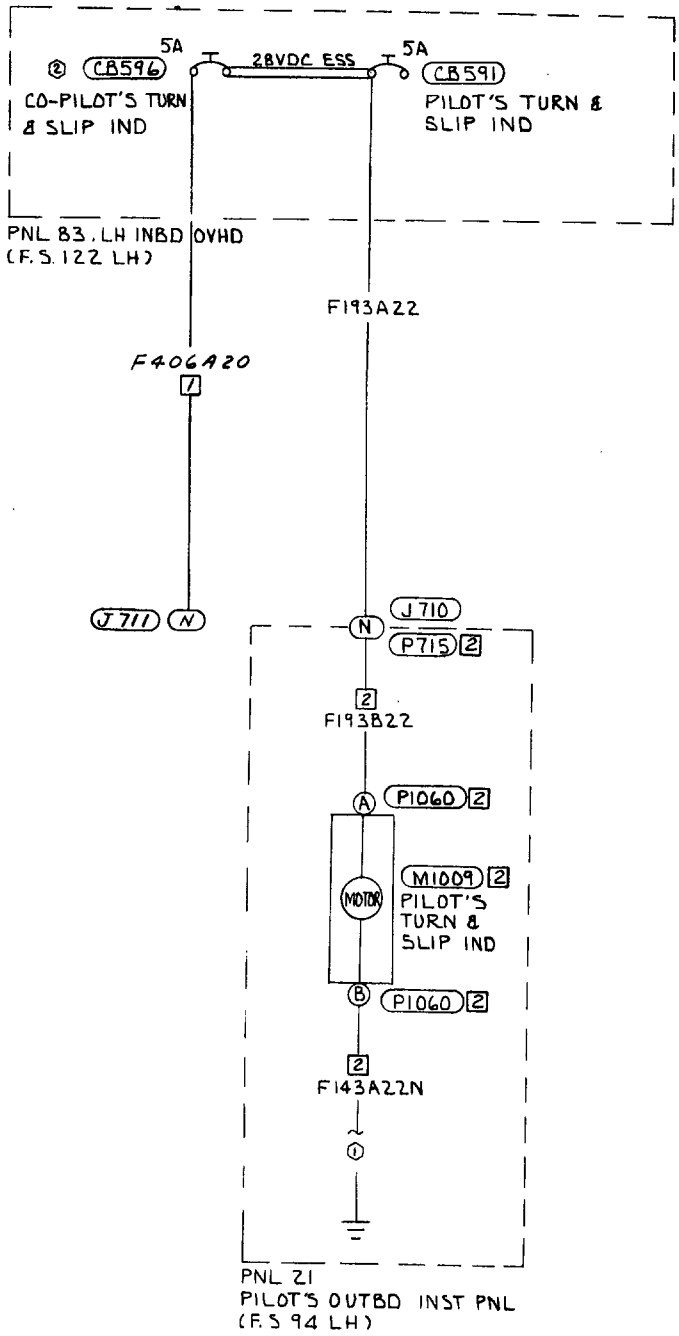

② 2. PWR PROVISIONS ONLY
① 1. FOR DETAIL GRD SEE D18.1, STDBY COMPASS, PEDESTAL & OVHD INDIRECT LTS SYS

NOTES:

2	380-1	380-40	
7	380-41	& SUBS	
SHIP		THRU	BLOCK
EFFECTIVE ON			

J1.1

© COPYRIGHT, 1981 BY ROCKWELL INTERNATIONAL

CHAPTER 49

AIRBORNE AUXILIARY POWER

EFFECTIVITY

1. S/N 380-5, -10, -12 THRU -47
2. AIRPLANES NOT CHANGED BY S/L 83-12
3. AIRPLANES CHANGED BY S/L 83-12

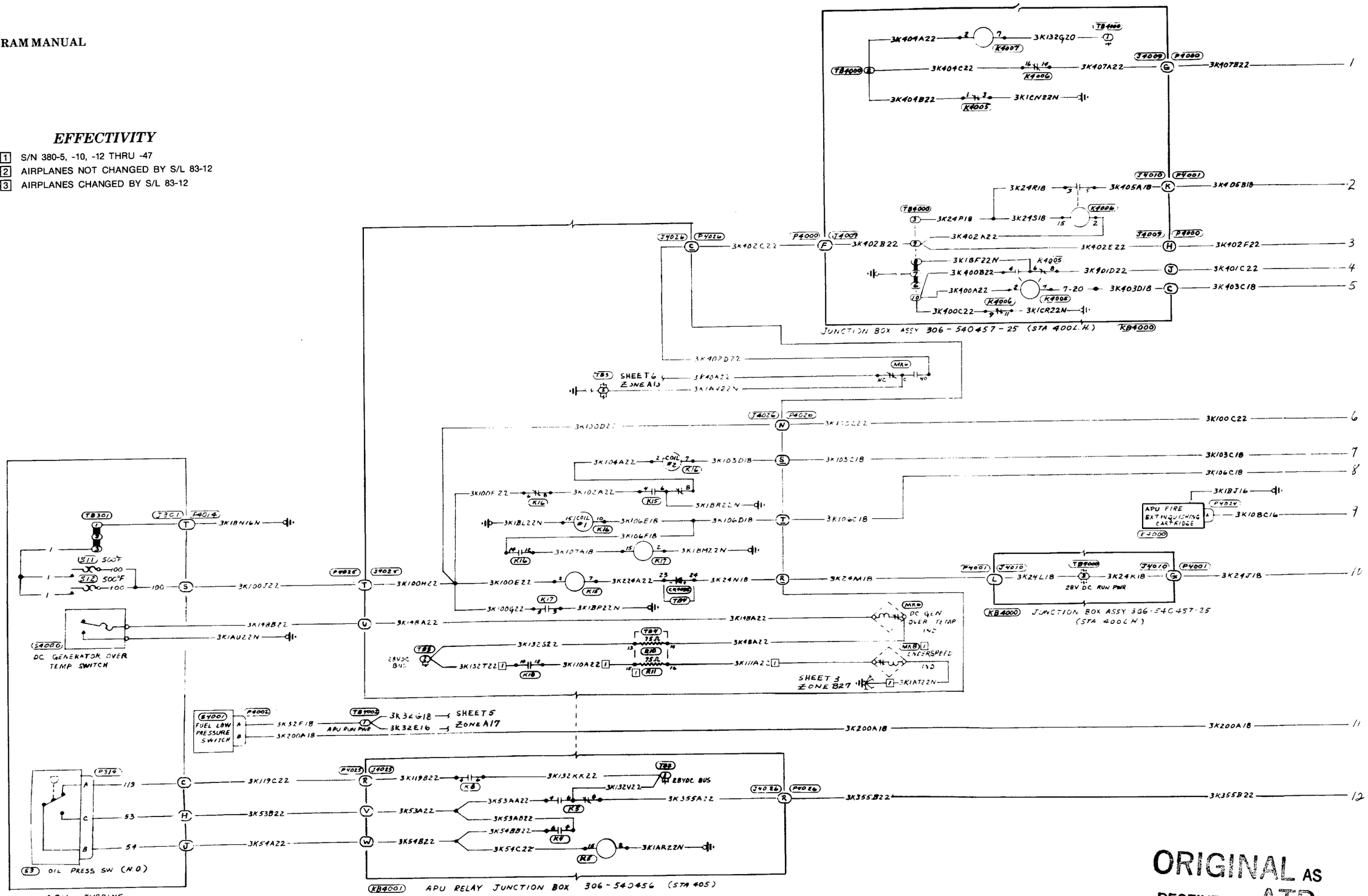

ORIGINAL AS RECEIVED BY ATP

© COPYRIGHT, 1987 BY SABRELINER CORPORATION

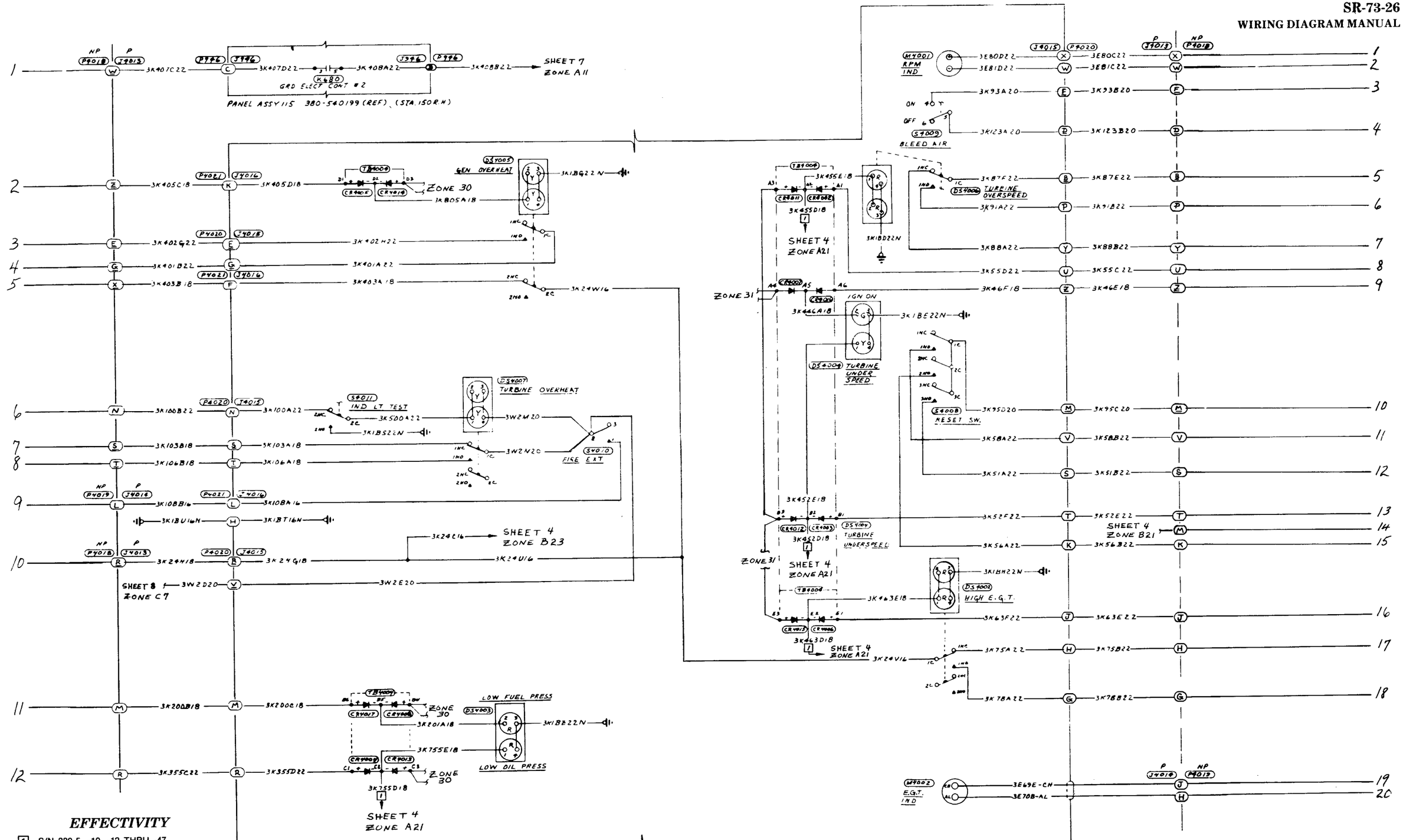

EFFECTIVITY

1. S/N 380-5, -10, -12 THRU -47
2. AIRPLANES NOT CHANGED BY S/L 83-12
3. AIRPLANES CHANGED BY S/L 83-12

© COPYRIGHT, 1988 BY SABRELINER CORPORATION

AUXILIARY POWER UNIT SYSTEM
S/N 380-5, -10, -12 & Subs
(Sheet 2 of 9)

32	31	30	29	B10

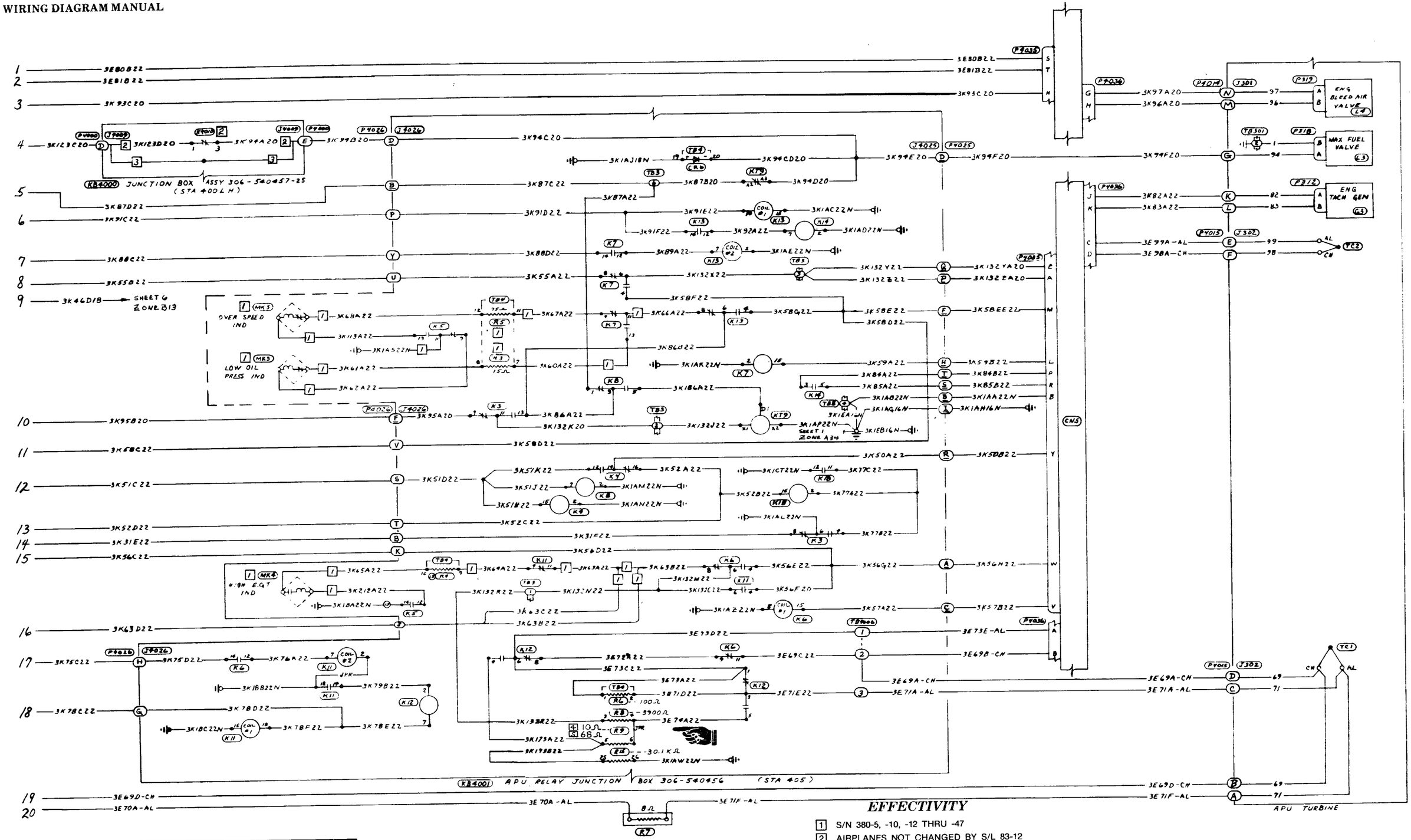

© COPYRIGHT, 1988 BY SABRELINER CORPORATION

AUXILIARY POWER UNIT SYSTEM
S/N 380-5, -10, -12 & Subs
(Sheet 3 of 9)

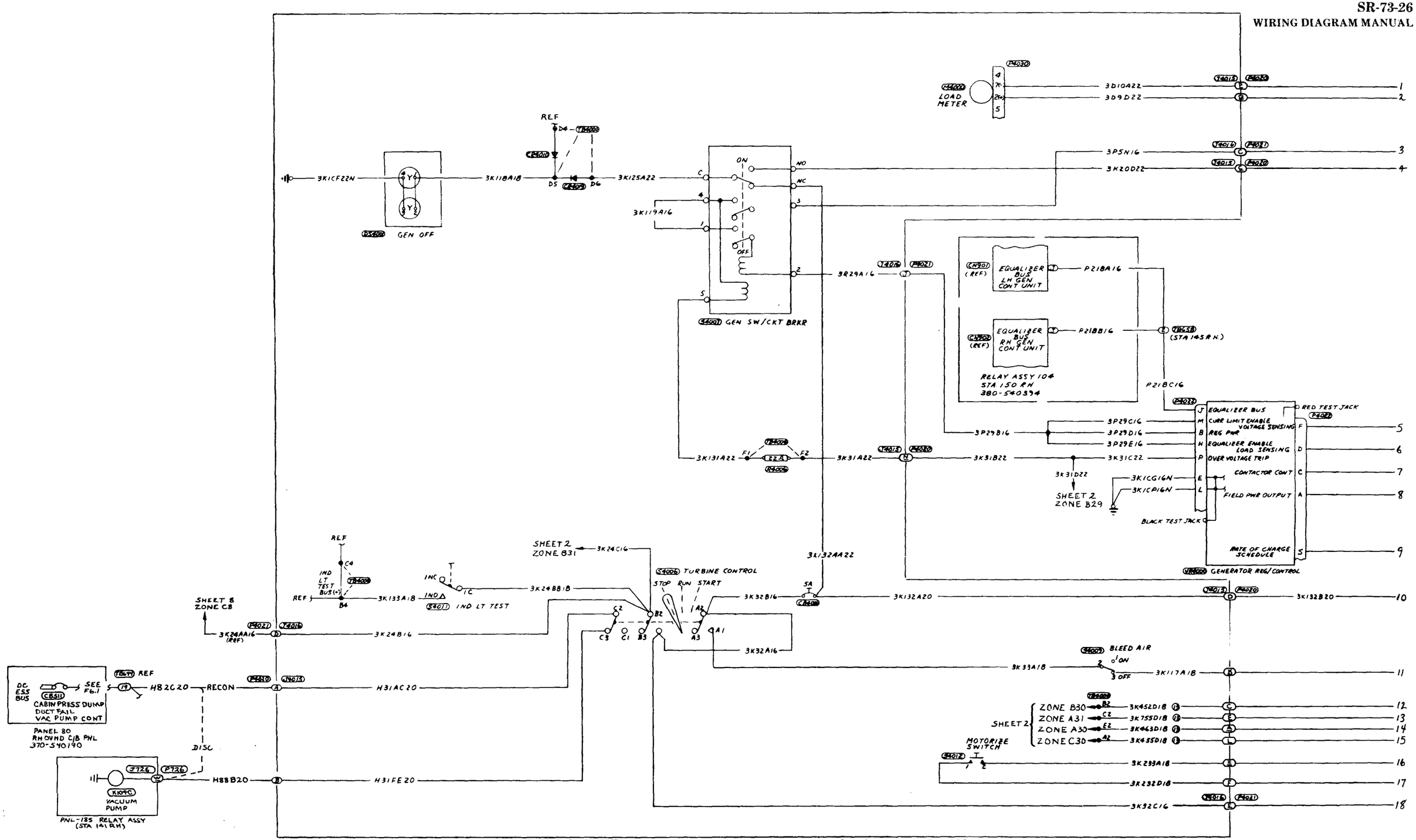

EFFECTIVITY

1 S/N 380-5, -10, -12 THRU -47
2 AIRPLANES NOT CHANGED BY S/L 83-12
3 AIRPLANES CHANGED BY S/L 83-12

© COPYRIGHT, 1988 BY SABRELINER CORPORATION

AUXILIARY POWER UNIT SYSTEM
S/N 380-5, -10, -12 & Subs
(Sheet 4 of 9)

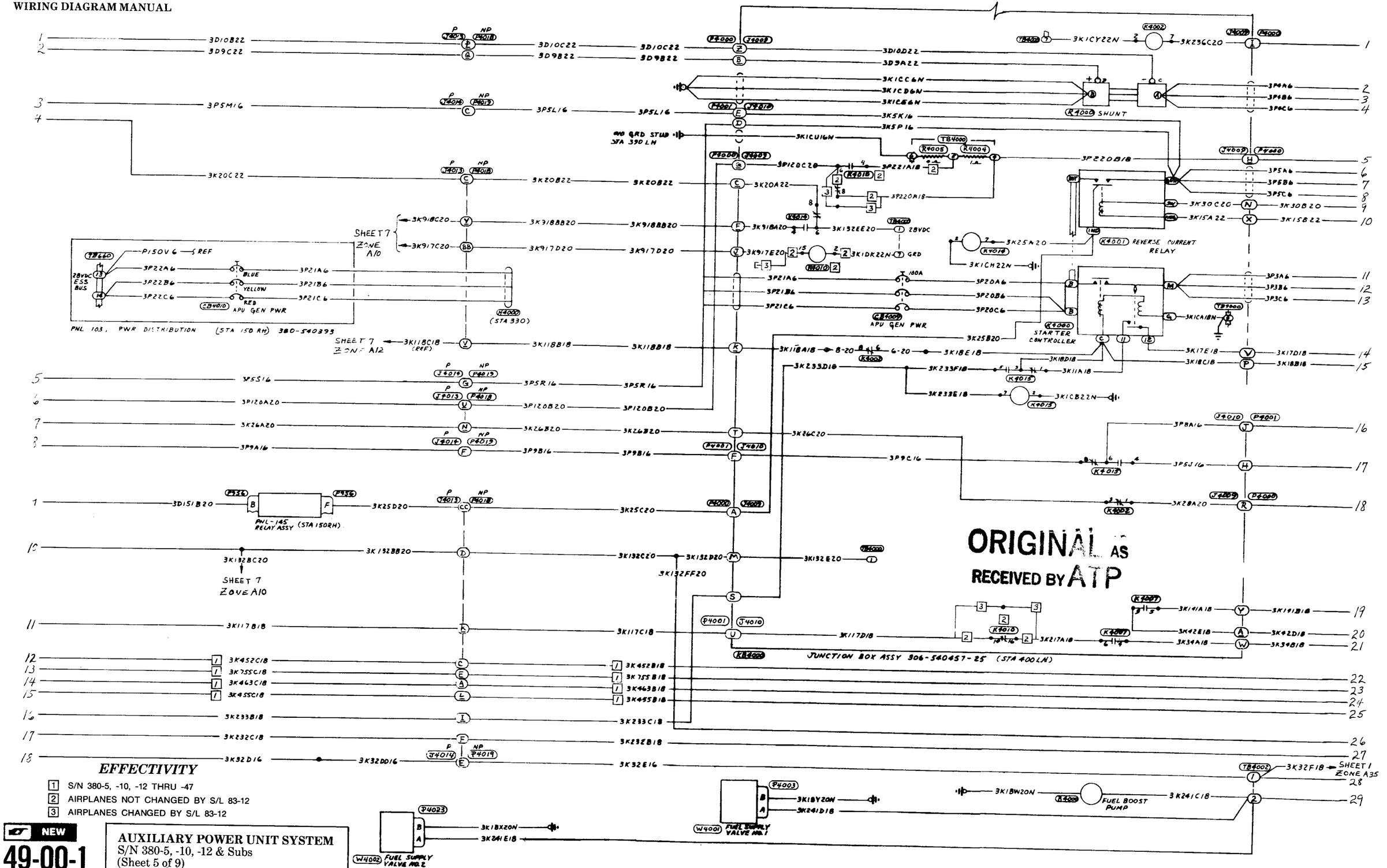

ORIGINAL AS RECEIVED BY ATP

EFFECTIVITY

1. S/N 380-5, -10, -12 THRU -47
2. AIRPLANES NOT CHANGED BY S/L 83-12
3. AIRPLANES CHANGED BY S/L 83-12

NEW

AUXILIARY POWER UNIT SYSTEM
S/N 380-5, -10, -12 & Subs
(Sheet 5 of 9)

© COPYRIGHT, 1987 BY SABRELINER CORPORATION

EFFECTIVITY

1. S/N 380-5, -10, -12 THRU -47
2. AIRPLANES NOT CHANGED BY S/L 83-12
3. AIRPLANES CHANGED BY S/L 83-12

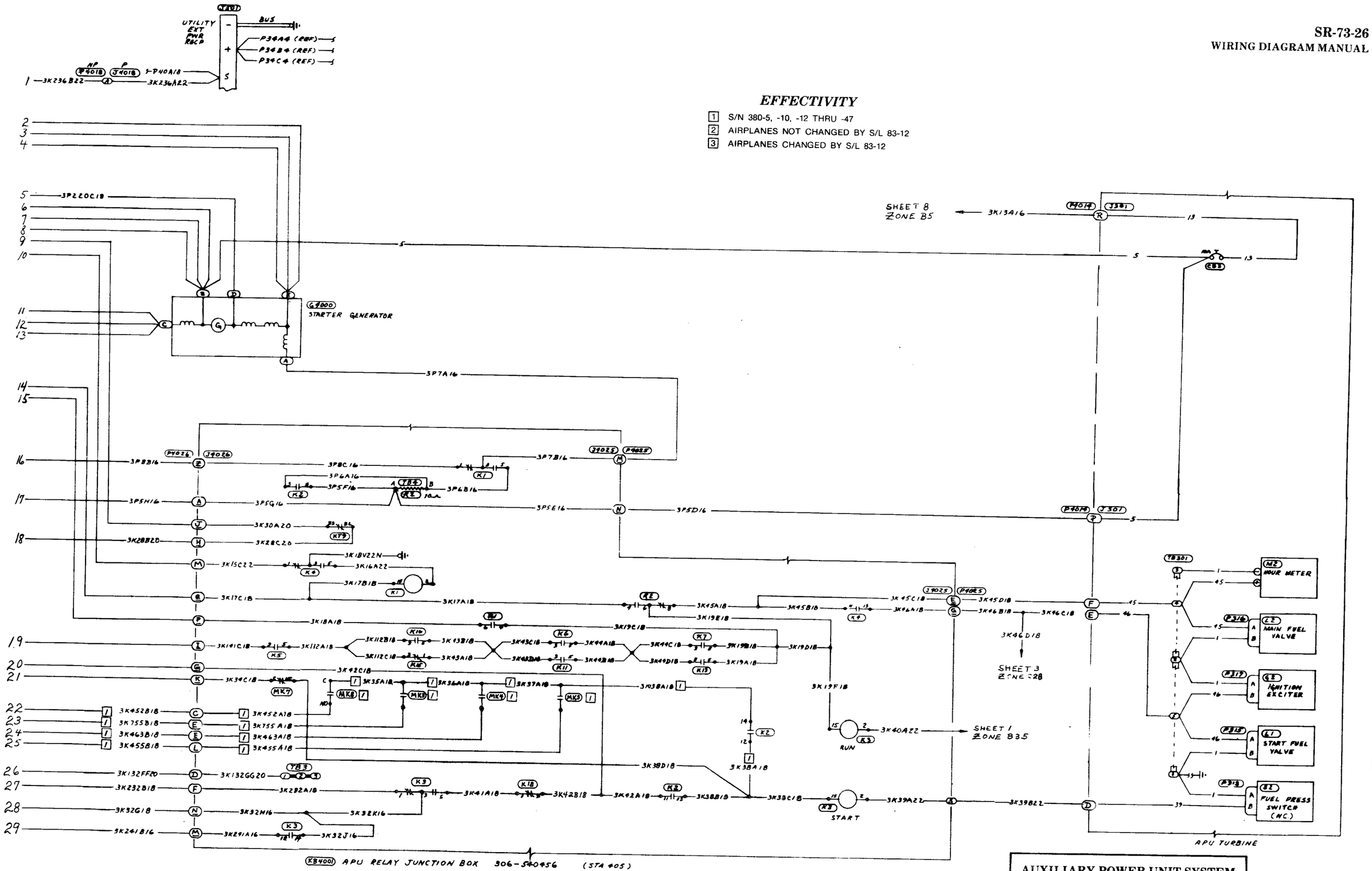

© COPYRIGHT, 1988 BY SABRELINER CORPORATION

16	15	14	13	B10

AUXILIARY POWER UNIT SYSTEM
S/N 380-5, -10, -12 & Subs
(Sheet 6 of 9)

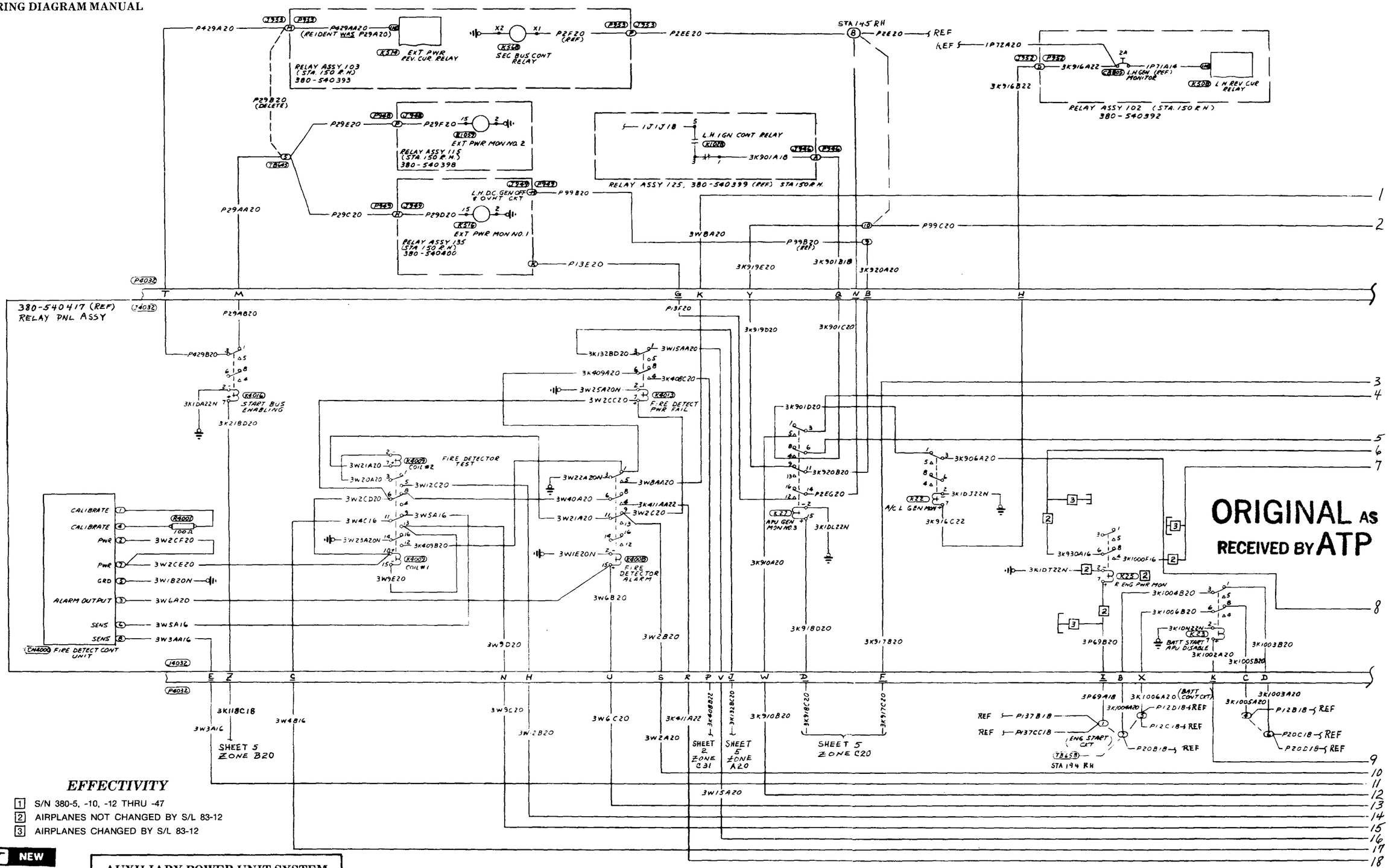

EFFECTIVITY

1. S/N 380-5, -10, -12 THRU -47
2. AIRPLANES NOT CHANGED BY S/L 83-12
3. AIRPLANES CHANGED BY S/L 83-12

NEW

AUXILIARY POWER UNIT SYSTEM
S/N 380-5, -10, -12 & Subs
(Sheet 7 of 9)

© COPYRIGHT, 1987 BY SABRELINER CORPORATION

B10	12	11	9	8

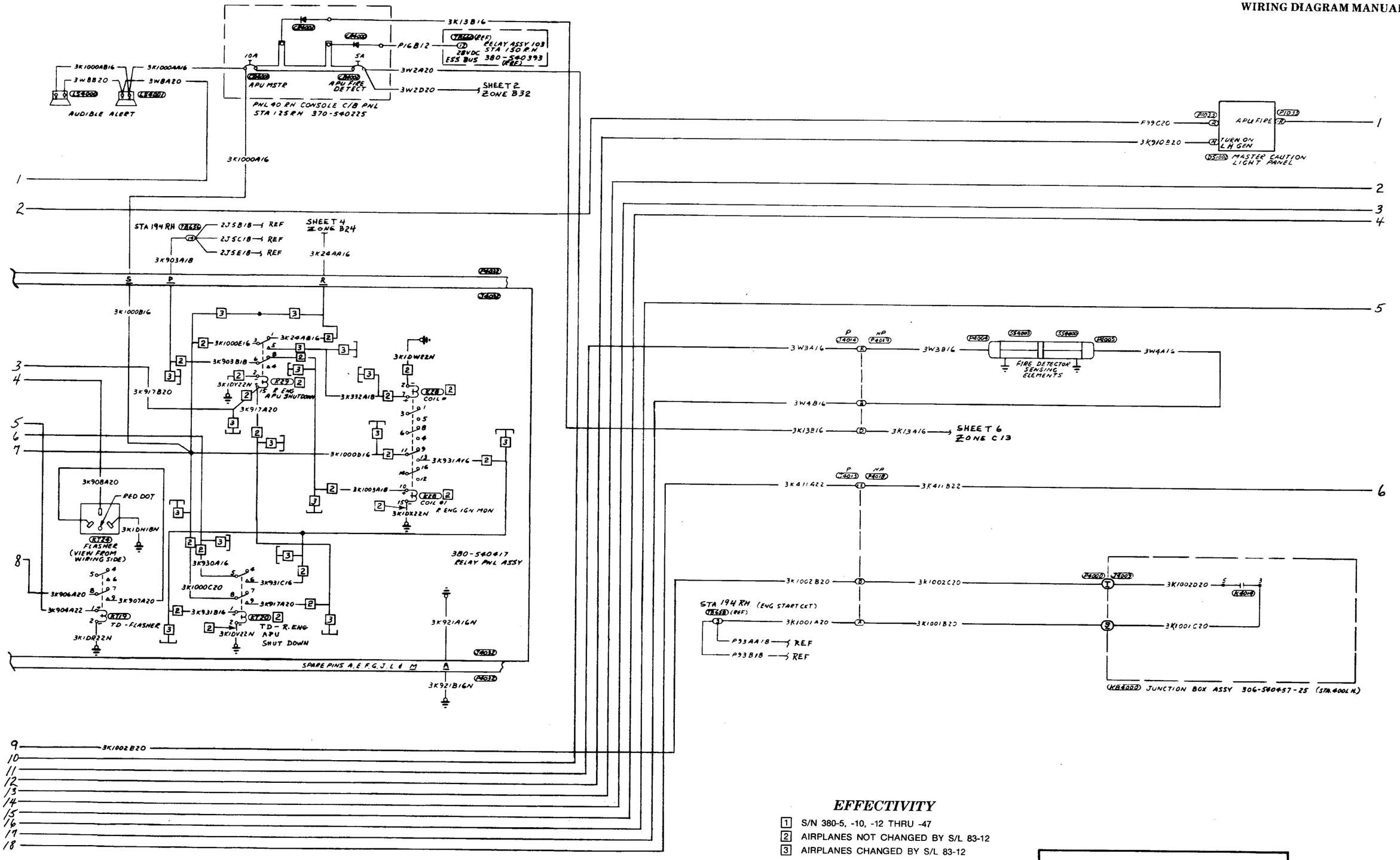

EFFECTIVITY

1. S/N 380-5, -10, -12 THRU -47
2. AIRPLANES NOT CHANGED BY S/L 83-12
3. AIRPLANES CHANGED BY S/L 83-12

© COPYRIGHT, 1988 BY SABRELINER CORPORATION

AUXILIARY POWER UNIT SYSTEM
S/N 380-5, -10, -12 & Subs
(Sheet 8 of 9)

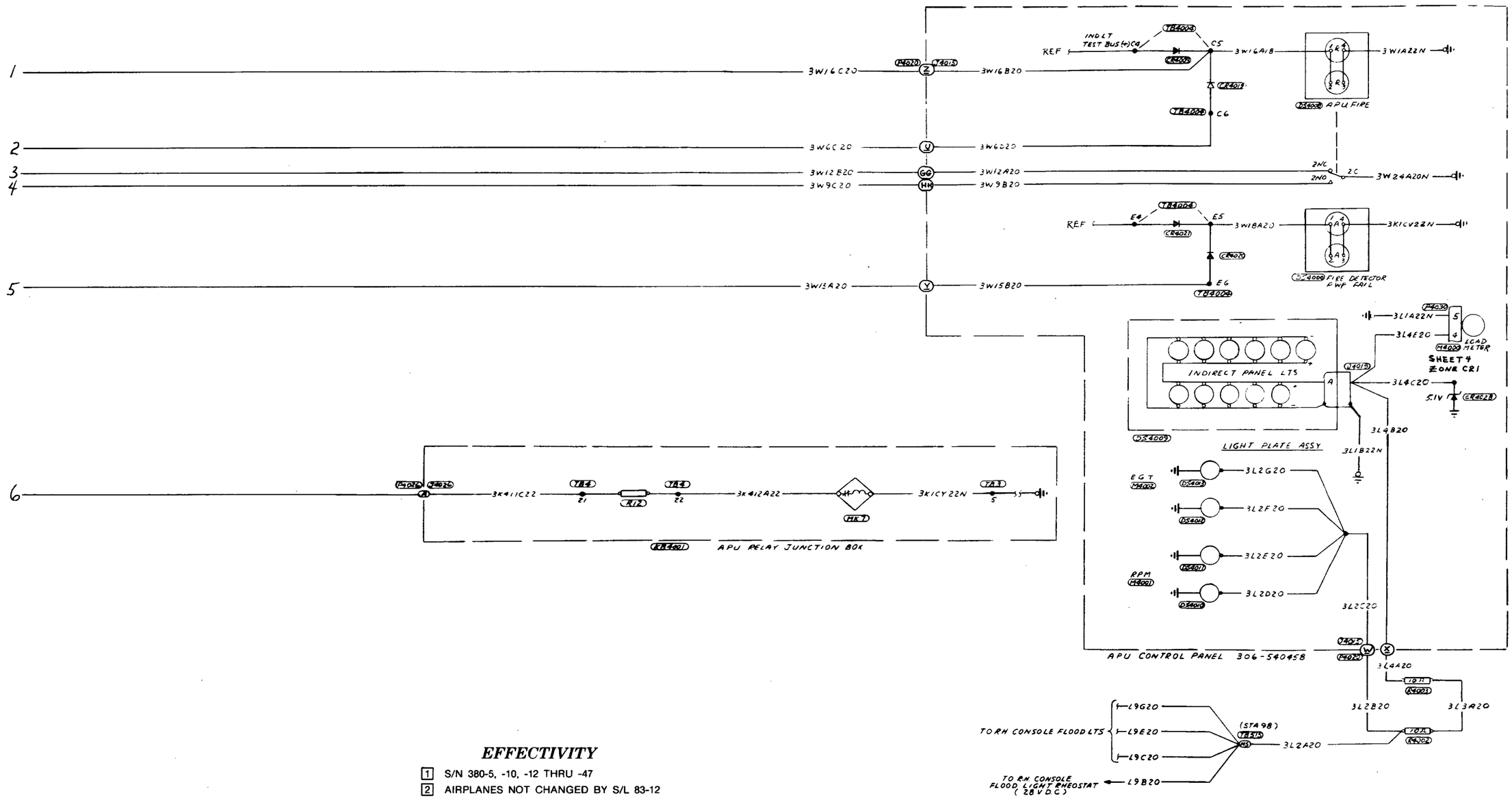

EFFECTIVITY

1 S/N 380-5, -10, -12 THRU -47
2 AIRPLANES NOT CHANGED BY S/L 83-12
3 AIRPLANES CHANGED BY S/L 83-12

© COPYRIGHT, 1988 BY SABRELINER CORPORATION

AUXILIARY POWER UNIT SYSTEM
S/N 380-5, -10, -12 & Subs
(Sheet 9 of 9)

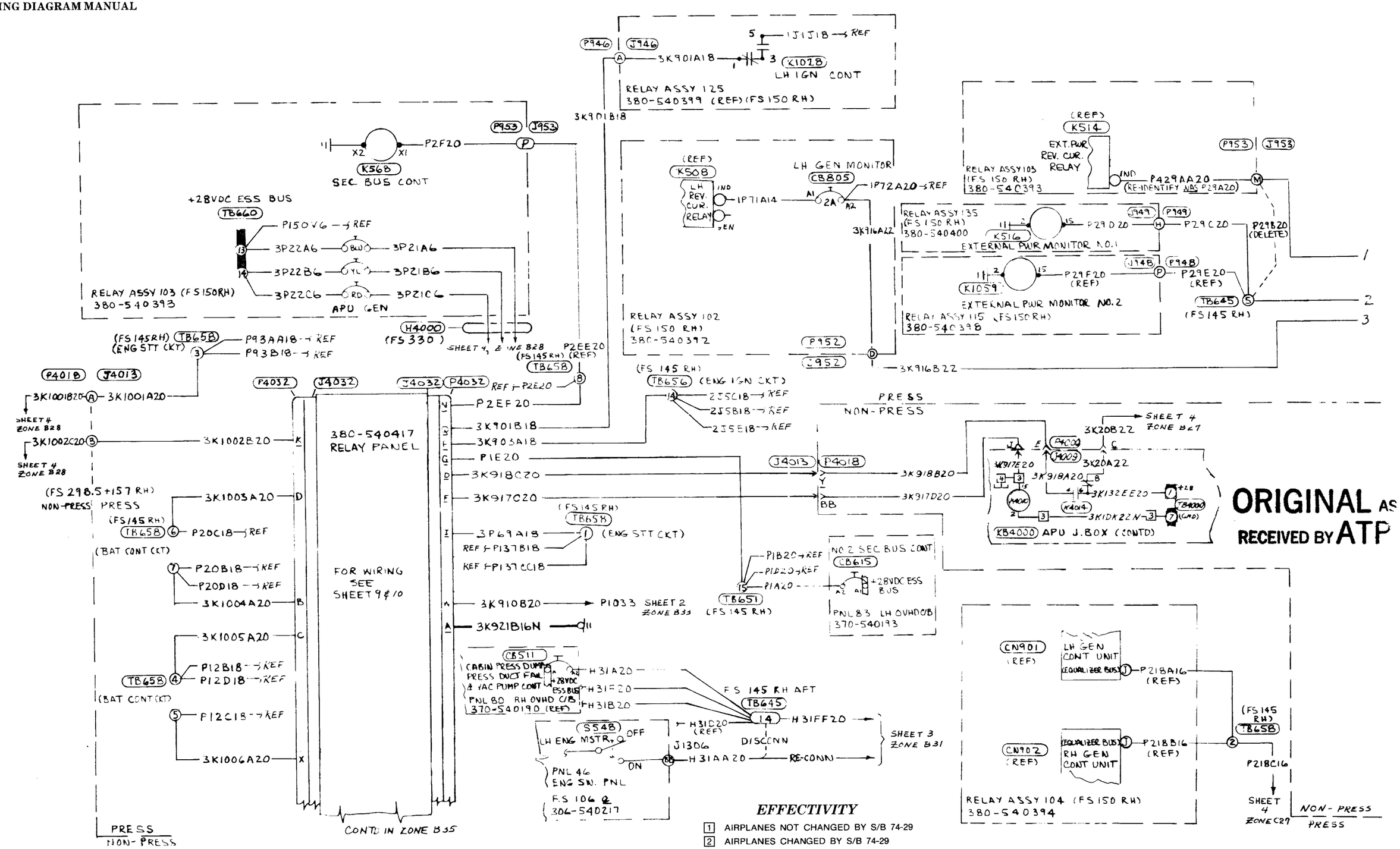

EFFECTIVITY

1. AIRPLANES NOT CHANGED BY S/B 74-29
2. AIRPLANES CHANGED BY S/B 74-29
3. AIRPLANES NOT CHANGED BY S/L 83-12
4. AIRPLANES CHANGED BY S/L 83-12

NEW

AUXILIARY POWER UNIT SYSTEM
S/N 380-1 thru -4, -6 thru -9 & -11
(Sheet 1 of 10)

© COPYRIGHT, 1987 BY SABRELINER CORPORATION

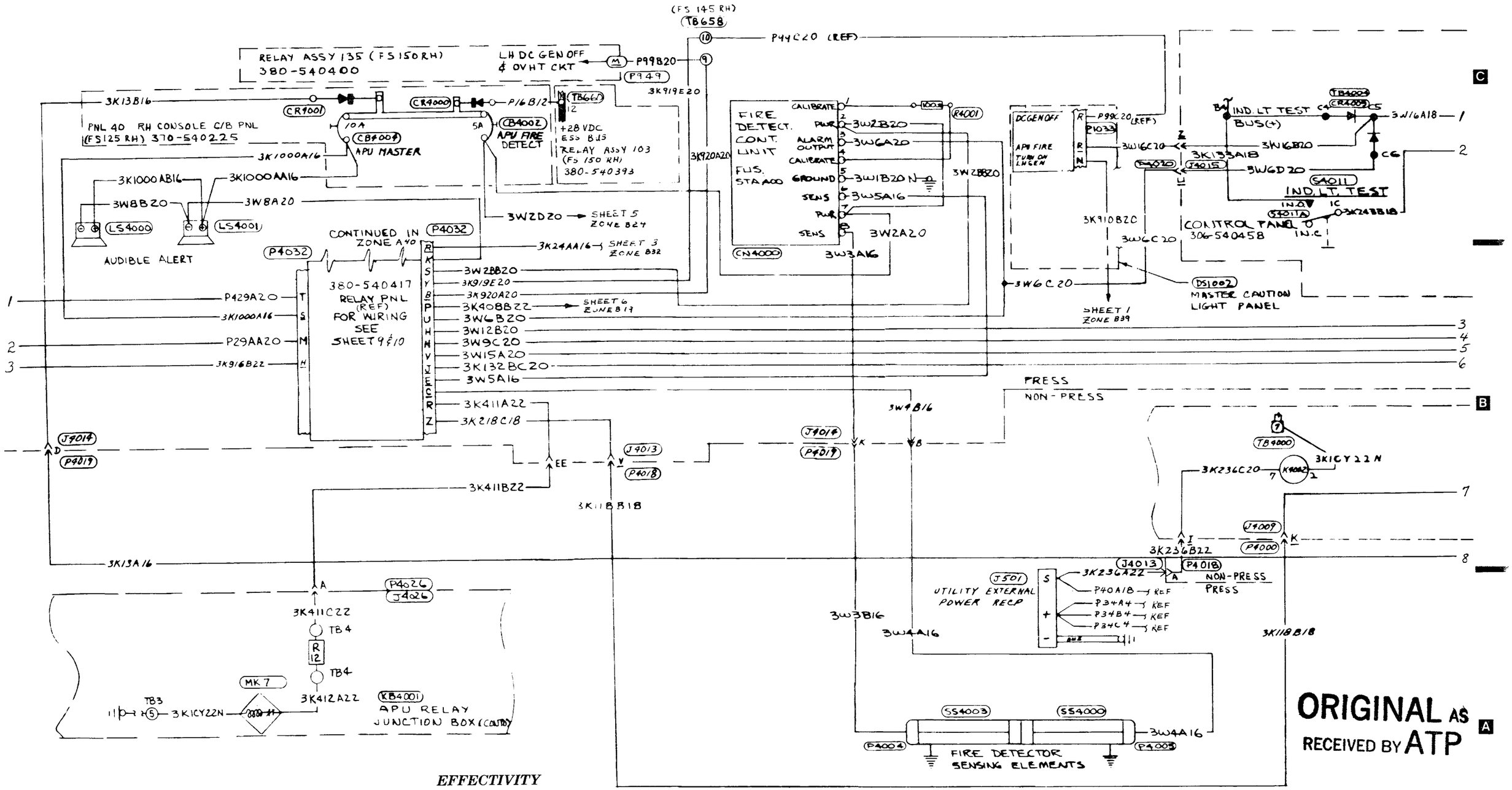

ORIGINAL AS RECEIVED BY ATP

EFFECTIVITY

1. AIRPLANES NOT CHANGED BY S/B 74-29
2. AIRPLANES CHANGED BY S/B 74-29
3. AIRPLANES NOT CHANGED BY S/L 83-12
4. AIRPLANES CHANGED BY S/L 83-12

AUXILIARY POWER UNIT SYSTEM
S/N 380-1 thru -4, -6 thru -9 & -11
(Sheet 2 of 10)

NEW

© COPYRIGHT, 1987 BY SABRELINER CORPORATION

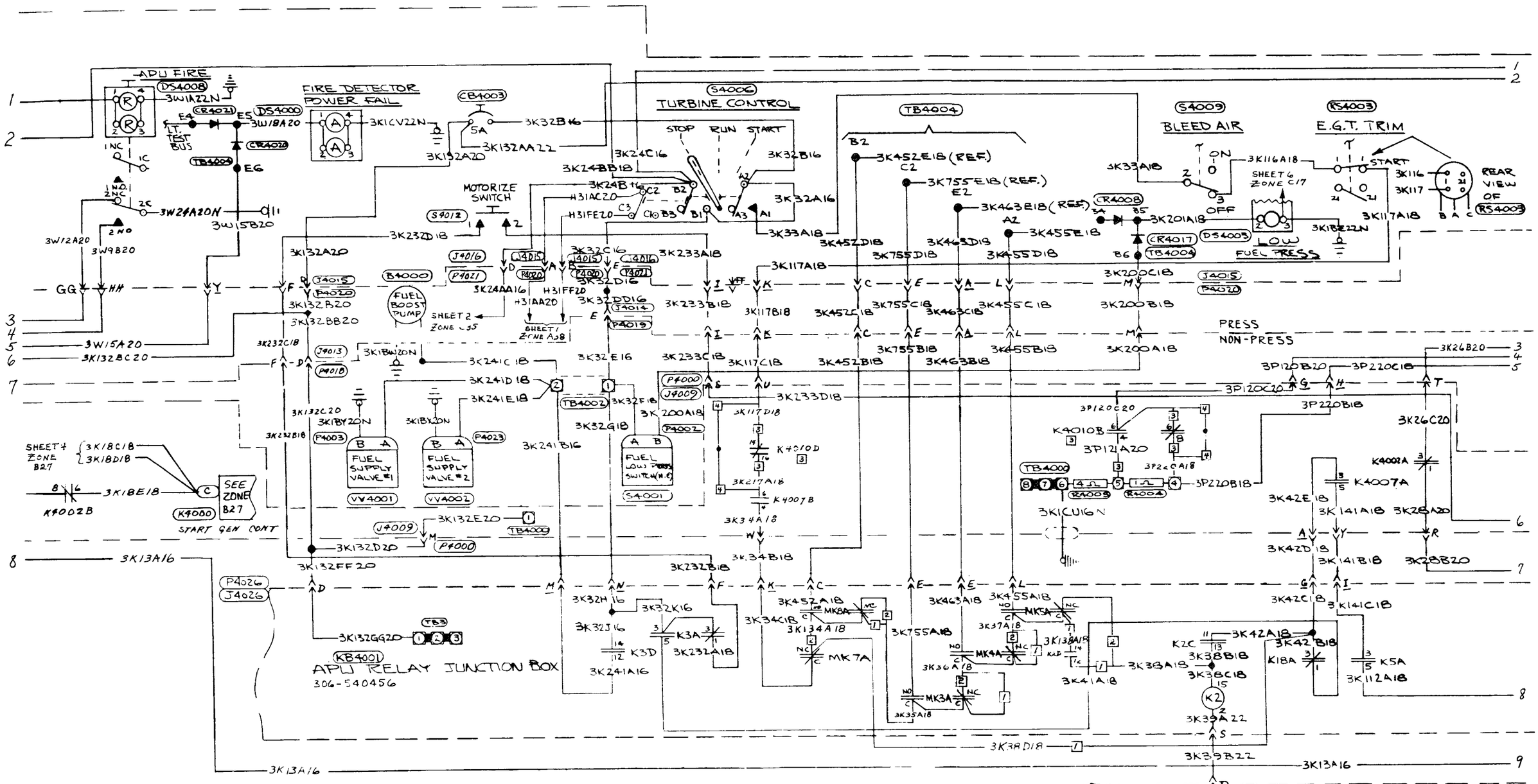

EFFECTIVITY

1 AIRPLANES NOT CHANGED BY S/B 74-29
2 AIRPLANES CHANGED BY S/B 74-29
3 AIRPLANES NOT CHANGED BY S/L 83-12
4 AIRPLANES CHANGED BY S/L 83-12

ORIGINAL AS RECEIVED BY ATP

© COPYRIGHT, 1987 BY SABRELINER CORPORATION

NEW

AUXILIARY POWER UNIT SYSTEM
S/N 380-1 thru -4, -6 thru -9 & -11
(Sheet 3 of 10)

EFFECTIVITY

1 AIRPLANES NOT CHANGED BY S/B 74-29
2 AIRPLANES CHANGED BY S/B 74-29
3 AIRPLANES NOT CHANGED BY S/L 83-12
4 AIRPLANES CHANGED BY S/L 83-12

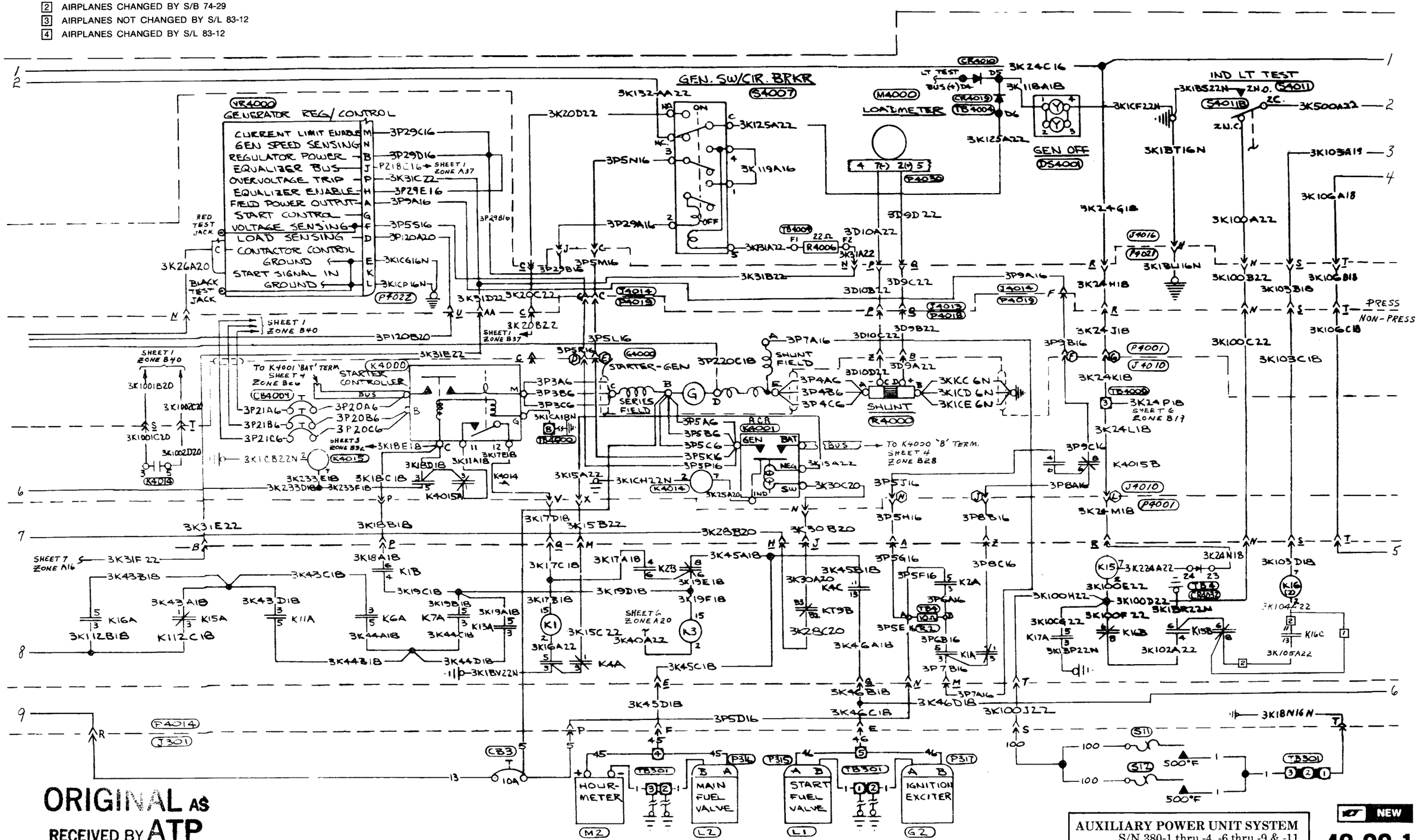

© COPYRIGHT, 1987 BY SABRELINER CORPORATION

AUXILIARY POWER UNIT SYSTEM
S/N 380-1 thru -4, -6 thru -9 & -11
(Sheet 4 of 10)

NEW

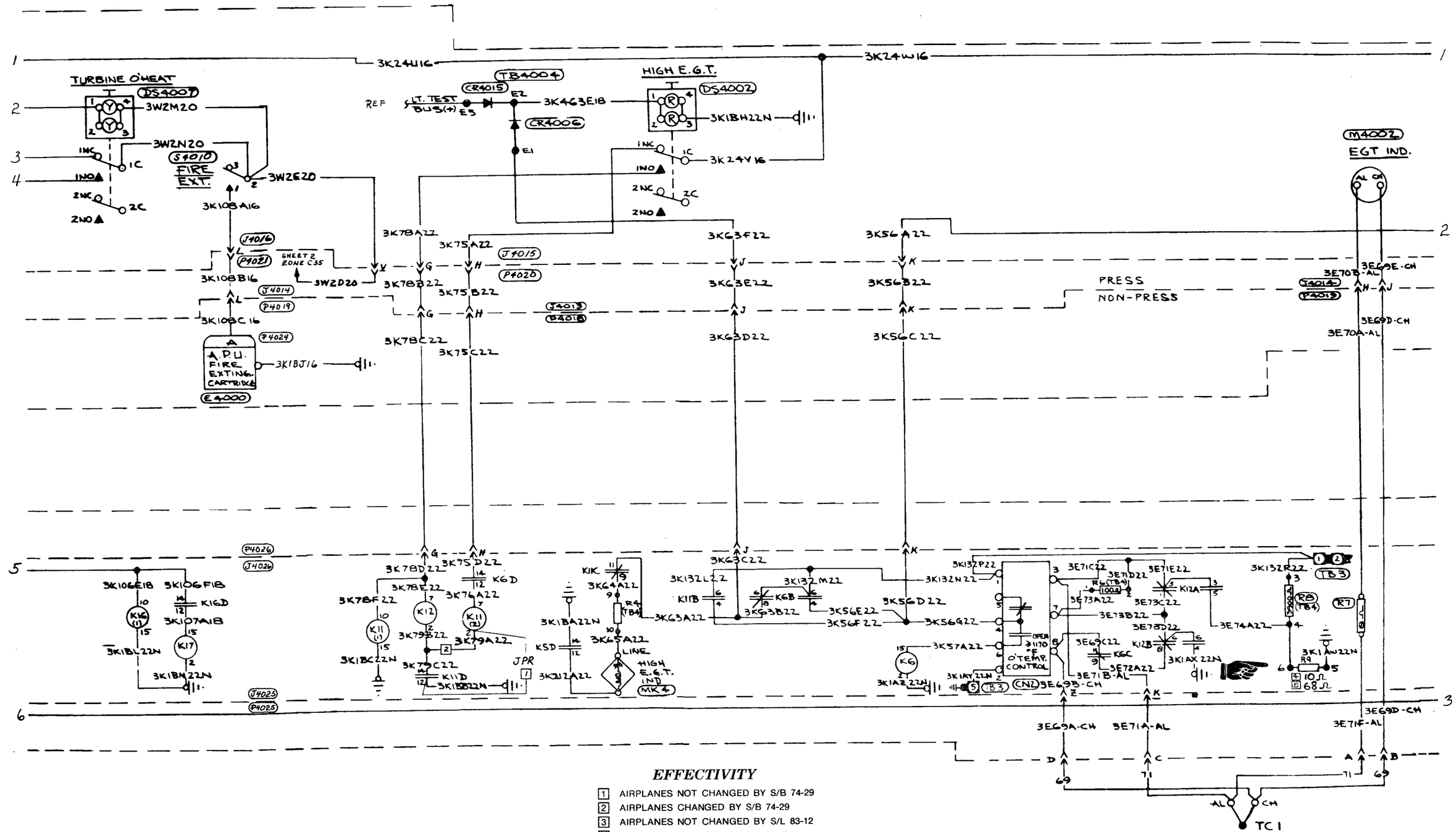

EFFECTIVITY

1. AIRPLANES NOT CHANGED BY S/B 74-29
2. AIRPLANES CHANGED BY S/B 74-29
3. AIRPLANES NOT CHANGED BY S/L 83-12
4. AIRPLANES CHANGED BY S/L 83-12
5. AIRPLANES NOT CHANGED BY S/B 12
6. AIRPLANES CHANGED BY S/B 12

AUXILIARY POWER UNIT SYSTEM
S/N 380-1 thru -4, -6 thru -9 & -11
(Sheet 5 of 10)

© COPYRIGHT, 1988 BY SABRELINER CORPORATION

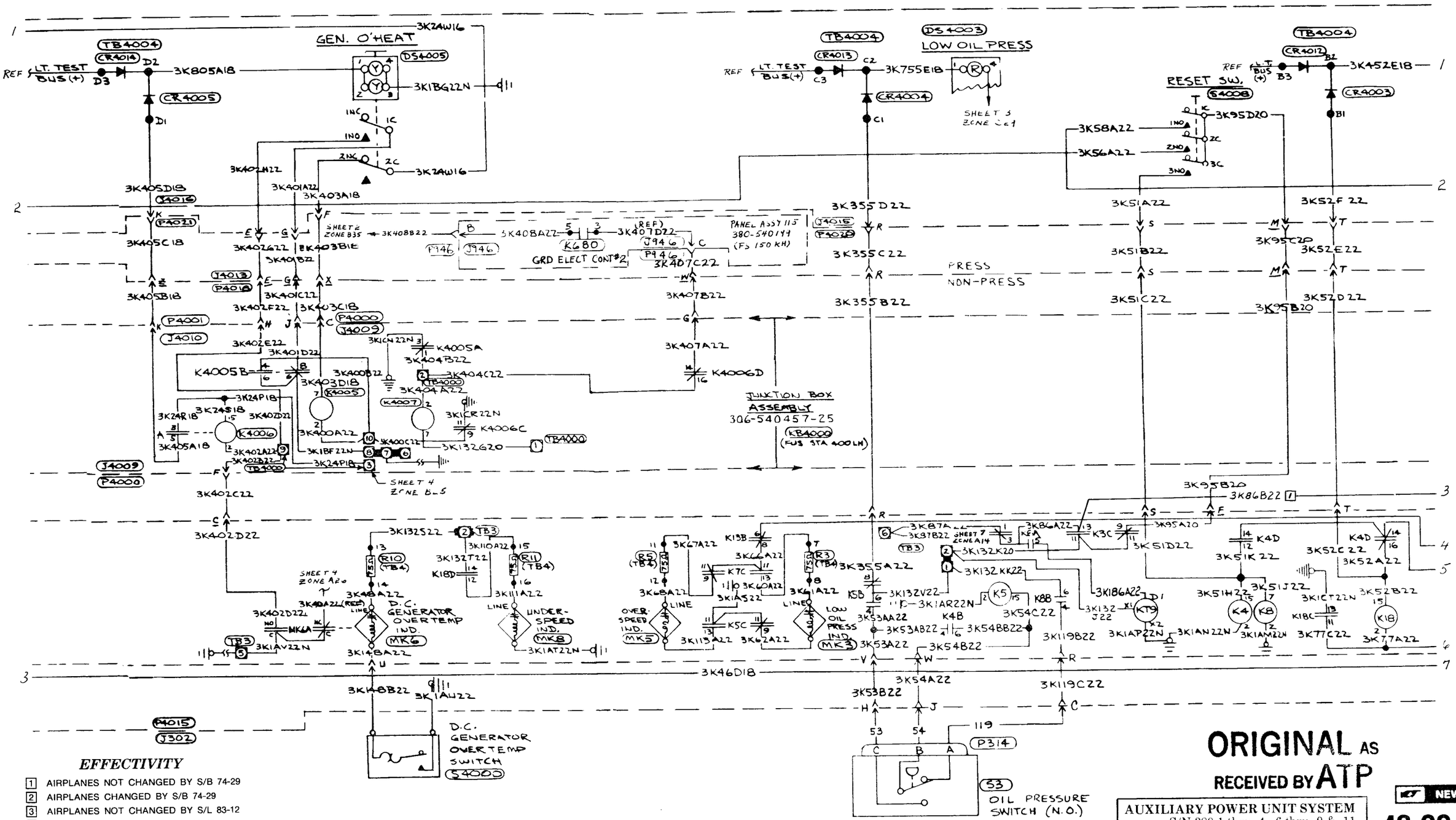

EFFECTIVITY

1 AIRPLANES NOT CHANGED BY S/B 74-29
2 AIRPLANES CHANGED BY S/B 74-29
3 AIRPLANES NOT CHANGED BY S/L 83-12
4 AIRPLANES CHANGED BY S/L 83-12

ORIGINAL AS RECEIVED BY ATP

AUXILIARY POWER UNIT SYSTEM
S/N 380-1 thru -4, -6 thru -9 & -11
(Sheet 6 of 10)

NEW

© COPYRIGHT, 1987 BY SABRELINER CORPORATION

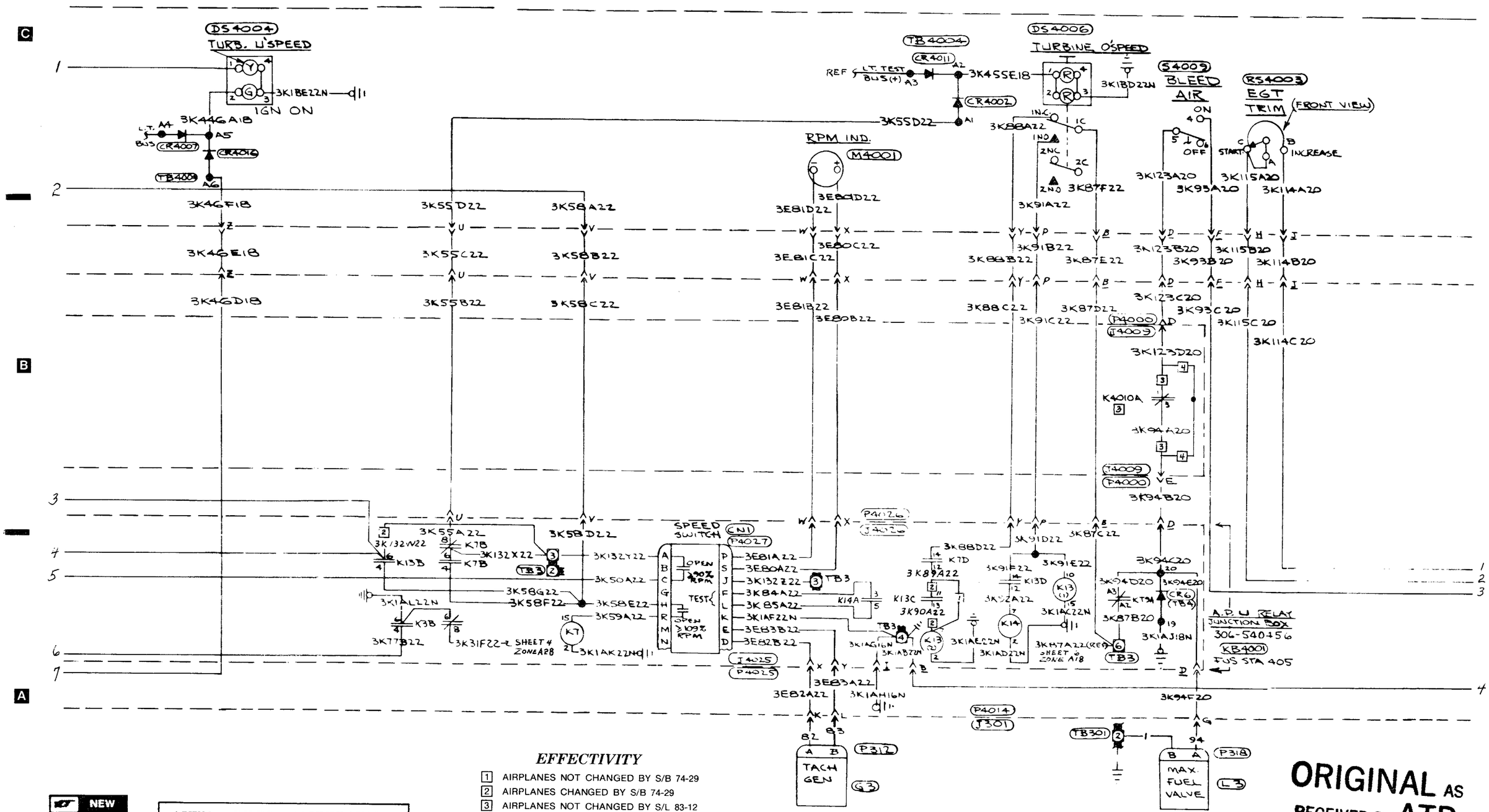

EFFECTIVITY

1. AIRPLANES NOT CHANGED BY S/B 74-29
2. AIRPLANES CHANGED BY S/B 74-29
3. AIRPLANES NOT CHANGED BY S/L 83-12
4. AIRPLANES CHANGED BY S/L 83-12

ORIGINAL AS RECEIVED BY ATP

NEW

AUXILIARY POWER UNIT SYSTEM
S/N 380-1 thru -4, -6 thru -9 & -11
(Sheet 7 of 10)

© COPYRIGHT, 1987 BY SABRELINER CORPORATION

B10.1	16	15	14	13

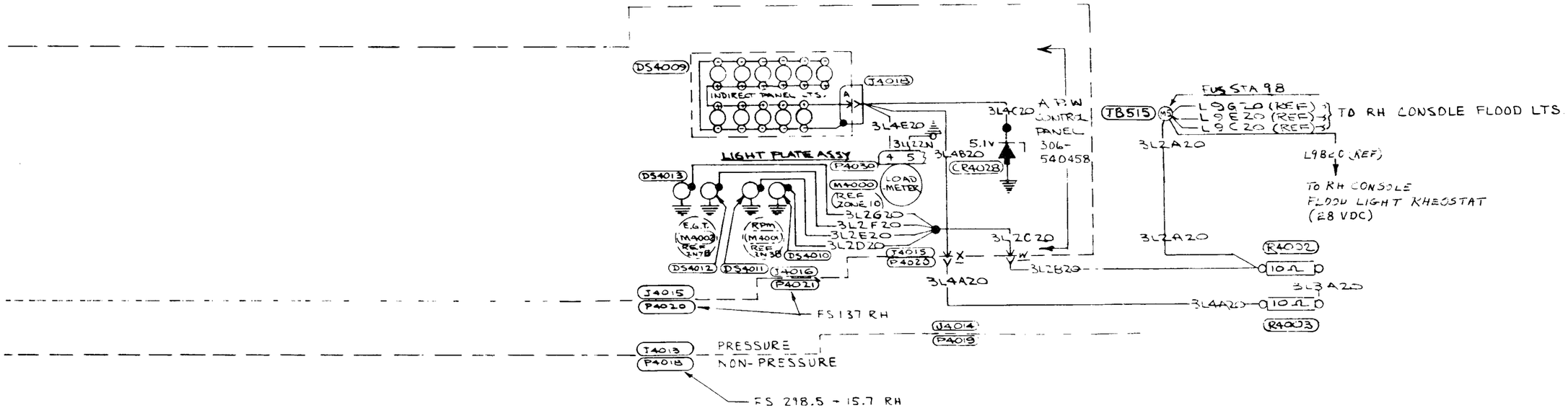

EFFECTIVITY

1. AIRPLANES NOT CHANGED BY S/B 74-29
2. AIRPLANES CHANGED BY S/B 74-29
3. AIRPLANES NOT CHANGED BY S/L 83-12
4. AIRPLANES CHANGED BY S/L 83-12

ORIGINAL AS RECEIVED ATP

© COPYRIGHT, 1987 BY SABRELINER CORPORATION

AUXILIARY POWER UNIT SYSTEM
S/N 380-1 thru -4, -6 thru -9 & -11
(Sheet 8 of 10)

NEW

EFFECTIVITY

1 AIRPLANES NOT CHANGED BY S/B 74-29
2 AIRPLANES CHANGED BY S/B 74-29
3 AIRPLANES NOT CHANGED BY S/L 83-12
4 AIRPLANES CHANGED BY S/L 83-12

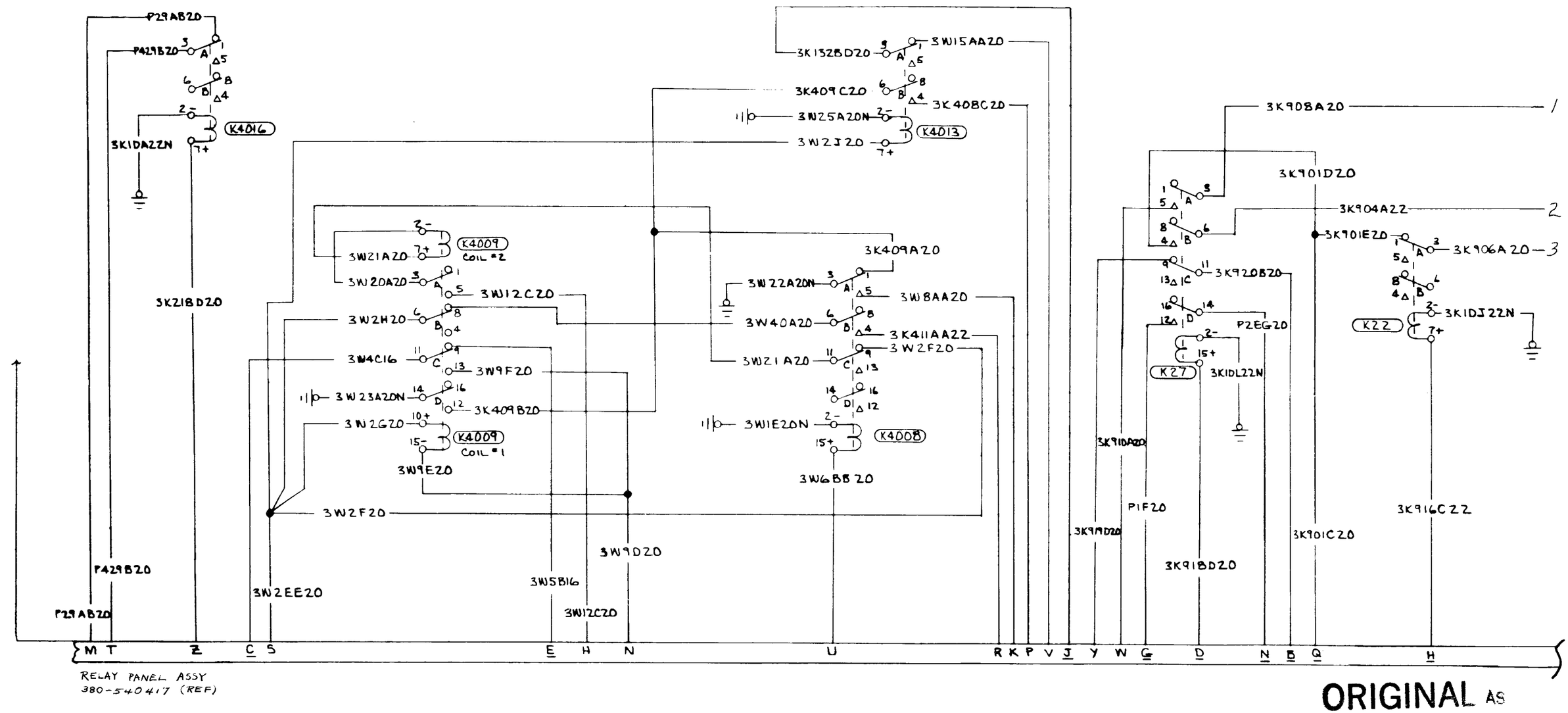

ORIGINAL AS RECEIVED BY ATF

NEW

AUXILIARY POWER UNIT SYSTEM
S/N 380-1 thru -4, -6 thru -9 & -11
(Sheet 9 of 10)

© COPYRIGHT, 1987 BY SABRELINER CORPORATION

B10.1	8	7	6	5

EFFECTIVITY

1 AIRPLANES NOT CHANGED BY S/B 74-29
2 AIRPLANES CHANGED BY S/B 74-29
3 AIRPLANES NOT CHANGED BY S/L 83-12
4 AIRPLANES CHANGED BY S/L 83-12

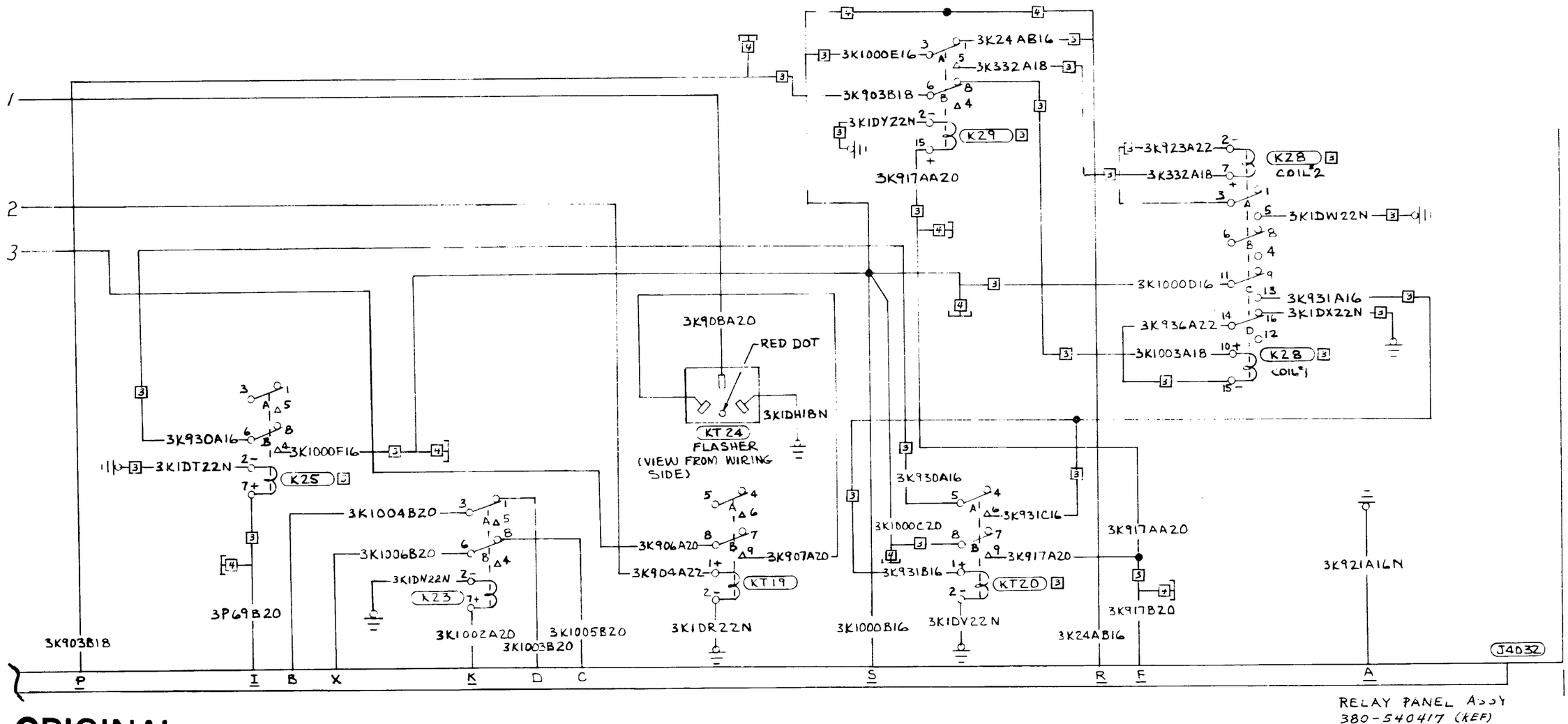

ORIGINAL AS RECEIVED BY ATP

© COPYRIGHT, 1987 BY SABRELINER CORPORATION

AUXILIARY POWER UNIT SYSTEM
S/N 380-1 thru -4, -6 thru -9 & -11
(Sheet 10 of 10)

NEW

4 | 3 | 2 | 1 | B10.1

CHAPTER

71

POWERPLANT

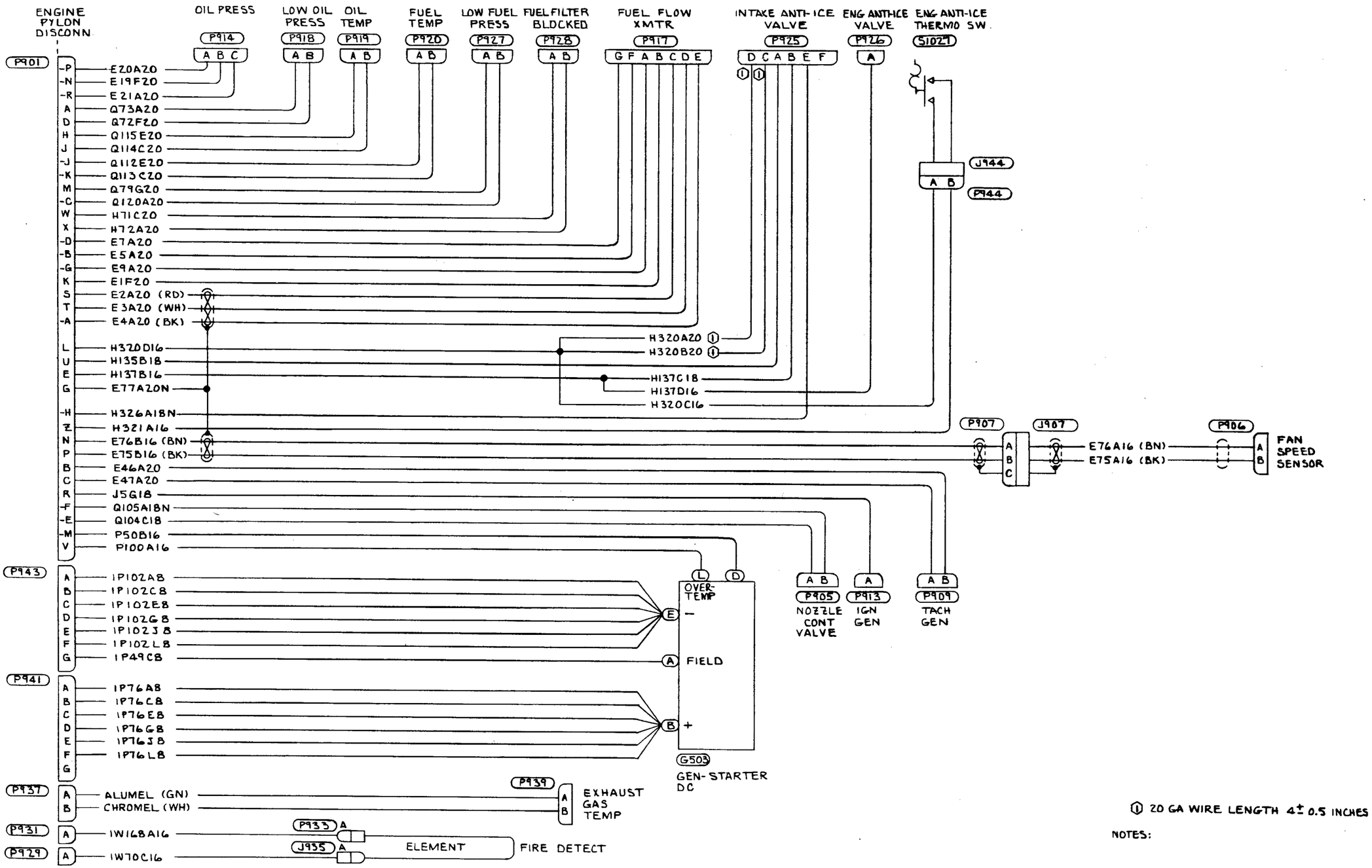

© COPYRIGHT, 1981 BY ROCKWELL INTERNATIONAL

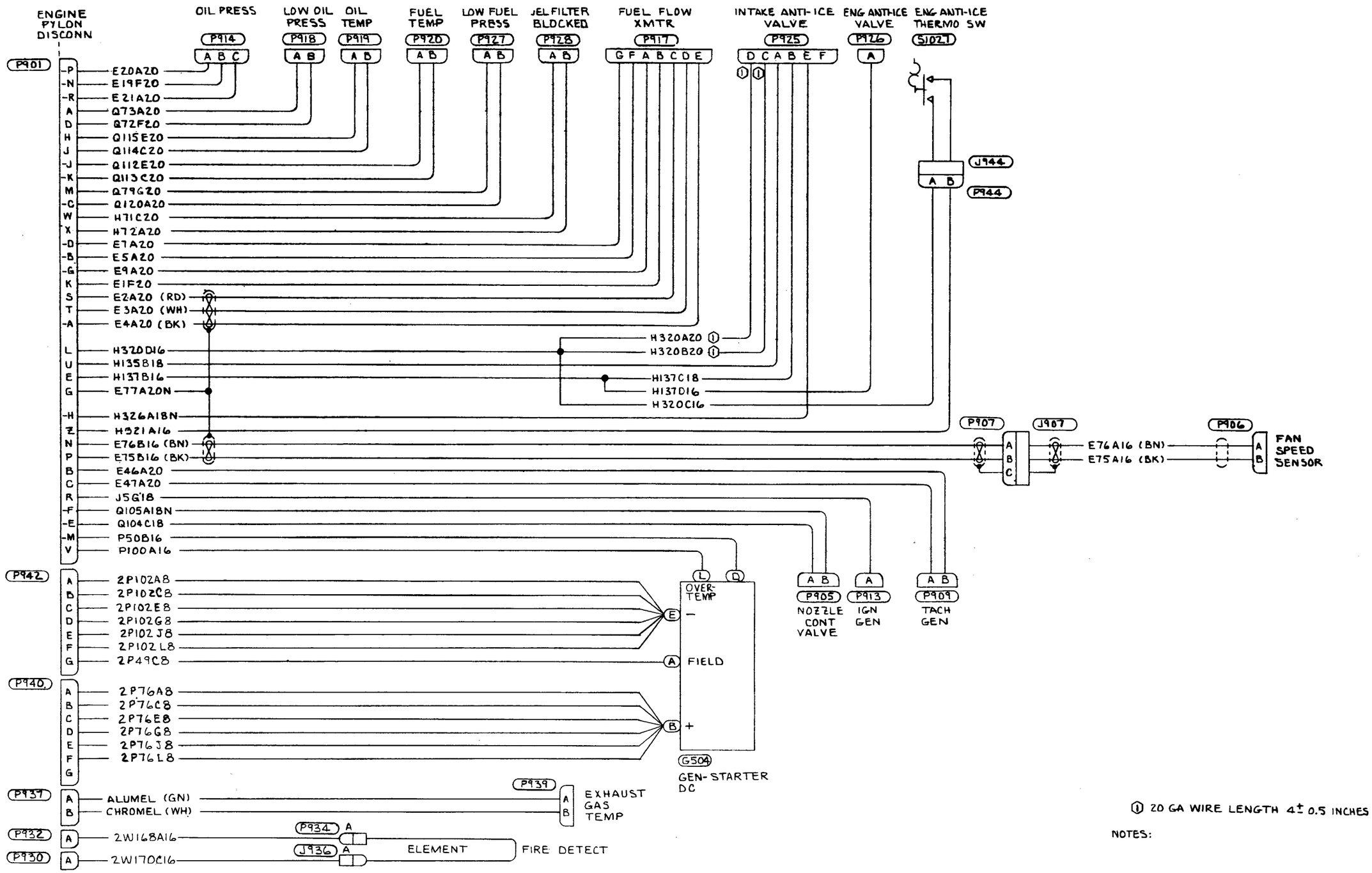

① 20 GA WIRE LENGTH 4± 0.5 INCHES

NOTES:

© COPYRIGHT, 1981 BY ROCKWELL INTERNATIONAL

CHAPTER

74

IGNITION

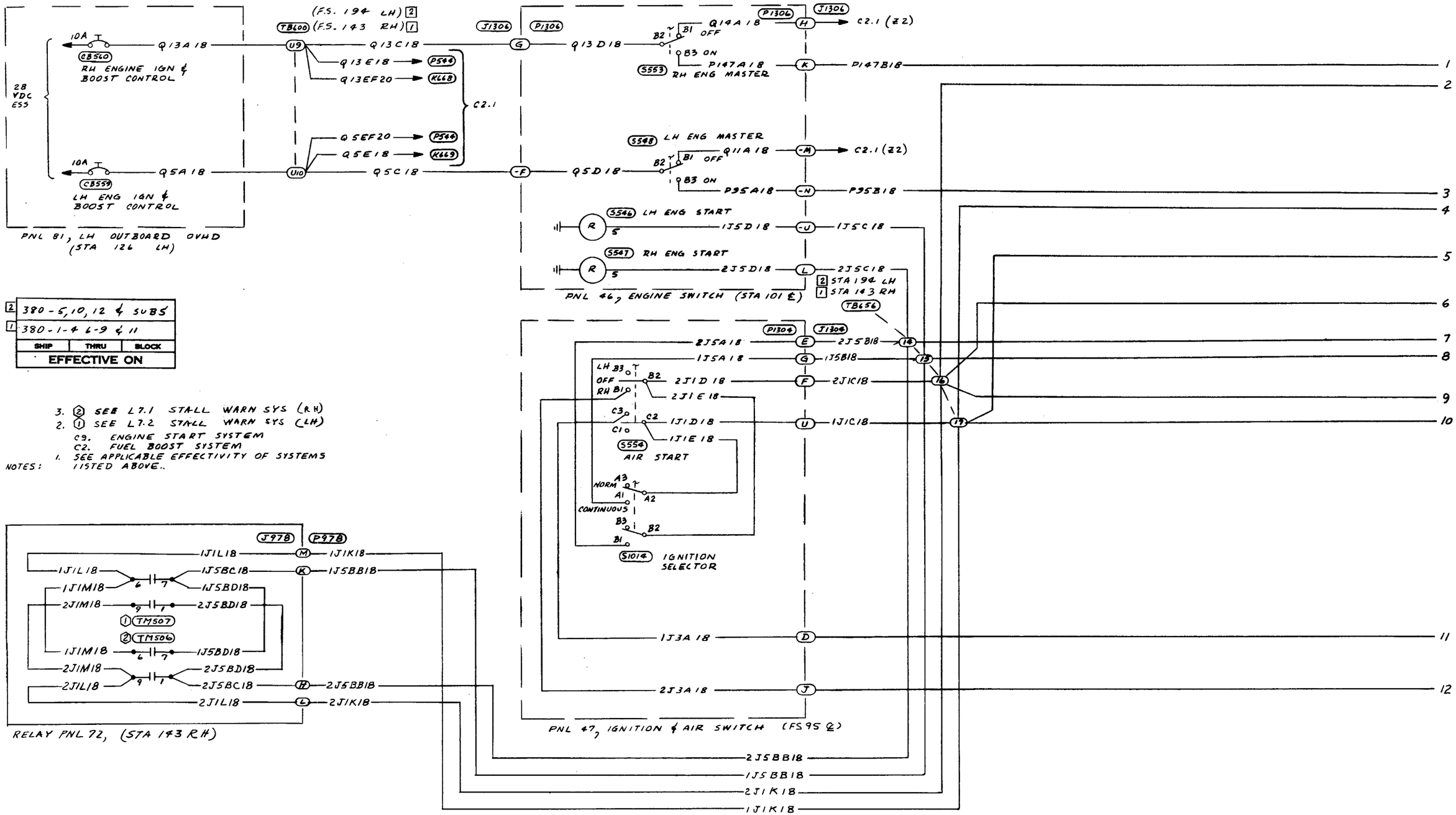

2	380-5, 10, 12 & SUBS
1	380-1-4 6-9 & 11
SHIP	THRU / BLOCK
EFFECTIVE ON	

NOTES:
1. SEE APPLICABLE EFFECTIVITY OF SYSTEMS LISTED ABOVE.
2. (1) SEE L7.2 STALL WARN SYS (LH)
3. (2) SEE L7.1 STALL WARN SYS (RH)

C1. ENGINE START SYSTEM
C2. FUEL BOOST SYSTEM

ENGINE IGNITION SYSTEM
(Sheet 1 of 2)

© COPYRIGHT, 1981 BY ROCKWELL INTERNATIONAL

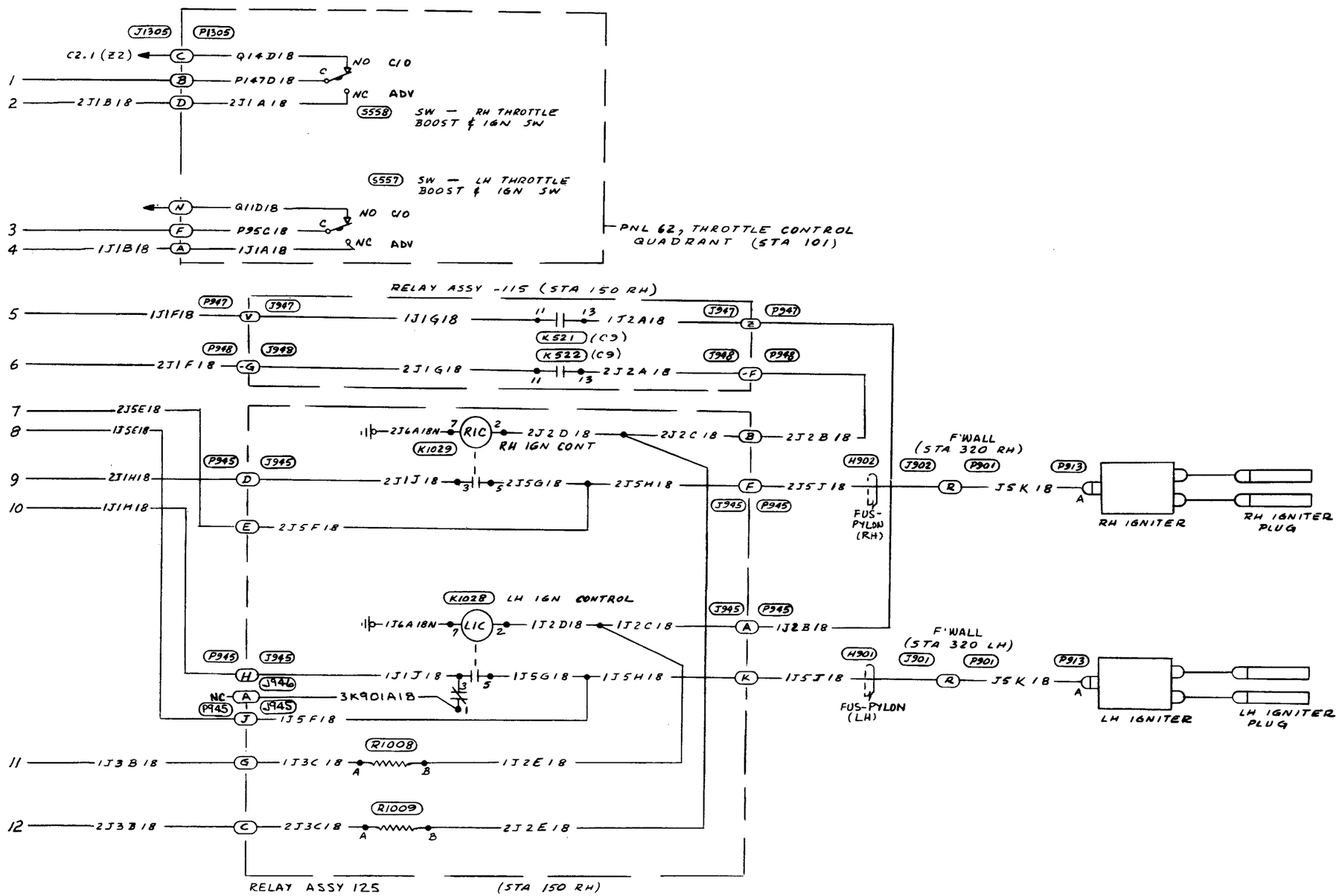

ENGINE IGNITION SYSTEM
(Sheet 2 of 2)

© COPYRIGHT, 1981 BY ROCKWELL INTERNATIONAL

CHAPTER

75

AIR

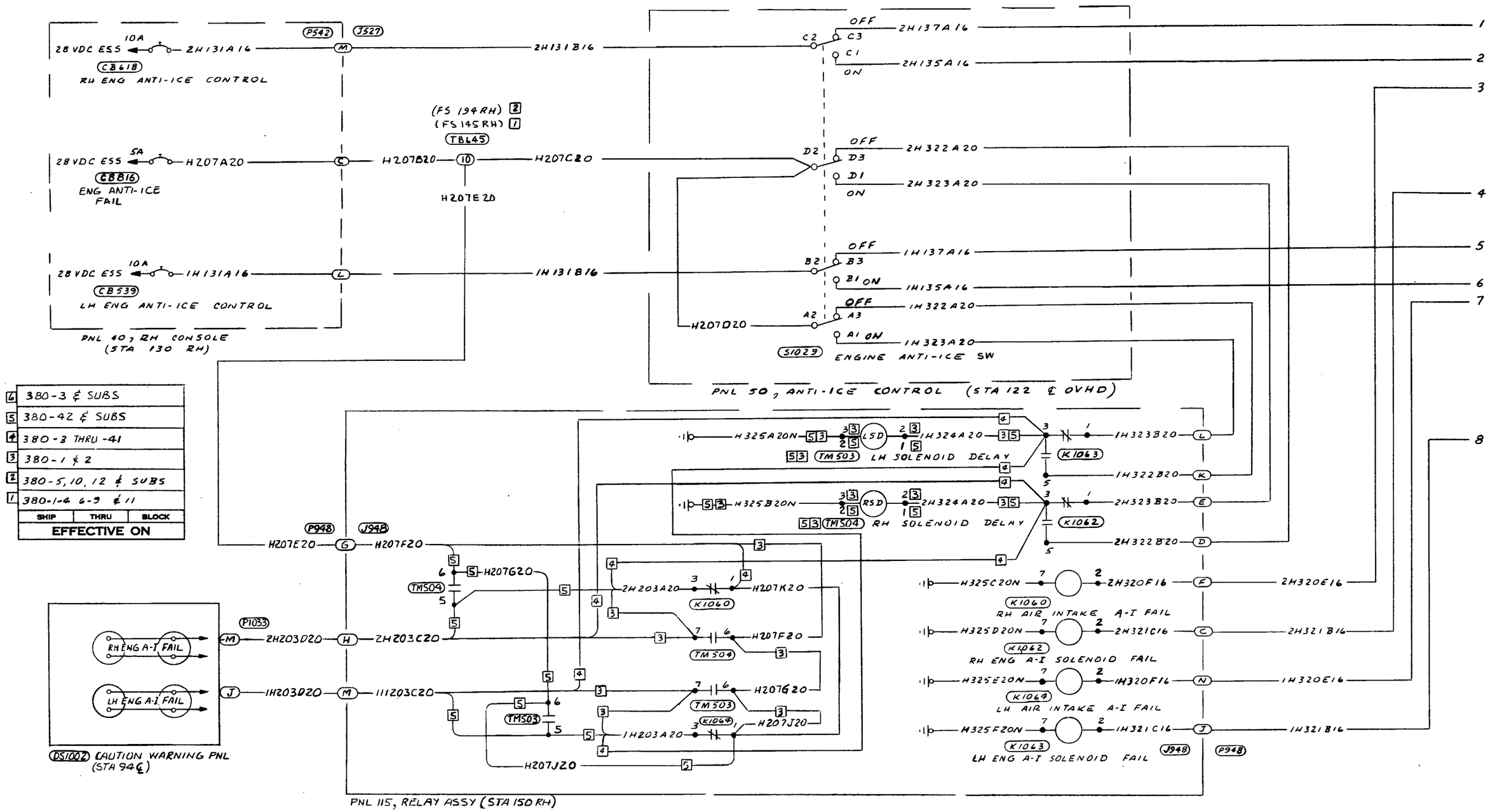

ENGINE ANTI-ICE SYSTEM
(Sheet 1 of 2)

© COPYRIGHT, 1981 BY ROCKWELL INTERNATIONAL

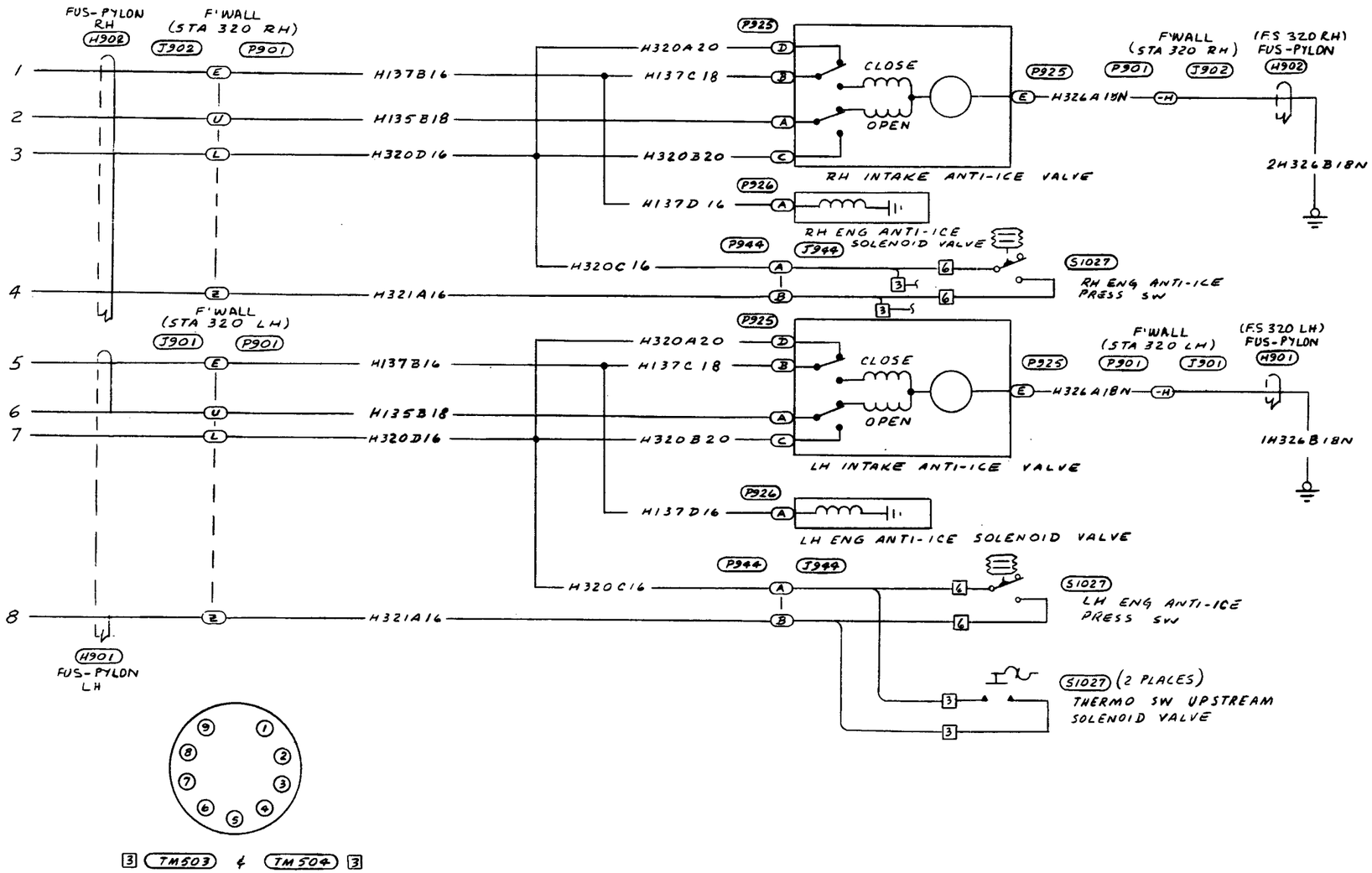

ENGINE ANTI-ICE SYSTEM
(Sheet 2 of 2)

© COPYRIGHT, 1981 BY ROCKWELL INTERNATIONAL

CHAPTER

77

ENGINE INDICATING

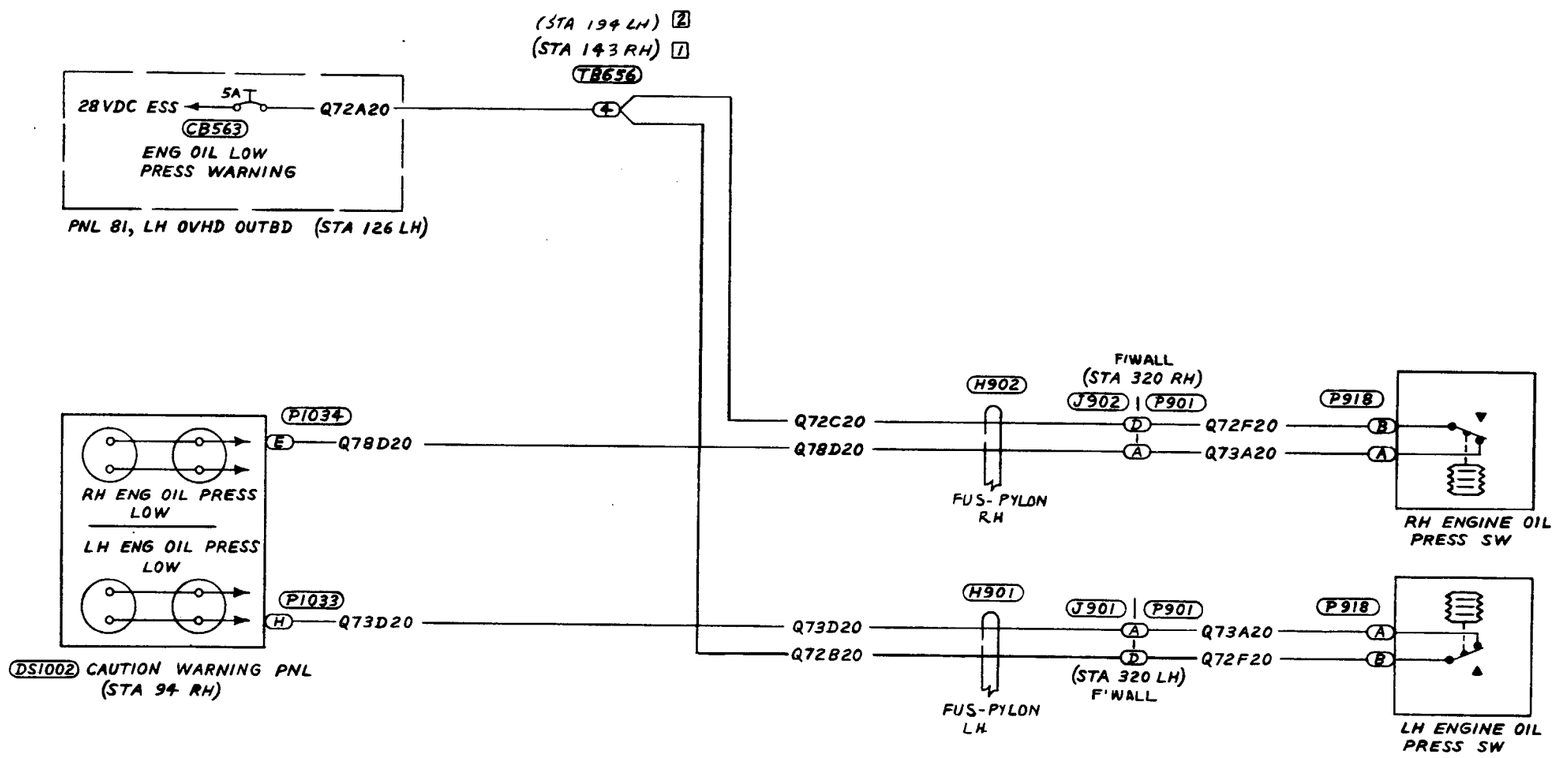

2	380-5,10,12 & SUBS
1	380-1-4,6-9 & 11

SHIP	THRU	BLOCK
EFFECTIVE ON		

© COPYRIGHT, 1981 BY ROCKWELL INTERNATIONAL

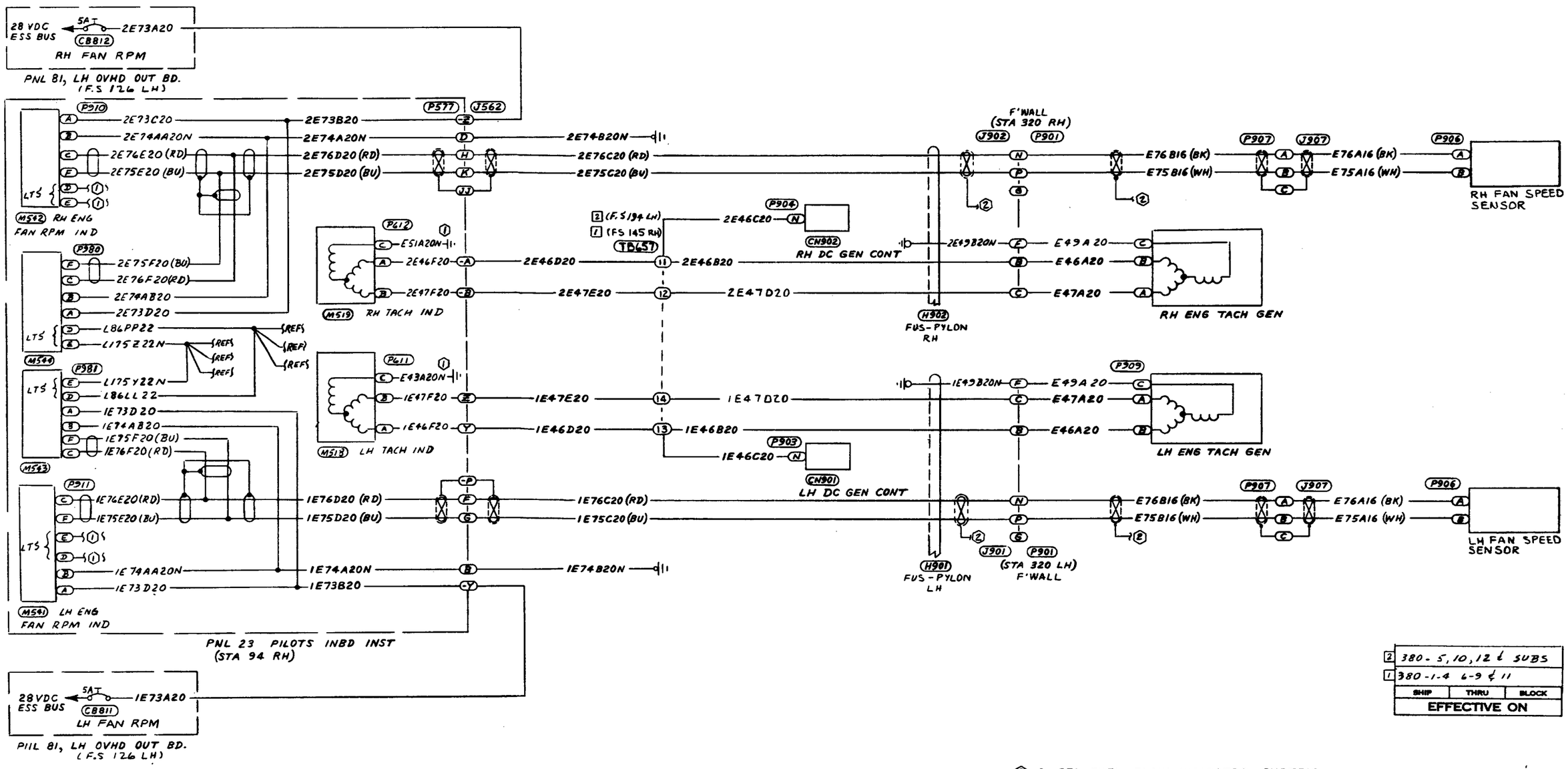

2	380-5, 10, 12 & SUBS
1	380-1-4 6-9 & 11
SHIP	THRU BLOCK
EFFECTIVE ON	

NOTES:

(1) 1. ENGINE, RADIO & INST. INDIRECT LTS SYS (370-954043).

(2) 2. J51 FUEL FLOW INDICATOR SYSTEM

© COPYRIGHT, 1981 BY ROCKWELL INTERNATIONAL

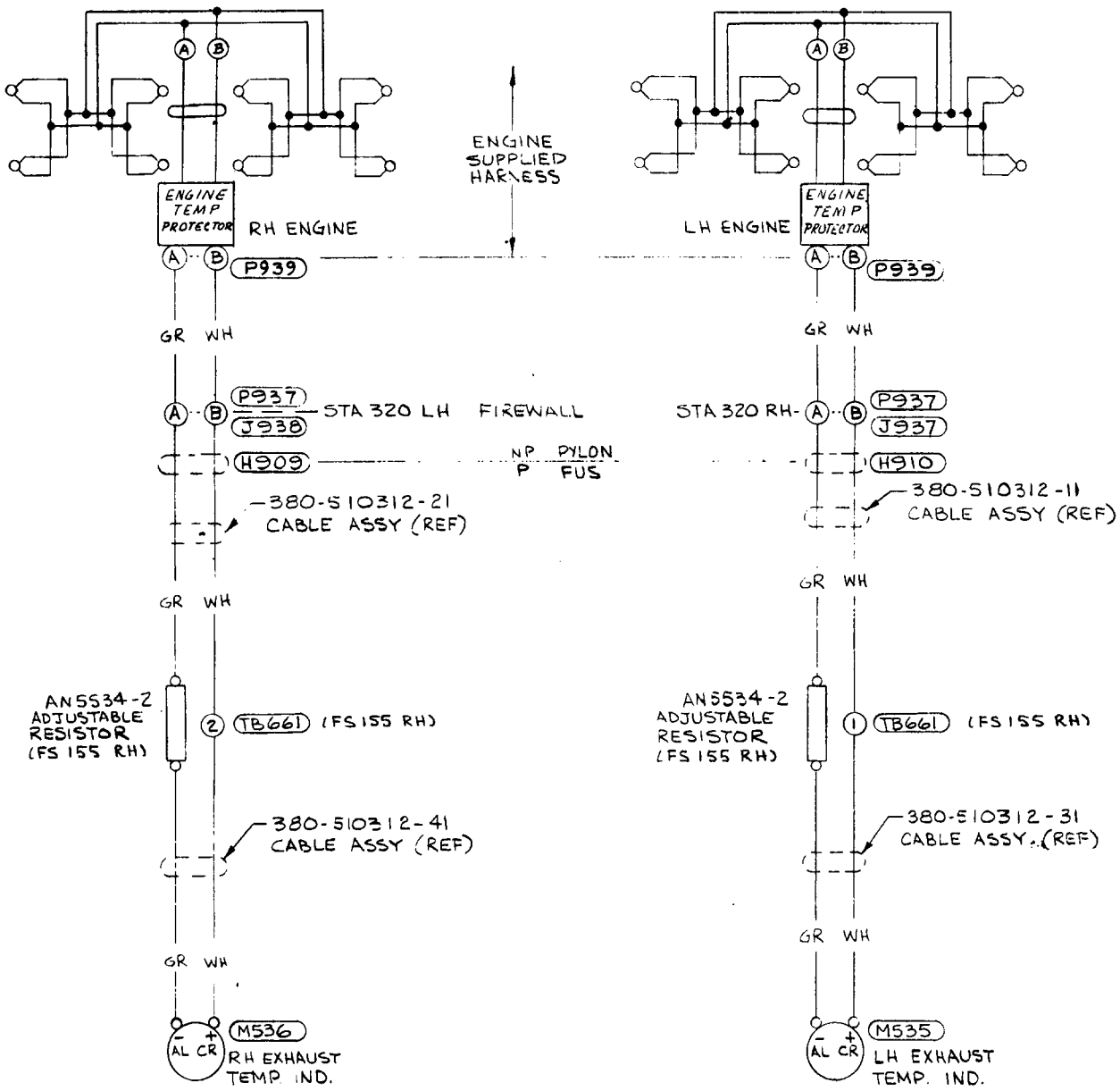

SHIP	THRU	BLOCK
EFFECTIVE ON		
J14.1		

© COPYRIGHT, 1981 BY ROCKWELL INTERNATIONAL

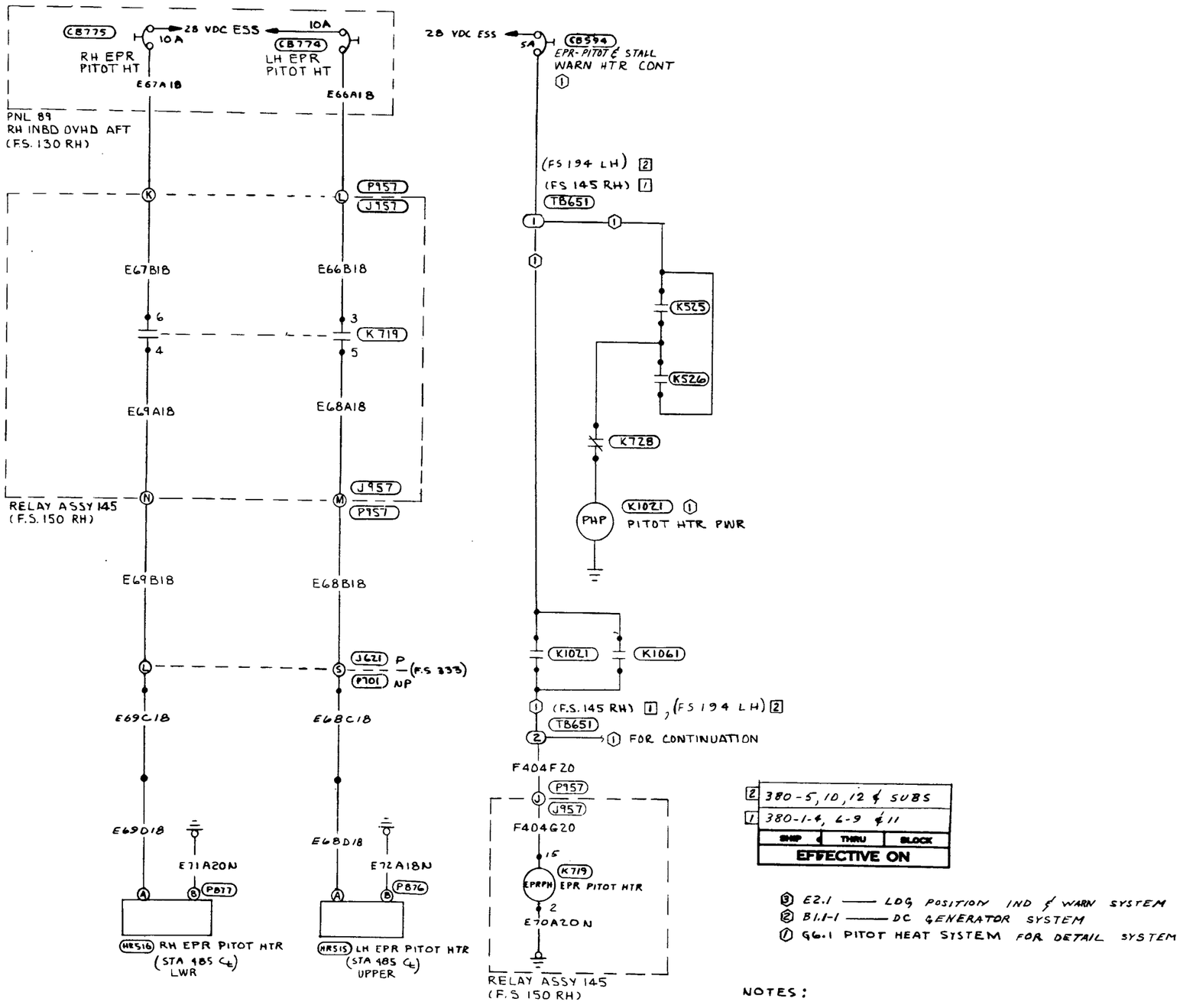

ENGINE PRESSURE RATIO SYSTEM
(Sheet 1 of 2)

© COPYRIGHT, 1981 BY ROCKWELL INTERNATIONAL

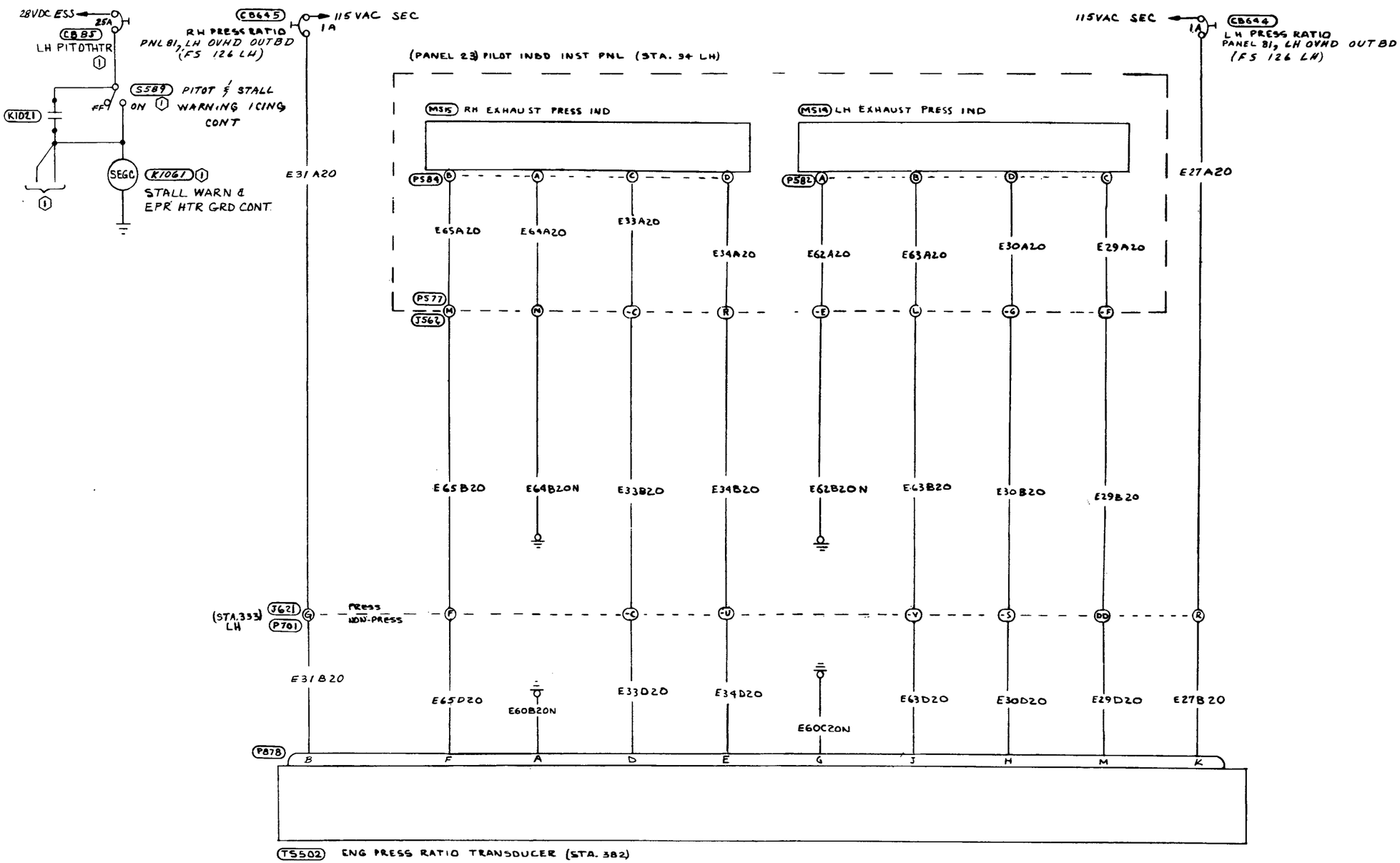

ENGINE PRESSURE RATIO SYSTEM
(Sheet 2 of 2)

© COPYRIGHT, 1981 BY ROCKWELL INTERNATIONAL

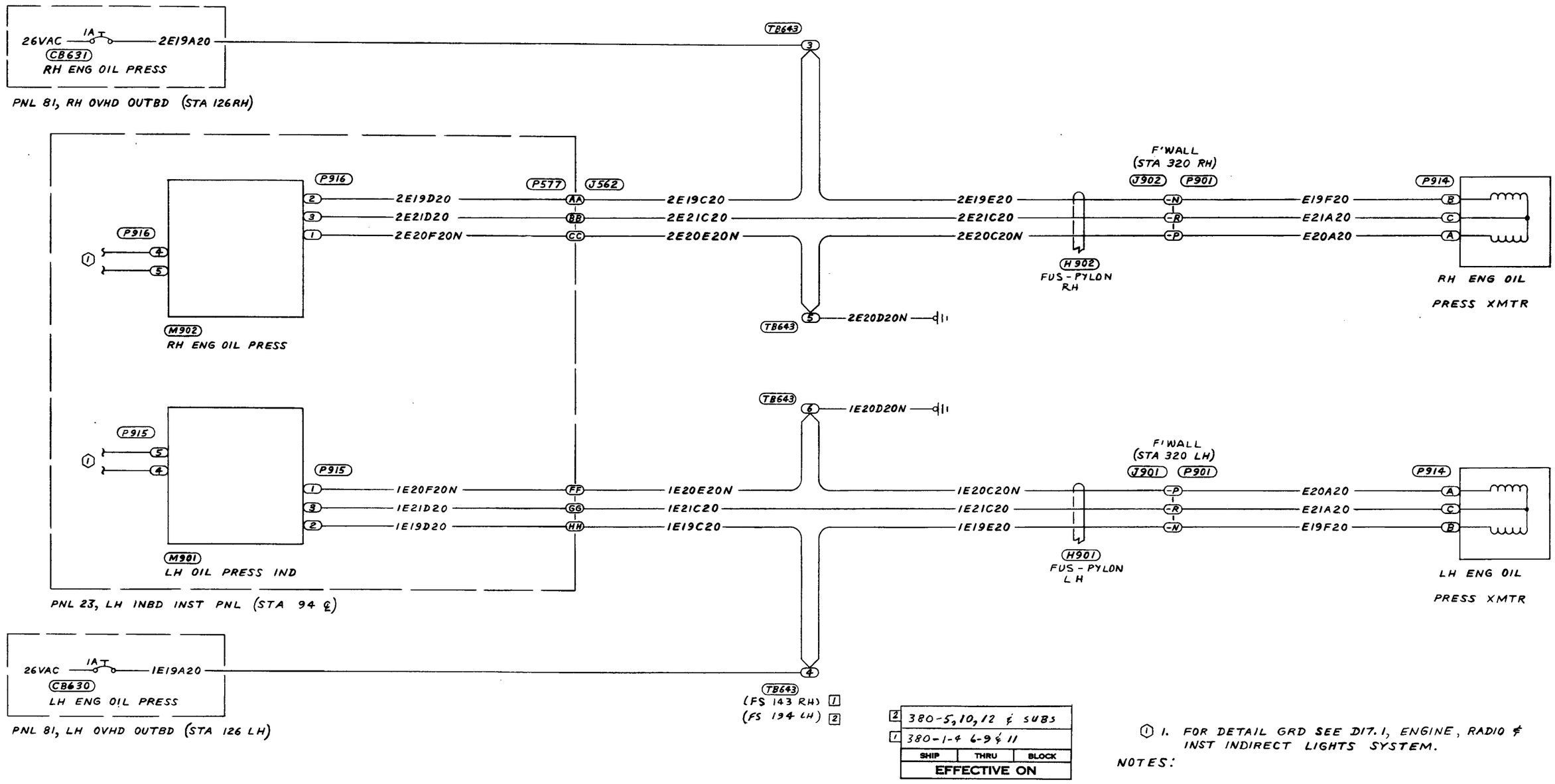

2	380-5,10,12 & SUBS	
1	380-1-4 6-9 & 11	
SHIP	THRU	BLOCK
EFFECTIVE ON		

NOTES:

1. FOR DETAIL GRD SEE D17.1, ENGINE, RADIO & INST INDIRECT LIGHTS SYSTEM.

© COPYRIGHT, 1981 BY ROCKWELL INTERNATIONAL

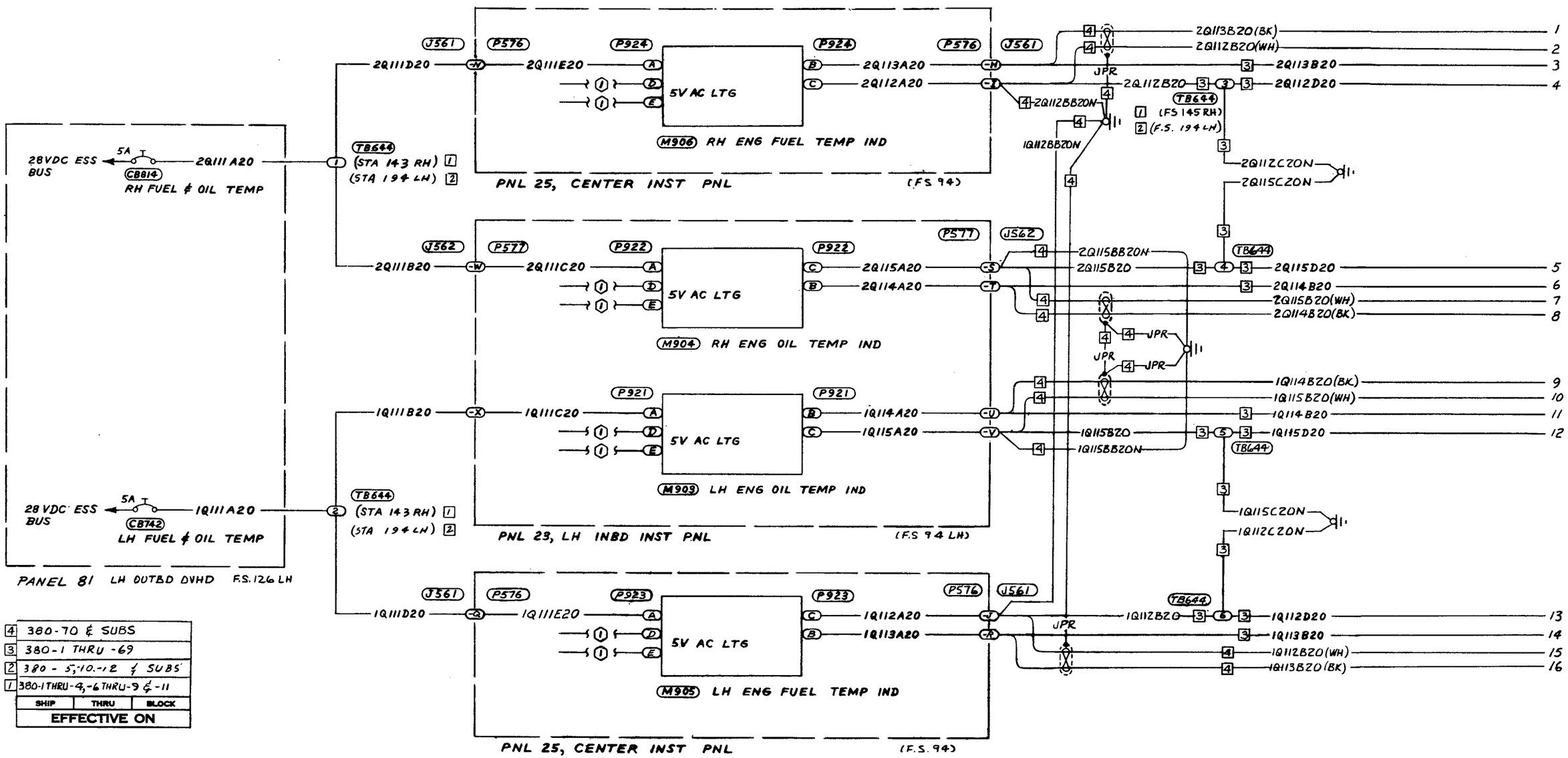

1. FOR DETAIL GRD SEE D17.1, ENGINE, RADIO & INST INDIRECT LIGHTS SYSTEM.

NOTES:

FUEL & OIL TEMPERATURE INDICATING SYSTEM
(Sheet 1 of 2)

© COPYRIGHT, 1981 BY ROCKWELL INTERNATIONAL

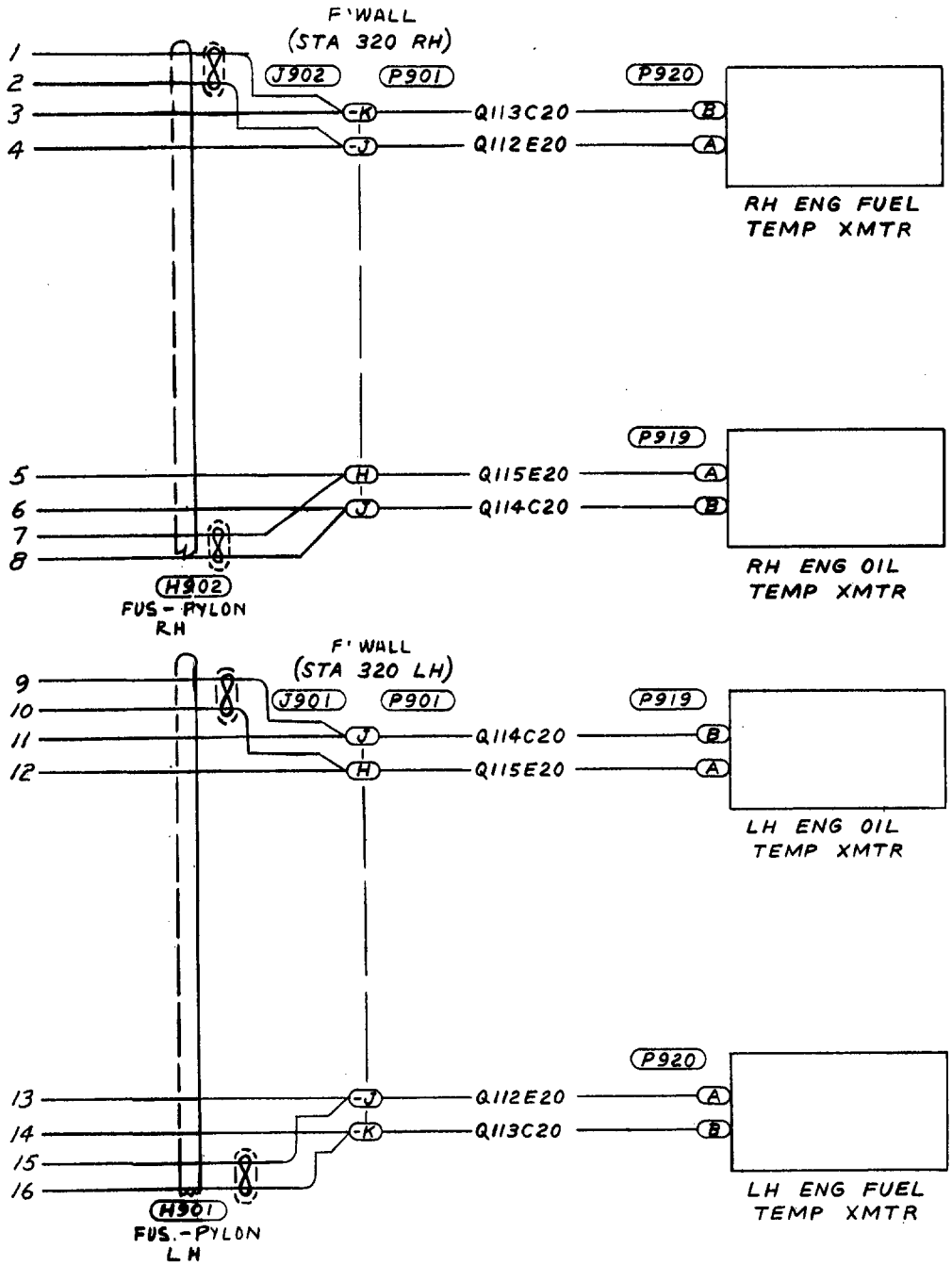

FUEL & OIL TEMPERATURE INDICATING SYSTEM
(Sheet 2 of 2)

© COPYRIGHT, 1981 BY ROCKWELL INTERNATIONAL

CHAPTER

78

EXHAUST

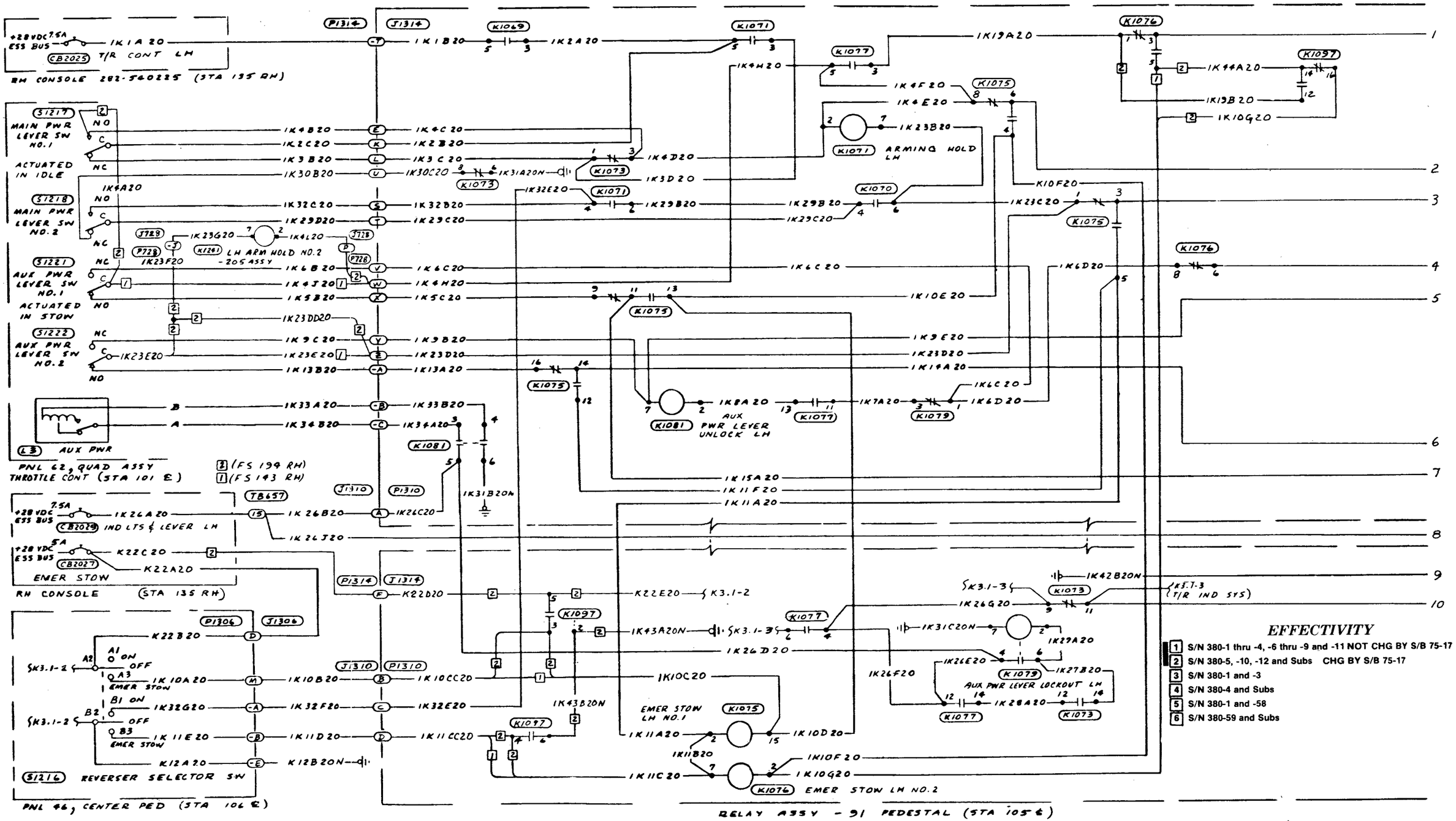

EFFECTIVITY

1. S/N 380-1 thru -4, -6 thru -9 and -11 NOT CHG BY S/B 75-17
2. S/N 380-5, -10, -12 and Subs CHG BY S/B 75-17
3. S/N 380-1 and -3
4. S/N 380-4 and Subs
5. S/N 380-1 and -58
6. S/N 380-59 and Subs

LH ENGINE THRUST REVERSER CONTROL SYSTEM
(S/N 380-1 and Subs Not Changed by SOK No. 28)
(Sheet 1 of 2)

K3.1-1

© COPYRIGHT, 1983 BY ROCKWELL INTERNATIONAL

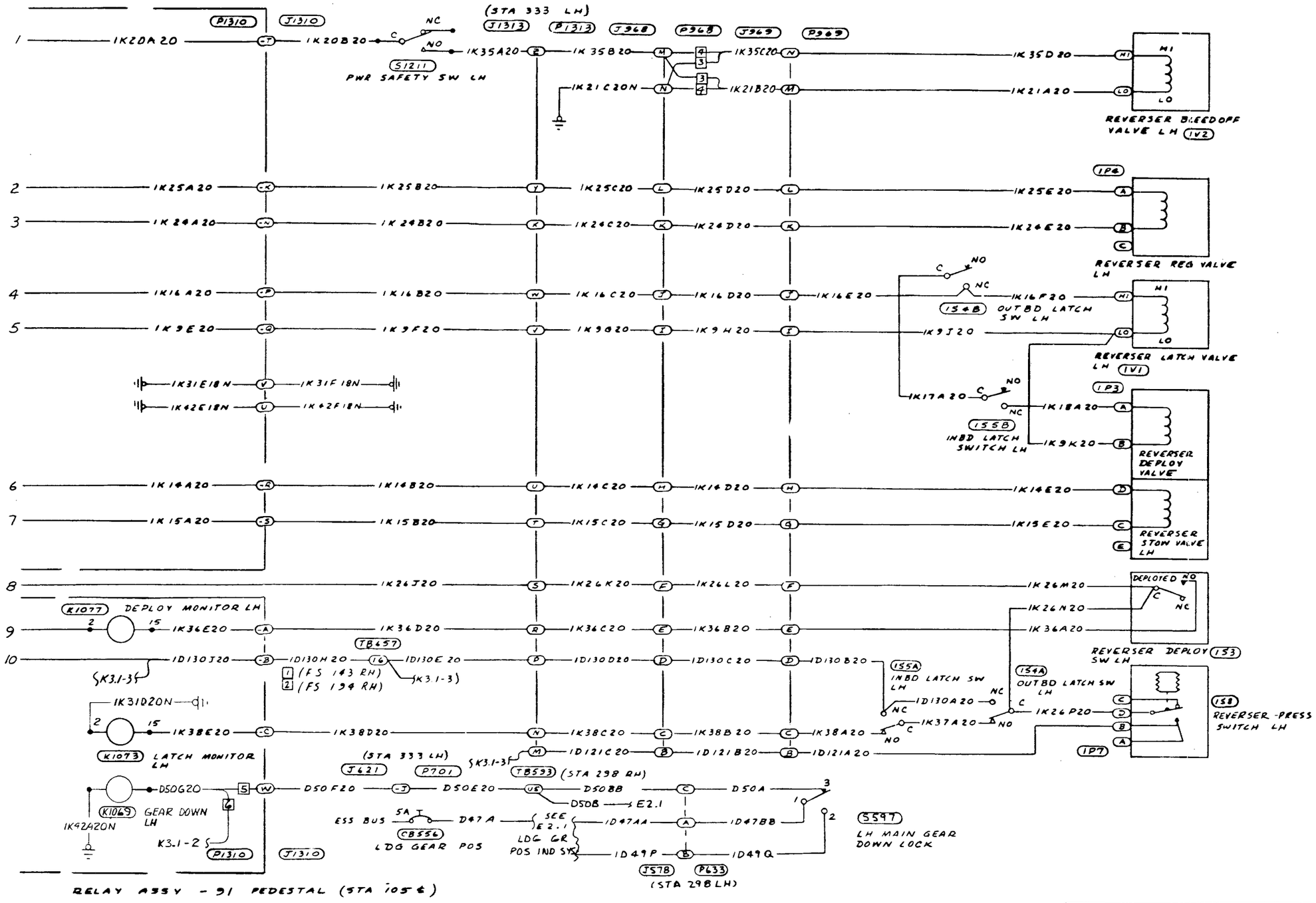

© COPYRIGHT, 1983 BY ROCKWELL INTERNATIONAL

LH ENGINE THRUST REVERSER CONTROL SYSTEM
(S/N 380-1 and Subs Not Changed by SOK No. 28)
(Sheet 2 of 2)

K3.1-1

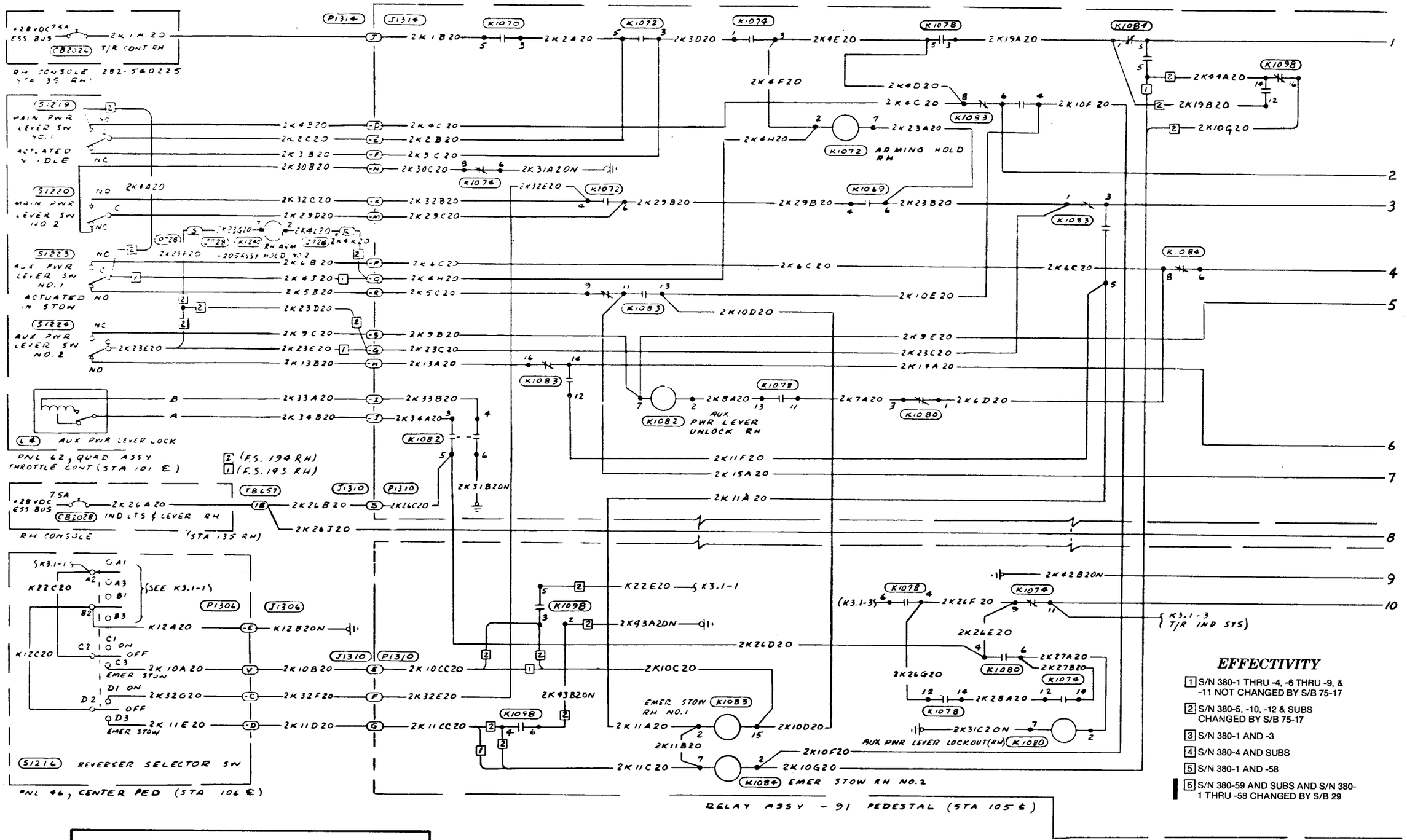

EFFECTIVITY

1. S/N 380-1 THRU -4, -6 THRU -9, & -11 NOT CHANGED BY S/B 75-17
2. S/N 380-5, -10, -12 & SUBS CHANGED BY S/B 75-17
3. S/N 380-1 AND -3
4. S/N 380-4 AND SUBS
5. S/N 380-1 AND -58
6. S/N 380-59 AND SUBS AND S/N 380-1 THRU -58 CHANGED BY S/B 29

RH ENGINE THRUST REVERSER CONTROL SYSTEM
S/N 380-1 and Subs Not Changed by SOK No. 28
(Sheet 1 of 2)

© COPYRIGHT, 1987 BY SABRELINER CORPORATION

K3.1-2	8	7	6	5

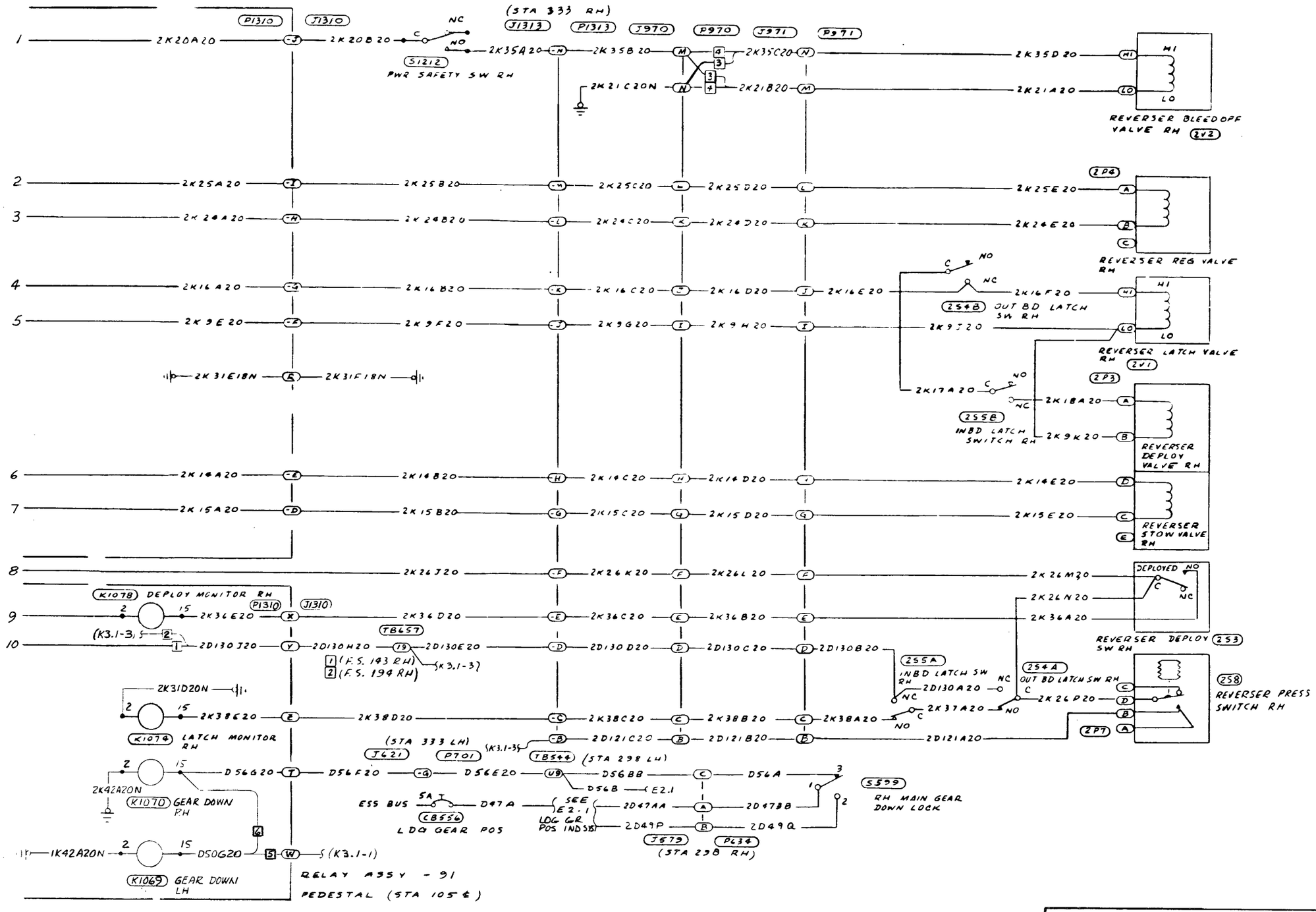

© COPYRIGHT, 1987 BY SABRELINER CORPORATION

RH ENGINE THRUST REVERSER CONTROL SYSTEM
S/N 380-1 and Subs Not Changed by SOK No. 28
(Sheet 2 of 2)

4	3	2	1	K3.1-2

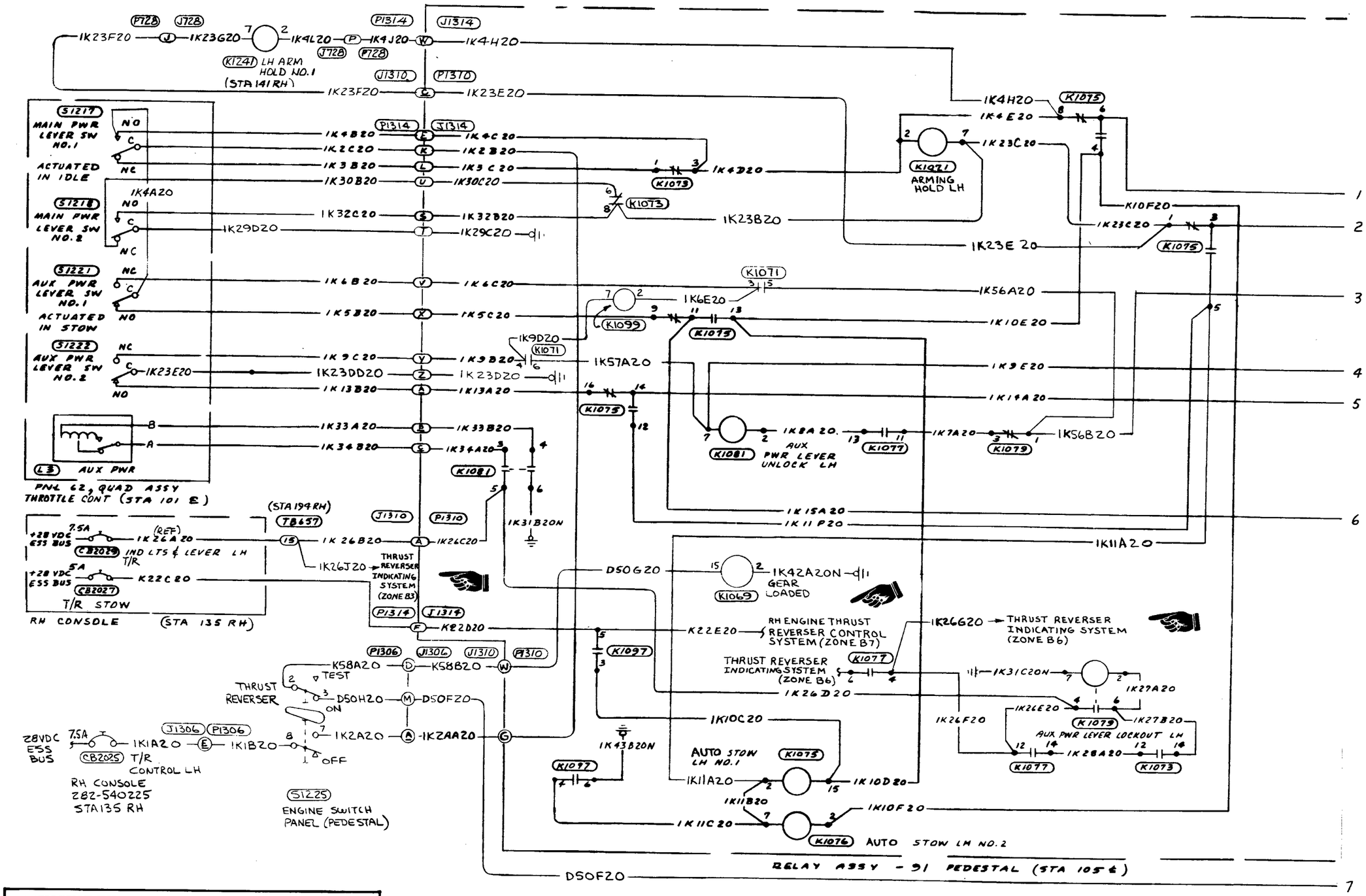

78-30-1
Page 9 Blank/10
May 30/90

LH ENGINE THRUST REVERSER CONTROL SYSTEM
S/N 380-5, -10, -12, & Subs changed by SOK 28
(Sheet 1 of 2)

© COPYRIGHT, 1990 BY SABRELINER CORPORATION

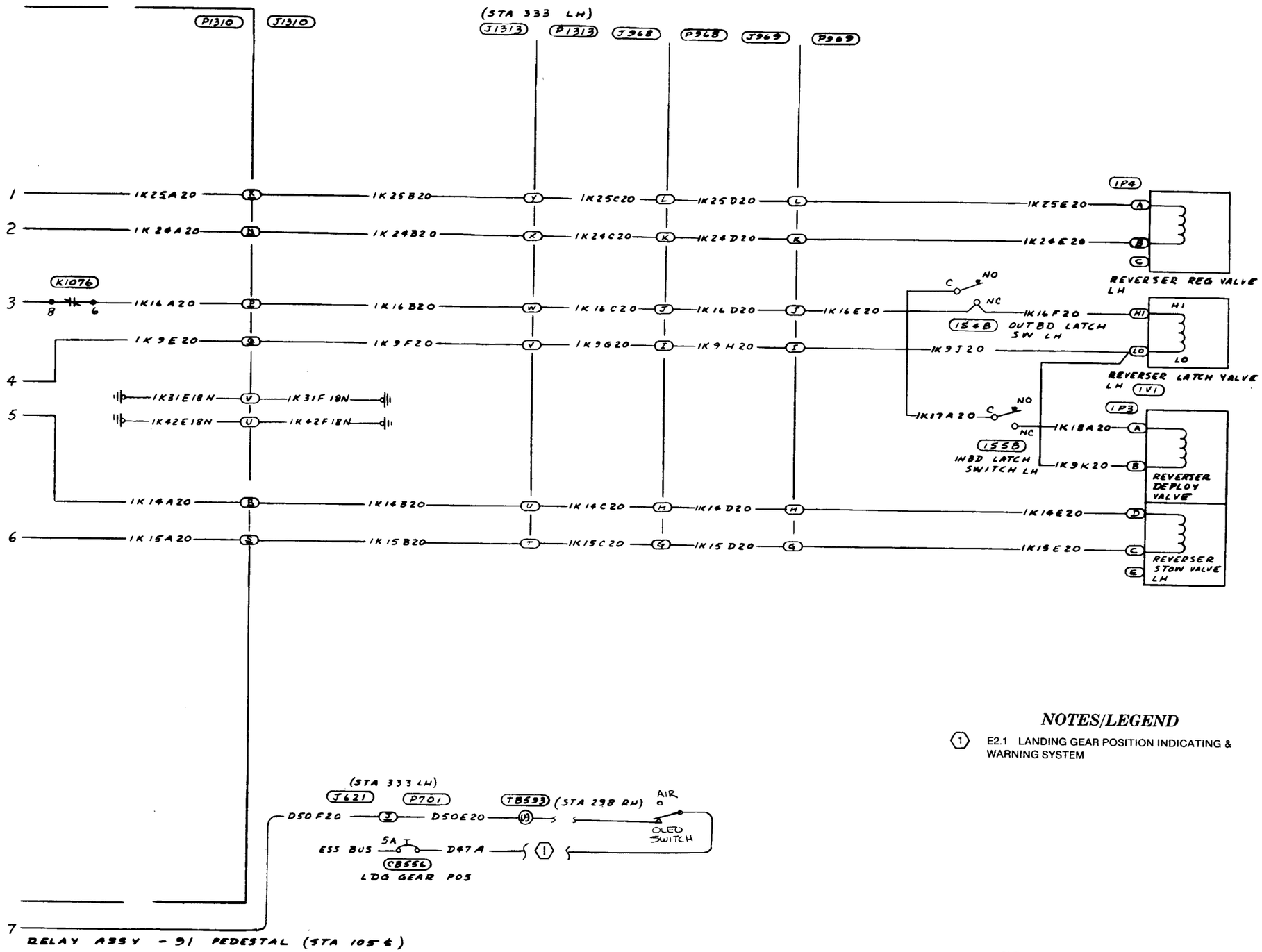

NOTES/LEGEND

(1) E2.1 LANDING GEAR POSITION INDICATING & WARNING SYSTEM

© COPYRIGHT, 1990 BY SABRELINER CORPORATION

LH ENGINE THRUST REVERSER CONTROL SYSTEM
S/N 380-5, -10, -12, & Subs changed by SOK 28
(Sheet 2 of 2)

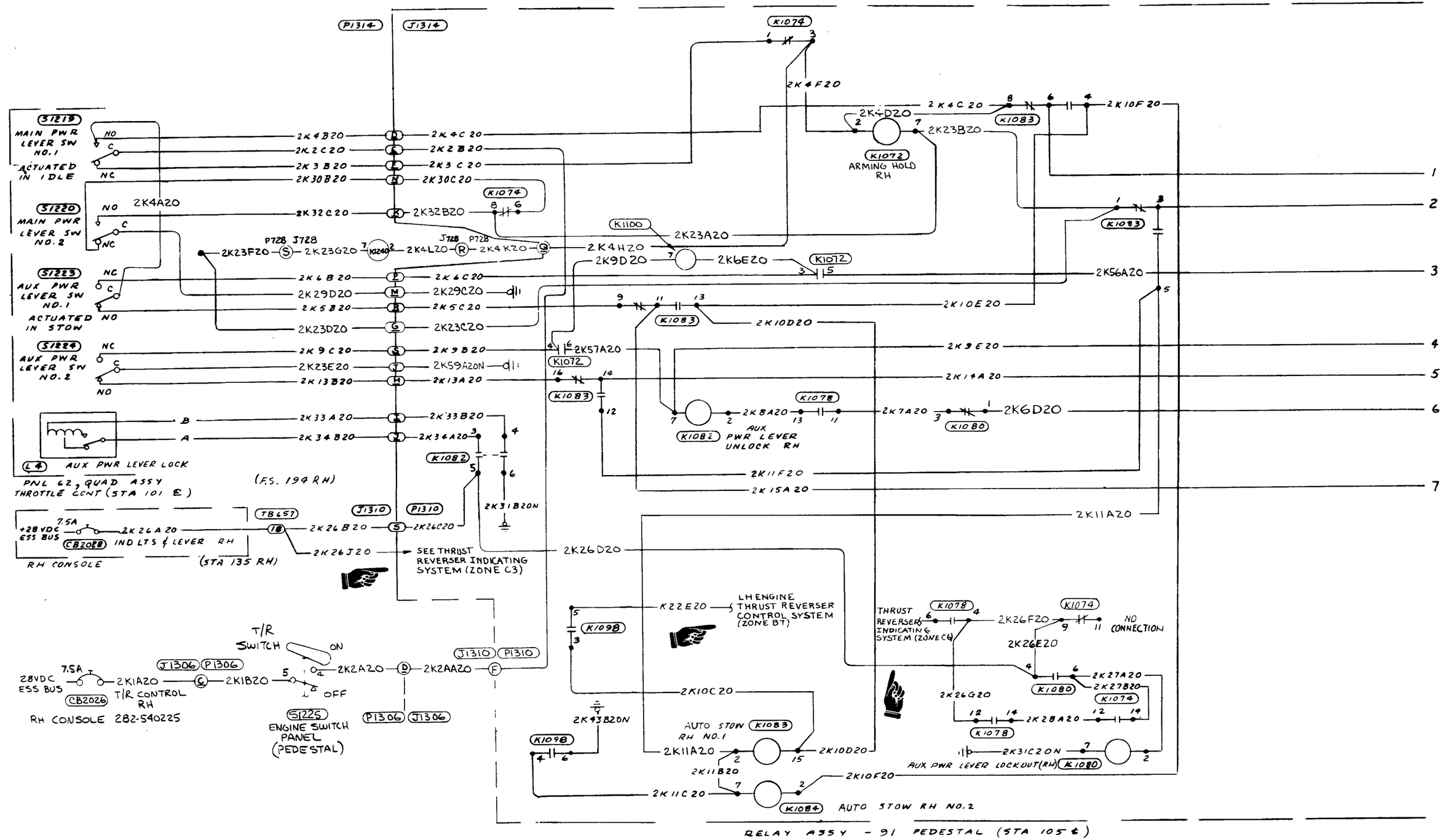

RH ENGINE THRUST REVERSER CONTROL SYSTEM
S/N 380-5, -10, -12, & Subs changed by SOK 28
(Sheet 1 of 2)

© COPYRIGHT, 1990 BY SABRELINER CORPORATION

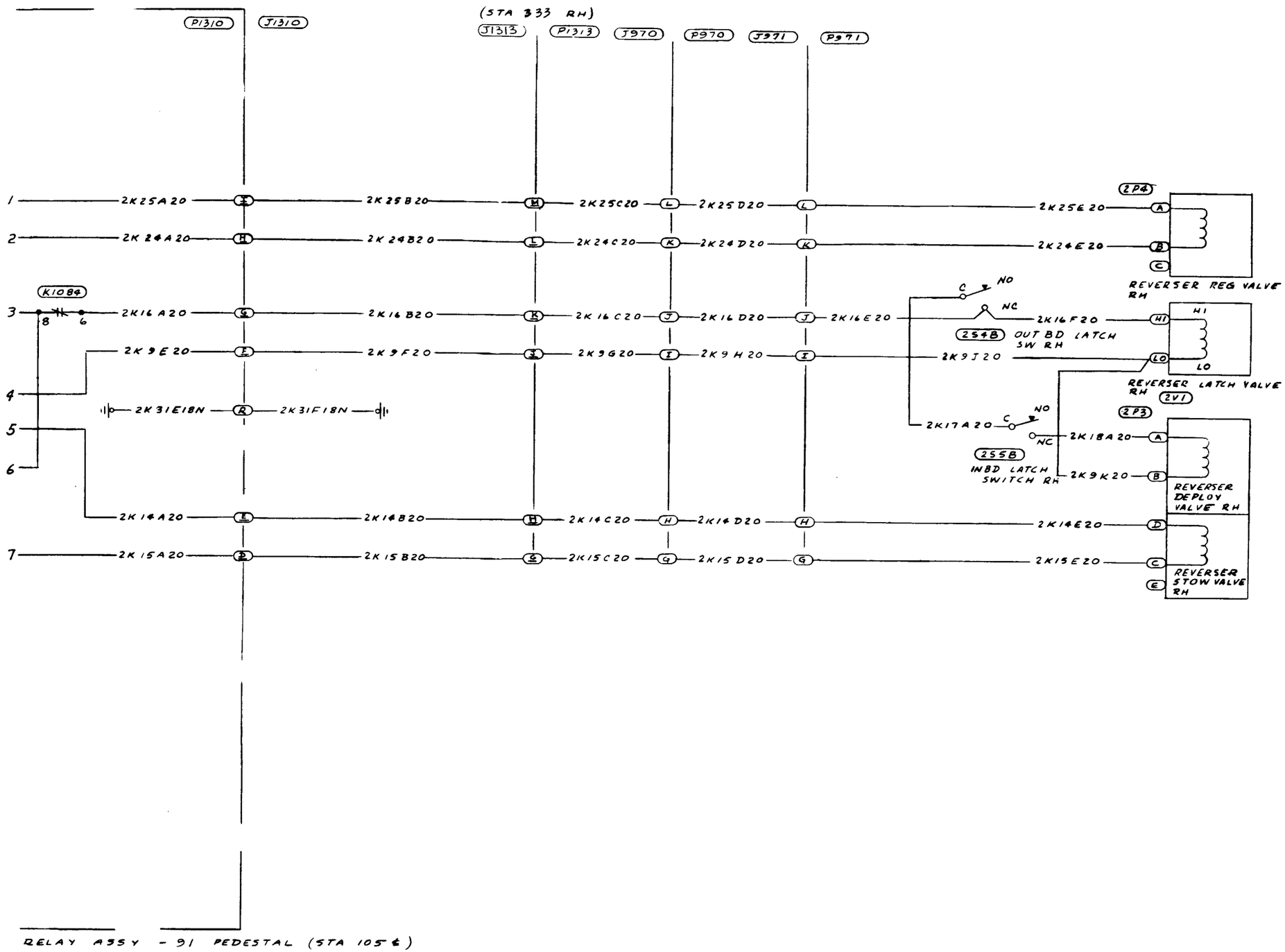

© COPYRIGHT, 1990 BY SABRELINER CORPORATION

RH ENGINE THRUST REVERSER CONTROL SYSTEM
S/N 380-5, -10, -12, & Subs changed by SOK 28
(Sheet 2 of 2)

4	3	2	1	K3.1-2

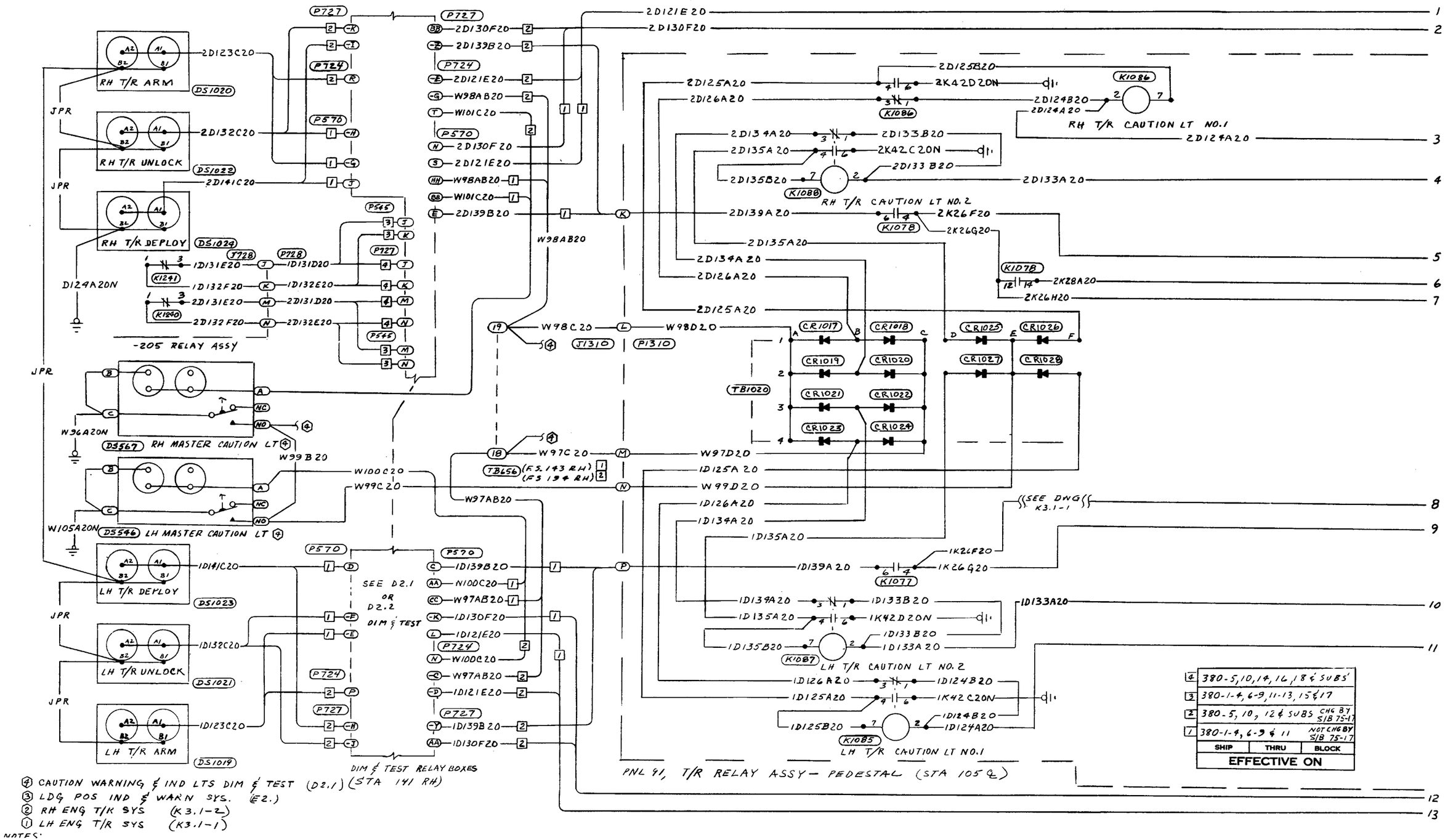

THRUST REVERSER INDICATING SYSTEM
(380-1 & Subs Not Changed by Optional Kit No. 28)
(Sheet 1 of 2)

© COPYRIGHT, 1981 BY ROCKWELL INTERNATIONAL

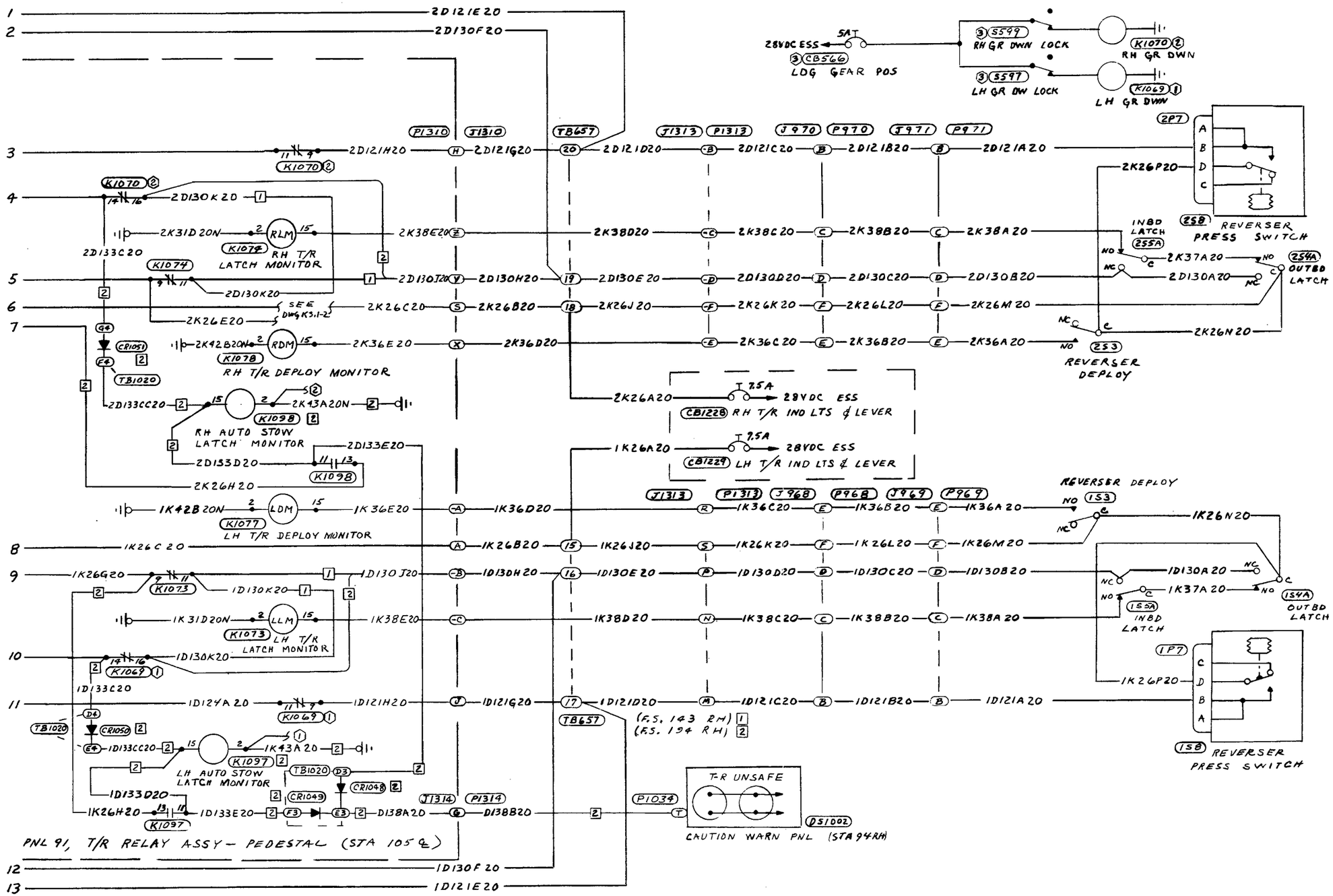

THRUST REVERSER INDICATING SYSTEM
(380-1 & Subs Not Changed by Optional Kit No. 28)
(Sheet 2 of 2)

© COPYRIGHT, 1981 BY ROCKWELL INTERNATIONAL

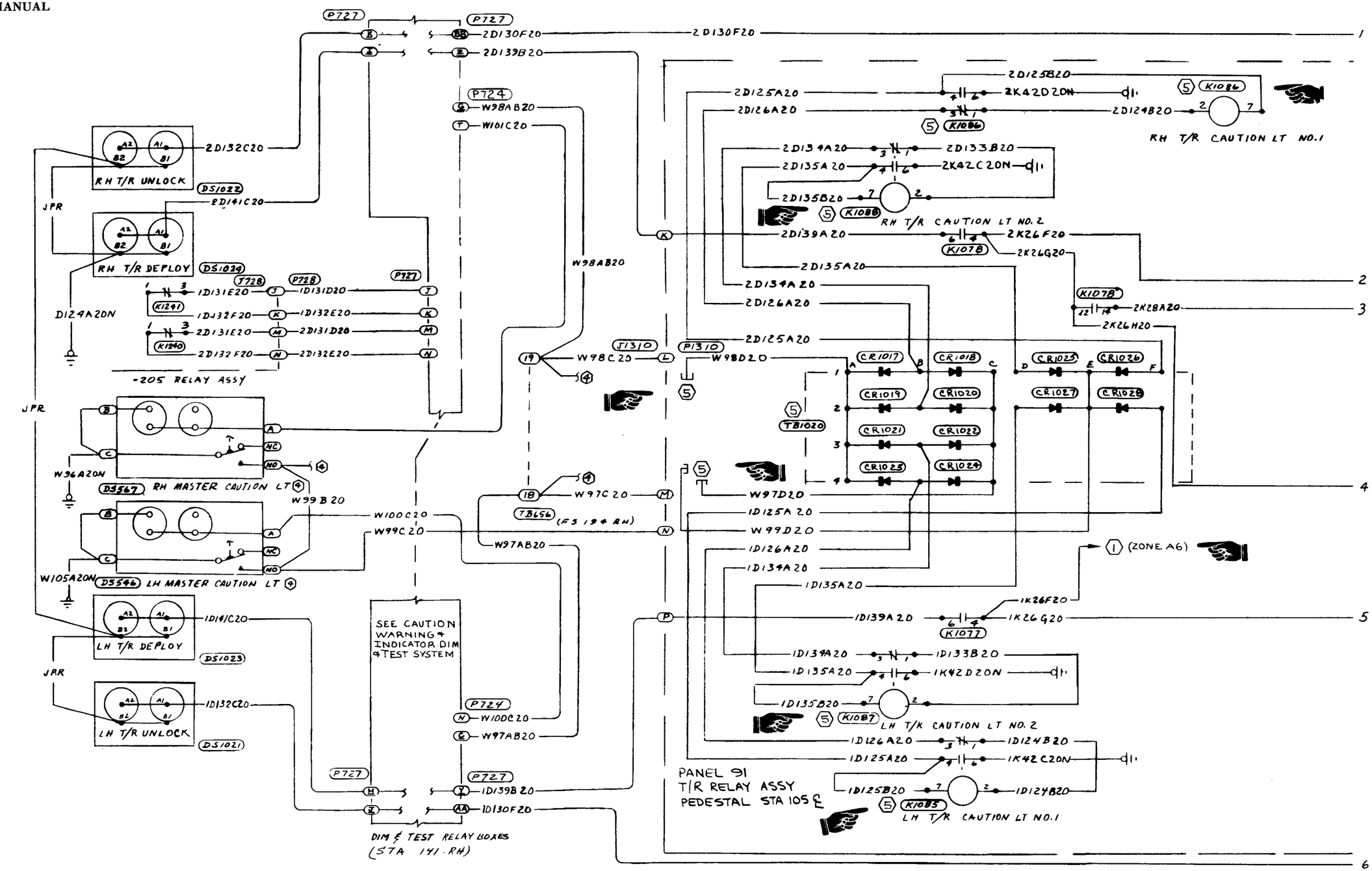

THRUST REVERSER INDICATING SYSTEM
S/N 380-5, -10, -12, & Subs changed by SOK 28
(Sheet 1 of 2)

© COPYRIGHT, 1990 BY SABRELINER CORPORATION

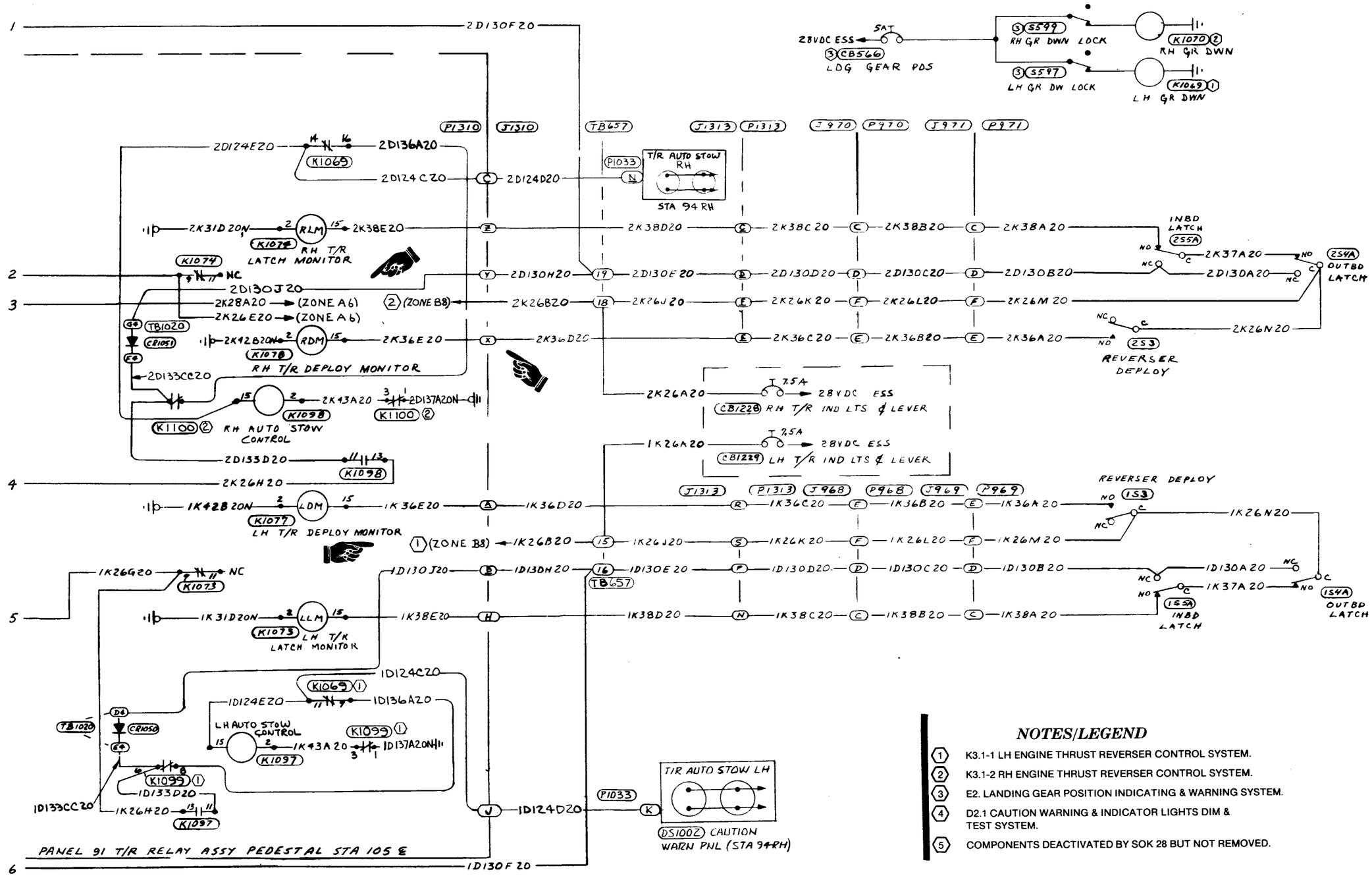

NOTES/LEGEND

1. K3.1-1 LH ENGINE THRUST REVERSER CONTROL SYSTEM.
2. K3.1-2 RH ENGINE THRUST REVERSER CONTROL SYSTEM.
3. E2. LANDING GEAR POSITION INDICATING & WARNING SYSTEM.
4. D2.1 CAUTION WARNING & INDICATOR LIGHTS DIM & TEST SYSTEM.
5. COMPONENTS DEACTIVATED BY SOK 28 BUT NOT REMOVED.

© COPYRIGHT, 1990 BY SABRELINER CORPORATION

CHAPTER

80

STARTING

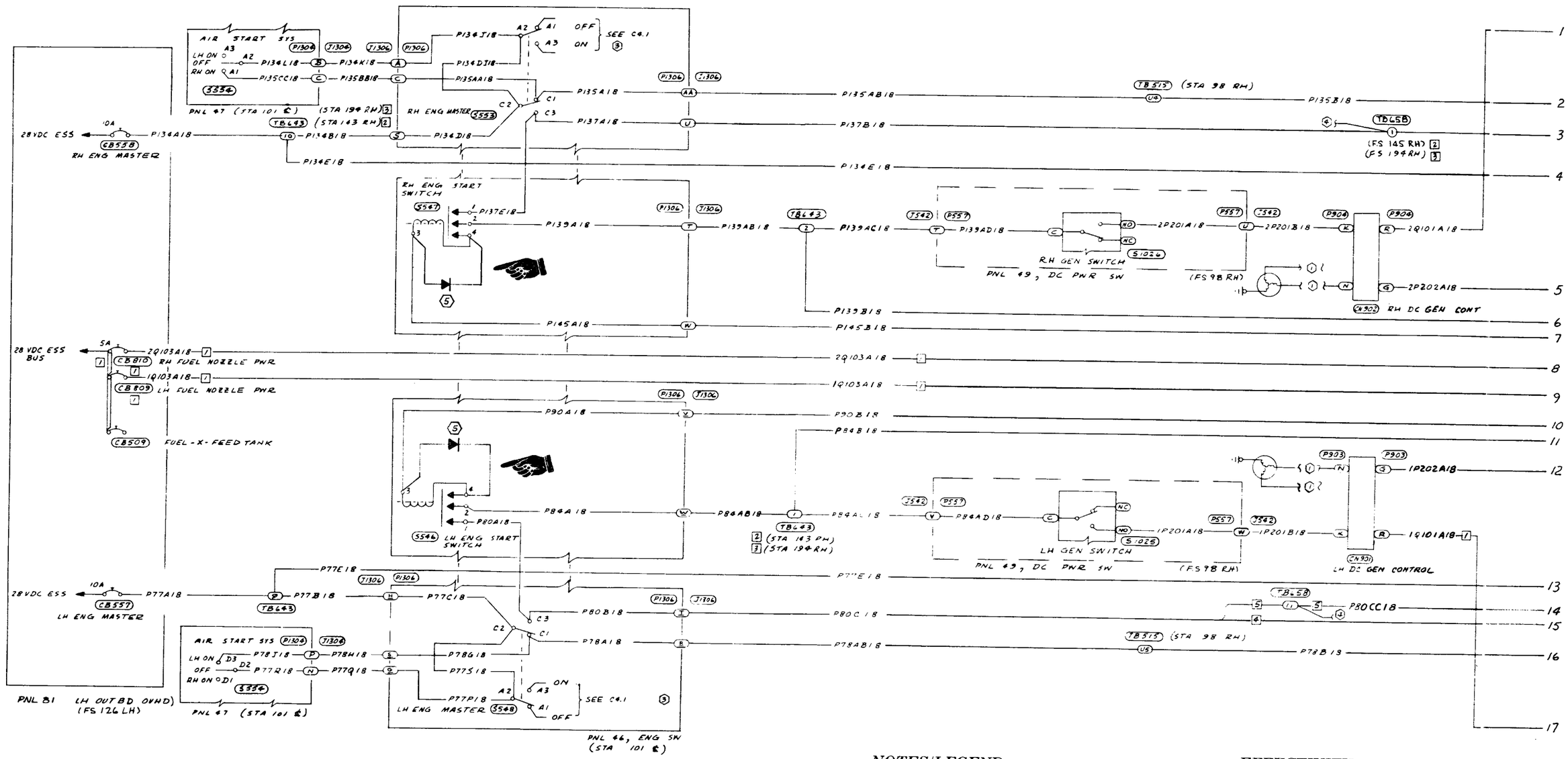

NOTES/LEGEND

1. B2.1 DC BUS TIE-IN SYSTEM
2. H4.1 ENGINE FIRE EXT SYSTEM
3. C4.1 FUEL SHUTOFF SYSTEM
4. C12.1 FUEL DRAIN SCAVENGING SYSTEM
5. DIODE 1N4007 INSTALLED IN AIRPLANES WITH S/L 81-12 ACCOMPLISHED

EFFECTIVITY

1. S/N 380-1 THRU -5
2. S/N 380-1 THRU -4, -6 THRU -9 & -11
3. S/N 380-5, -10, -12 & SUBS
4. 380-1 THRU -21, -23 & -25 EXCLUDING FAA AIRPLANES
5. S/N 380-22, -24, -26 & SUBS INCLUDING FAA AIRPLANES
6. S/N 380-66 & SUBS

ORIGINAL AS RECEIVED BY ATP

ENGINE START SYSTEM
S/N 380-1 & Subs Not Changed by SOK 17
(Sheet 1 of 2)

© COPYRIGHT, 1987 BY SABRELINER CORPORATION

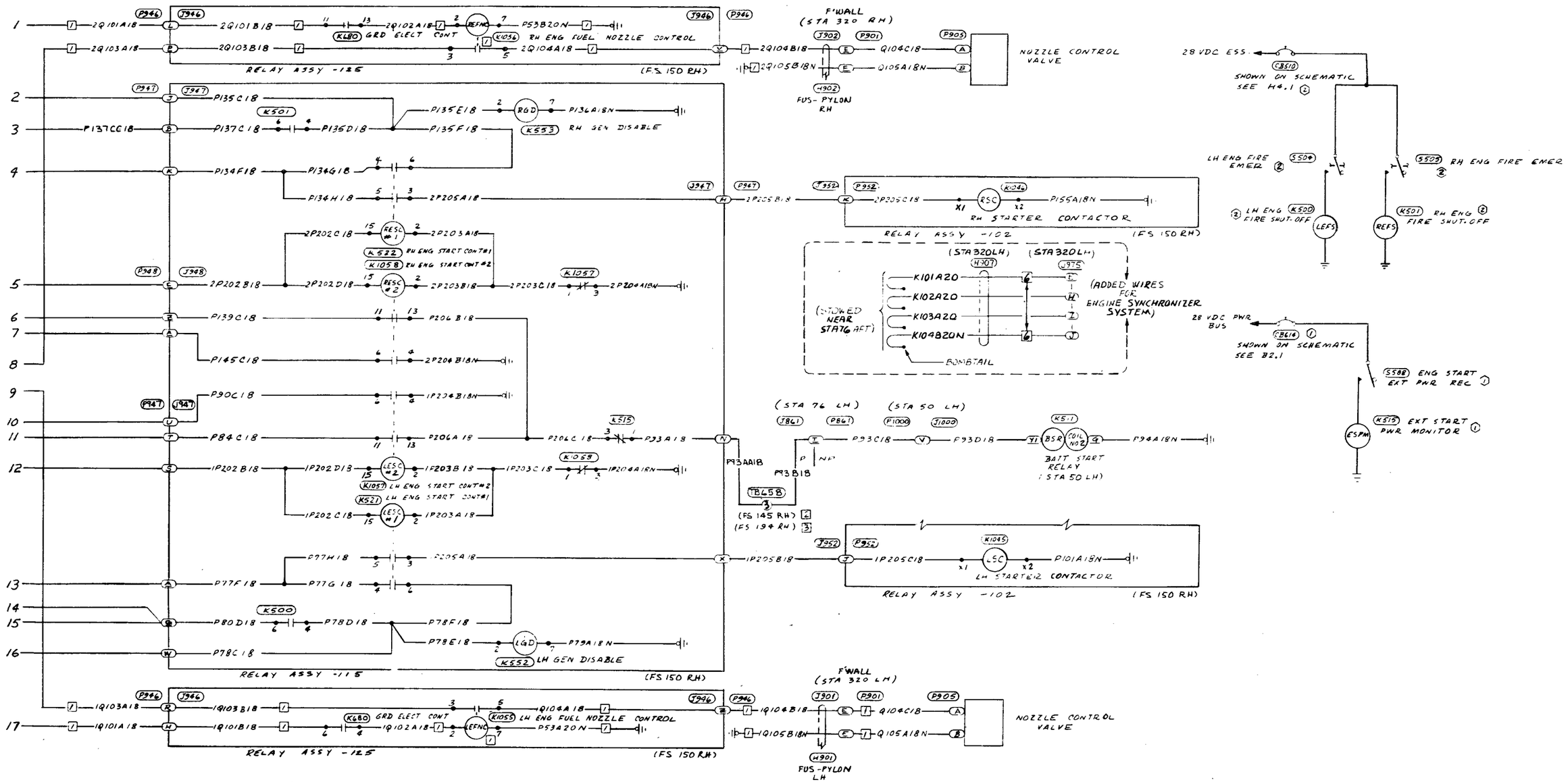

© COPYRIGHT, 1988 BY SABRELINER CORPORATION

ENGINE START SYSTEM
S/N 380-1 & Subs Not Changed by SOK 17
(Sheet 2 of 2)

4	3	2	1	C9.1

NOTES/LEGEND

1. B2.1 DC BUS TIE-IN SYSTEM
2. H4.1 ENGINE FIRE EXT SYSTEM
3. C4.1 FUEL SHUTOFF SYSTEM
4. C12.1 FUEL DRAIN SCAVENGING SYSTEM
5. C10.1 ENGINE IGNITION SYSTEM
6. ENERGIZED WITH RH ENGINE GENERATOR OPERATING
7. ENERGIZED WITH LH ENGINE GENERATOR OPERATING
8. ENERGIZED WITH APU OPERATING
9. SEE DC GENERATOR SYSTEM
10. DIODE 1N4007 INSTALLD IN AIRPLANES WITH S/L 81-12 ACCOMPLISHED

EFFECTIVITY

1. S/N 380-1 THRU -5
2. S/N 380-1 THRU -4, -6 THRU -9 & -11
3. S/N 380-5, -10, -12 & SUBS
4. S/N 380-1 THRU -21, -23 & -25 EXCLUDING FAA AIRPLANES
5. S/N 380-22, -24, -26 & SUBS INCLUDING FAA AIRPLANES
6. S/N 380-66 & SUBS

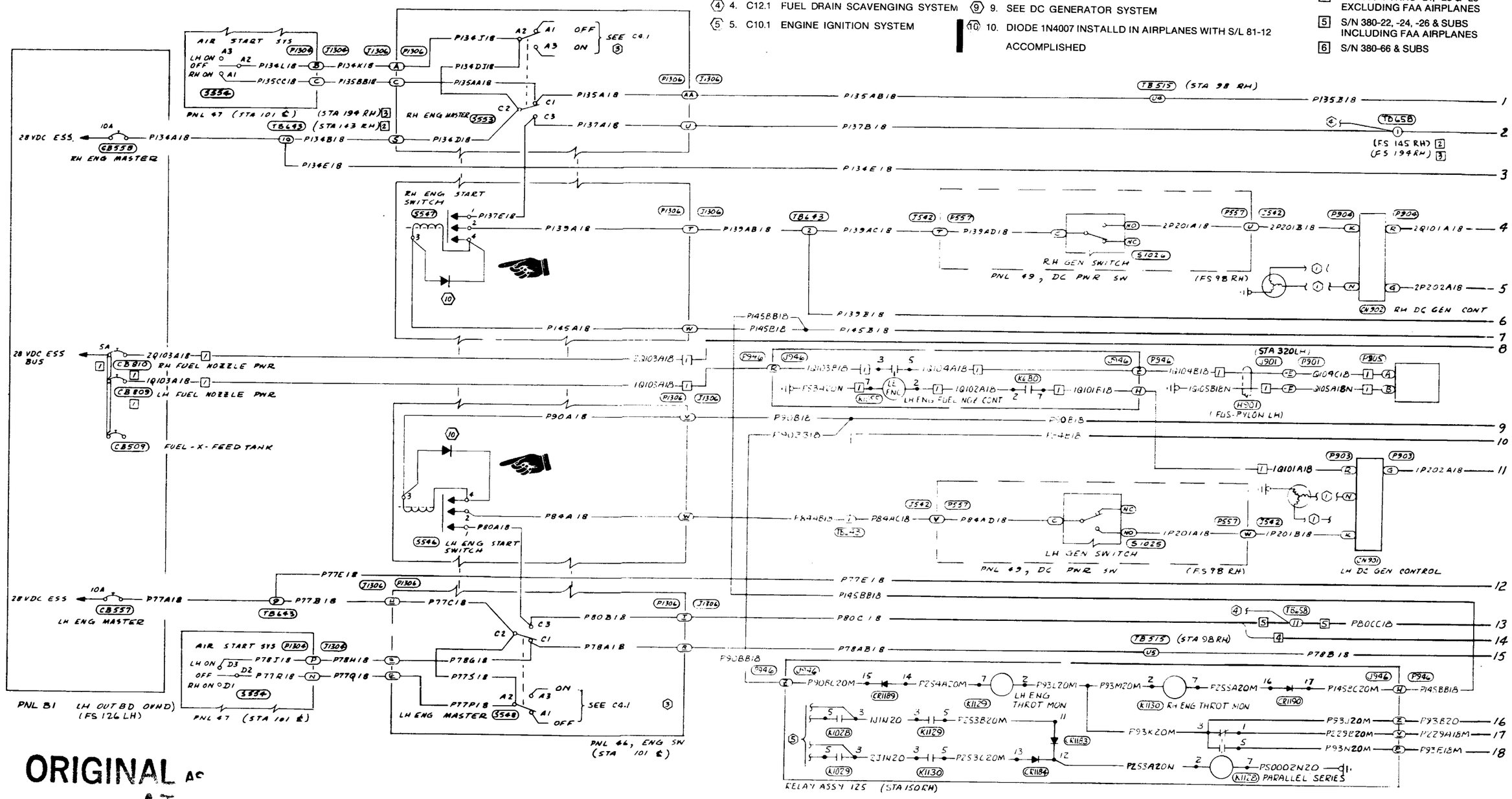

ORIGINAL

RECEIVED BY AT

ENGINE START SYSTEM
S/N 380-1 & Subs Changed by SOK 17
(Sheet 1 of 3)

© COPYRIGHT, 1987 BY SABRELINER CORPORATION

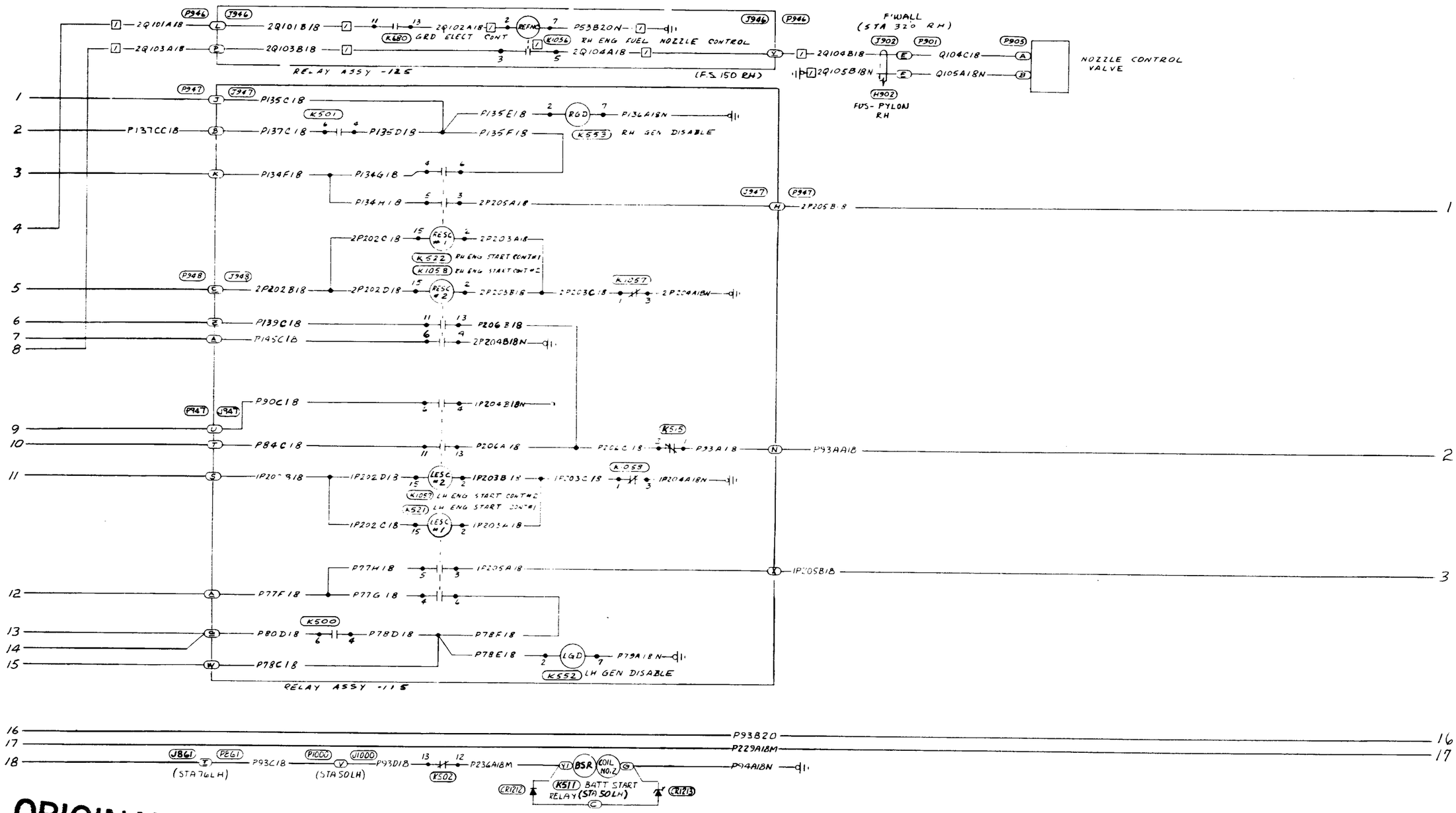

ORIGINAL AS
RECEIVED BY

© COPYRIGHT, 1987 BY SABRELINER CORPORATION

ENGINE START SYSTEM
S/N 380-1 & Subs Changed by SOK 17
(Sheet 2 of 3)

8 | 7 | 6 | 5 | C9.2

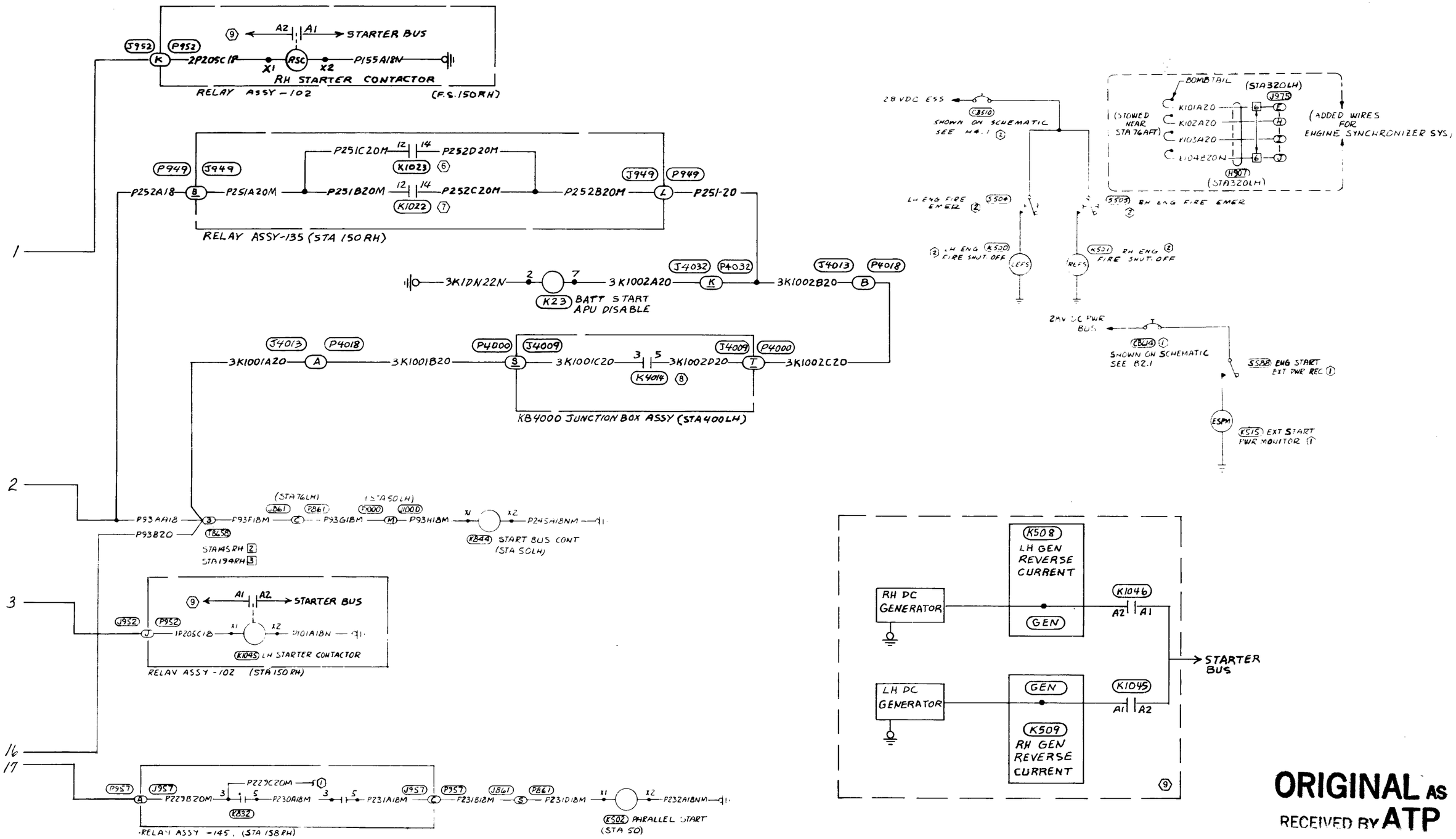

ORIGINAL AS RECEIVED BY ATP

© COPYRIGHT, 1987 BY SABRELINER CORPORATION

ENGINE START SYSTEM
S/N 380-1 & Subs Changed by SOK 17
(Sheet 3 of 3)